UCRL-52228

ANALYSIS OF WIRE ANTENNAS IN THE PRESENCE OF A CONDUCTING HALF SPACE: PART III - THE BURIED ANTENNA

E. K. Miller

F. J. Deadrick

CIRCULATION COPY
SUBJECT TO RECALL
IN TWO WEEKS

February 25, 1977

Prepared for U.S. Energy Research & Development Administration under contract No. W-7405-Eng-48

LAWRENCE LIVERMORE LABORATORY
University of California/Livermore

DISCLAIMER

This document was prepared as an account of work sponsored by an agency of the United States Government. Neither the United States Government nor the University of California nor any of their employees, makes any warranty, express or implied, or assumes any legal liability or responsibility for the accuracy, completeness, or usefulness of any information, apparatus, product, or process disclosed, or represents that its use would not infringe privately owned rights. Reference herein to any specific commercial product, process, or service by trade name, trademark, manufacturer, or otherwise, does not necessarily constitute or imply its endorsement, recommendation, or favoring by the United States Government or the University of California. The views and opinions of authors expressed herein do not necessarily state or reflect those of the United States Government or the University of California, and shall not be used for advertising or product endorsement purposes.

This report has been reproduced
directly from the best available copy.

Available to DOE and DOE contractors from the
Office of Scientific and Technical Information
P.O. Box 62, Oak Ridge, TN 37831
Prices available from (615) 576-8401, FTS 626-8401

Available to the public from the
National Technical Information Service
U.S. Department of Commerce
5285 Port Royal Rd.,
Springfield, VA 22161

Work performed under the auspices of the U.S. Department of Energy by Lawrence Livermore National Laboratory under Contract W-7405-ENG-48.

Distribution Category
UC-37

LAWRENCE LIVERMORE LABORATORY
University of California/Livermore, California/94550

UCRL-52228

ANALYSIS OF WIRE ANTENNAS IN THE PRESENCE OF A CONDUCTING HALF SPACE: PART III - THE BURIED ANTENNA

E. K. Miller

F. J. Deadrick

MS. date: February 25, 1977

Acknowledgment

The research in this report was supported by the Engineering Research Division of Lawrence Livermore Laboratory's Electronics Engineering Department, the Defense Nuclear Agency under Subtask R99QAXE B075, and the Advanced Research Projects Agency. The authors also acknowledge the assistance of LLL's D. L. Lager in performing the Sommerfeld computations.

Contents

Acknowledgment ii

Abstract 1

Introduction 1

Theoretical Formulation 2

Free Space 3

Lossy Ground — Sommerfeld Approach 5

Reflected Field 6

Transmitted Field 8

Lossy Ground — RCA and TCA Approach 8

Reflected Field 9

Transmitted Field 10

The Lossless Medium 10

The Lossy Medium 17

Special Problem Areas 20

Open-Ended Wire in a Lossy Medium 20

Wire Terminated at the Interface 22

Wire Penetrating the Interface 23

Generalization 25

Numerical Treatment 26

Ray Path Determination 26

Transmitted Field Evaluation 27

Numerical Results 30

Conclusion 33

References 35

ANALYSIS OF WIRE ANTENNAS IN THE PRESENCE OF A CONDUCTING HALF SPACE: PART III - THE BURIED ANTENNA

Abstract

This report extends an earlier one dealing with the reflection coefficient approximation (RCA) for modeling objects located near an interface between electrically different half spaces. We now describe the procedure to handle objects on opposite sides of the interface.

The method, which we denote as the transmission coefficient approximation (TCA), is based on a ray-optics formulation and an assumed reciprocity along a given ray path. An integral-equation, moment-method technique for wires, when combined with the RCA-TCA, permits modeling the response of antennas above ground to buried objects. Similar problems of geophysical interest, as well as those of the more conventional antenna interface, may also be modeled.

We present sample results to illustrate how the technique may be applied. A comparison of results is made between the RCA-TCA and those obtained from a rigorous treatment based on the Sommerfeld integrals to demonstrate the validity of the approximate approach. The approximate approach offers much greater efficiency (~50 times faster) relative to the rigorous approach.

Introduction

In a two-paper sequence, Miller et al.[1,2] analyzed vertical and horizontal wire antennas located over a homogeneous, finitely conducting half space. In this report, we will refer to these papers as I and II, respectively. The authors formulated the problem using both rigorous Sommerfeld theory, and a plane-wave reflection-coefficient approximation (RCA) to account for the interface-reflected field. In both cases, an integral equation was derived and numerically solved using a moment-method technique. The RCA produced input impedance values within 10% of those obtained from the rigorous theory for antennas whose centers are at least 0.1 λ above the interface. This finding indicated that the approximation could be exploited for many practical applications where the accuracy of the rigorous approach is not required. The resulting computer time savings would be in a factor $\gtrsim$100. Subsequent efforts to improve the efficiency of the rigorous calculation have

not been especially successful, so the ratio of the running times of the two approaches remains ~100 (Lytle and Lager).[3]

This being so, and because there is growing use of buried antennas and antennas in geophysical applications to detect subsurface objects, it seems worthwhile to extend the RCA to the latter areas. Since at its simplest this would involve approximating the fields transmitted across the interface in terms of a plane-wave transmission coefficient, we will call this the transmission-coefficient approximation (TCA). The purpose of this report is to develop the TCA and to demonstrate its application with numerical examples. In the first section we formulate the problem in terms of the rigorous Sommerfeld theory and the combined RCA-TCA. The numerical treatment used to solve the integral equations thus obtained is described in the next section. Finally, representative numerical results are presented.

Theoretical Formulation

It was convenient in the earlier papers I and II to begin the integral-equation development by considering first the case of an antenna located in free space. The analysis was then extended to the case of a perfectly conducting ground, and concluded with the lossy ground, using for the latter the rigorous Sommerfeld theory and the RCA. For simplicity, only the vertical antenna was dealt with in I and only the horizontal antenna in II, although the formulation for an arbitrary geometry, arbitrarily oriented antenna was also outlined in the appendix of II.

Here we want to formulate the problem of arbitrary geometry antennas located on opposite sides of the interface between free space and a lossy ground. While we might use an approach similar to that of I and II, first analyzing pairs of vertical, then horizontal, etc. antennas, the generality of the problem indicates that an alternate, more direct development would be better suited. Therefore, we will consider first the integral equation for two arbitrary-geometry wire antennas located in free space, and briefly outline the numerical treatment for its solution. Proceeding in the context of the integral-equation format, we next examine the modifications required to rigorously extend the integral equation for the same two antennas to the case where they are separated by the ground-free space interface. Next, the development of the TCA is presented and incorporated into the integral-equation

treatment. We continue by considering some special problems that arise in connection with antennas which terminate at, or penetrate, the interface. Finally, we conclude by generalizing the development to include an arbitrary number of antennas located on either side of, or penetrating, the interface.

FREE SPACE

Integral equations have become widely employed in electromagnetics in recent years as digital computers have increased in availability and capability. The use of integral equations to model wire-type structures numerically (where the maximum transverse dimension is small compared with the wire length and wavelength) has become quite commonplace. Numerous integral-equation types and numerical treatments have been developed for the wire problem. The one we choose to employ here is based upon a thin-wire approximation to the electric-field integral equation (Poggio and Miller).[4]

An integral equation in electromagnetics is a mathematical statement of boundary conditions of electric and/or magnetic fields in terms of integrals over unknown sources and a specified exciting field. For two perfectly conducting thin wires, it may be simply expressed as

$$\bar{E}^A(\bar{r})\Big|_{\text{Tangential}} = \hat{s}(\bar{r}) \cdot \bar{E}^A(\bar{r}) = -\bar{E}^I(\bar{r})\Big|_{\text{Tangential}} = \hat{s}(\bar{r}) \cdot \bar{E}^I(\bar{r});\ \bar{r} \in C(\bar{r}), \tag{1a}$$

where $\bar{E}^A$ and $\bar{E}^I$ are the applied or exciting field, and induced field, respectively, $\hat{s}$ is a unit tangent vector at $\bar{r}$, and $C(\bar{r}) = C_1(\bar{r}) + C_2(\bar{r})$ is the contour of the two antennas. The induced field for the free-space case consists of two contributions, a self term $\bar{E}^S$ due to currents on that part of $C(\bar{r})$ on which $\bar{r}$ is located, and a mutual term $\bar{E}^M$ due to the remainder of $C(\bar{r})$. It can thus be written

$$\bar{E}^I(\bar{r}) = \bar{E}^S(\bar{r}) + \bar{E}^M(\bar{r});\ \bar{r} \in C(\bar{r}), \tag{1b}$$

where for free space

$$\bar{E}^S(\bar{r}) = \bar{E}^{SD}(\bar{r})$$

$$\bar{E}^M(\bar{r}) = \bar{E}^{MD}(\bar{r}),$$

with $\bar{E}^{SD}$ and $\bar{E}^{MD}$ the direct self and mutual fields, respectively, to differentiate them from reflected or transmitted field contributions, which are considered later.

In general, the field of a current I on a given contour $C(\bar{r})$ can be expressed as

$$\bar{E}(\bar{r}) = \frac{i\omega\mu_o}{4\pi} \int_{C(\bar{r})} I(w')\ \bar{G}(\bar{r},w')\ dw', \tag{1c}$$

with

$$\bar{G}(\bar{r},w') = \left[w' + \frac{1}{k^2}\nabla\frac{\partial}{\partial w'}\right] g = \bar{G}^D(\bar{r},w'w') = \bar{G}^M(\bar{r},w'), \tag{2}$$

$$g = g_D = \exp\ (-ikR)/R$$

$$R = \sqrt{|\bar{r} - \bar{r}'(w')|^2 + a^2(\bar{r}')},$$

where $k = \omega\sqrt{\mu_o\varepsilon_o}$ is the wave number for free space, $a(\bar{r})$ is the wire radius at $\bar{r}$, and the exp $(i\omega t)$ time variation has been suppressed. Note that the Green's function for the self and mutual fields is the same for free space.

By definition then, if $\bar{r}_i \in C_i(\bar{r})$, where the subscript thus indicates the wire on which $\bar{r}$ is located, the self field is written

$$\bar{E}^{SD}(\bar{r}_i) = \frac{i\omega\mu_o}{4\pi} \int_{C_i(\bar{r})} I(w')\ \bar{G}^D(\bar{r}_i,w')\ dw' = \bar{E}^{SD}_{ii}\ . \tag{3a}$$

The mutual field becomes

$$\bar{E}^{MD}(\bar{r}_i) = \frac{i\omega\mu_o}{4\pi} \int_{C_j(\bar{r})} I(w')\ \bar{G}^D\ (\bar{r}_i,w')\ dw' = \bar{E}^{MD}_{ij}\ , \tag{3b}$$

where $i,j = 1,2\ i \neq j$, the first subscript indicates the observation wire and the second denotes the source wire. Here and further on, we use a prime to signify a source-related quantity, while observation variables are those without primes.

The numerical solution of Eq. (1) for the unknown currents is achieved using the moment method that results in replacing the integral equation by a linear system, which can then be handled using standard matrix techniques.

This procedure involves representing a given wire contour with a piece-wise linear approximation. On each piece or segment used to model $C(\bar{r})$, a three-term (constant, sine, and cosine) basis function is used for the current. An extrapolation procedure reduces the number of unknowns associated with the current basis to one per segment. By further employing delta-function weights to point match the integral equation, a linear system is obtained whose order equals the number of segments used to model the total wire contour. The method used is known as subsectional collocation. The applied field in Eq. (1) could be due to an incident-plane wave, a nearby point source, or a local generator. In the latter case, the one of interest here, we have

$$\bar{E}^A(s) \approx -V^A\hat{s}/\Delta,$$

where Δ is the length of the segment to which the generator is connected, and V^A is the generator voltage. Alternate source models may also be used (Miller and Deadrick).[5]

LOSSY GROUND — SOMMERFELD APPROACH

The integral equation in Eq. (1) provides the framework to extend the treatment to the problem where the two antennas are located on opposite sides of an interface. Let the interface be defined by the Z = 0 plane in a Cartesian coordinate system. Although we are most interested in a free-space upper medium, for generality denote where necessary with +, and - subscripts those quantities that are medium dependent. We can still use Eq. (1), but now the self and mutual terms become

$$\bar{E}^S(\bar{r}_i) = \bar{E}^{SD}(\bar{r}_i) + \bar{E}^{SR}(\bar{r}_i) \equiv \bar{E}^{SD}_{ii} + \bar{E}^{SR}_{ii} \tag{4a}$$

and

$$\bar{E}^M(\bar{r}_i) = \bar{E}^{MT}(\bar{r}_i) = \bar{E}^{MT}_{ij};\ i,j = 1,2;\ 1 \neq j \tag{4b}$$

where $\bar{E}^{SD}$ and $\bar{E}^{SR}$ are the direct and interface-reflected self fields, and $\bar{E}^{MT}$ is the mutual field transmitted across the interface.

Both the reflected and transmitted fields involve the Sommerfeld integrals when written in rigorous form. Note also that a separate Green's function can be associated with each field term included in Eq. (4), as shown further on, where the reflected and transmitted fields are considered in turn. The direct self field is of course that just given for free space.

Reflected Field

The general form of the Green's function for the field reflected from the interface has already been indicated in II. It is convenient to write it as a sum of the field reflected from a perfectly conducting ground (the image) and a correction term that accounts for the finite conductivity of the ground. The reflected self term Green's function then becomes

$$\bar{G}(\bar{r},w') = \bar{G}^{SR}(\bar{r},w') = \bar{G}^{I}(\bar{r}^*,w^*) + \bar{G}^{SO}(\bar{r},w'), \tag{5}$$

where

$$\bar{G}^{I}(\bar{r}^*,w^*) = \left(\hat{w}^* + \frac{1}{k'^2}\nabla\frac{\partial}{\partial w^*}\right) g_i,$$

$$g_i = \exp\left(-ik'R^*\right)/R^*,$$

$$R^* = \sqrt{|\bar{r} - \bar{r}^*(w^*)|^2 + a^2(\bar{r}^*)},$$

$$\bar{r}^*(x', y', z') = \bar{r}'(x', y', -z'), \tag{6}$$

with the source medium parameters denoted by primes, and where $\hat{w}^*$ is a unit vector in the direction of the image current. Also

$$\bar{G}'^{SO}(\bar{r},w') = \left[\left(\hat{z} + \frac{1}{k'^2}\nabla\frac{\partial}{\partial z}\right)(\sin\beta' g_{sHz} - \cos\beta' g_{sVz}) + \left(\hat{s}' + \frac{1}{k'^2}\nabla\frac{\partial}{\partial s'}\right)\sin\beta' g_{sHs}\right], \tag{7a}$$

with the superscript SO denoting the Sommerfeld correction, and where

$$g_{sHs} = 2\int_0^\infty \frac{\lambda}{\mu_+ + \mu_+} J_o(\lambda\rho')\, e^{-\mu'|z'+z|}\, d\lambda, \tag{7b}$$

$$g_{sHz} = \frac{\cos('\phi - \phi')}{K_o^2} \int_0^\infty \frac{\mu_+ - \mu_-}{\varepsilon_+\mu_- + \mu_+\varepsilon_-} J_o'(\lambda\rho')\, e^{-\mu'|z+z'|}\, \lambda^2\, d\lambda\ , \tag{7c}$$

and

$$g_{sVz} = 2\varepsilon' \int_0^\infty \frac{\mu}{\varepsilon_+\mu_- + \mu_+\varepsilon_-} J_o(\lambda\rho')\, e^{-\mu'|z+z'|}\, \frac{\lambda}{\mu'}\, d\lambda \tag{7d}$$

are the Sommerfeld integrals, with the H and V subscripts indicating horizontal or vertical components of the incremental current moment Idw', and the s and z the corresponding hertz vector component. In addition,

$$\lambda^2 = \mu_\pm^2 - k_\pm^2\ ,$$

$\hat{s}'$is a unit vector on the interface in the $\hat{w}$ direction, J_o is a Bessel function of order zero, and α' and β' are the direction cosines of $\hat{w}'$. Thus, we have

$$\hat{w}' = \hat{z}\cos\beta' + \sin\beta'(\hat{x}\cos\alpha' + \hat{y}\sin\alpha'),$$

and

$$\phi' = \tan^{-1}[(y - y')/(x - x')],\ \rho' = \sqrt{(x - x^1)^2 + (y - y^1)^2}\ ,$$

where primed coordinates are source points, and unprimed coordinates are observation points. The parameters of the upper and lower media are indicated by + and - subscripts, respectively, while those associated with the source medium are primed, and those associated with the observation medium are unprimed. Furthermore, note that in general

$$\varepsilon = \varepsilon_0\left(\varepsilon_R + \frac{\sigma}{i\omega\varepsilon}\right)\ .$$

Transmitted Field

The transmitted field Green's function contains no direct or reflected components, and in a rigorous formulation then involves only Sommerfeld integrals. These are very similar to those already given for the reflected field Sommerfeld correction terms, and take the following form:

$$\bar{G}(\bar{r},w') = \bar{G}^{MT}(\bar{r},w'),$$

and

$$\bar{G}^{MT}(\bar{r},w') = \left\{\left[\hat{z} + \frac{1}{k'^2}\nabla\frac{\partial}{\partial z}\right]\left(\sin\beta'\, g^T_{sHz} - \cos\beta'\, g^T_{sHz}\right)\right.$$

$$\left. + \left[s' + \frac{1}{k'^2}\nabla\frac{\partial}{\partial s'}\right]\sin\beta'\, g^T_{sHs}\right\}, \tag{8a}$$

where the superscript T denotes the transmitted field component and

$$g^T_{sHs} = 2\int_0^\infty \frac{\lambda}{\mu_- + \mu_+} J_o(\lambda\rho')e^{-\mu'|z'|-\mu|z|}\, d\lambda \tag{8b}$$

$$g^T_{sHz} = \frac{2\cos(\phi' - \alpha')}{k_0^2}\int_0^\infty \frac{\mu_+ - \mu_-}{\varepsilon_+\mu_- + \mu_+\varepsilon_-} J_0'(\lambda\rho')\, e^{-\mu'|z'|-\mu|z|}\, \lambda^2 d\lambda \tag{8c}$$

$$g^T_{sVz} = 2\,\varepsilon\int \frac{\lambda}{\varepsilon_-\mu_+ + \varepsilon_+\mu_-} J_o(\lambda\rho')\, e^{-\mu'|z'|-\mu|z|}\, d\lambda \tag{8d}$$

LOSSY GROUND — RCA AND TCA APPROACH

We again write the integral equation as given in the foregoing Sommerfeld approach, but to explicitly indicate use of the RCA and TCA we use a circumflex on each field term affected by the approximation. Equation (4) is thus written

$$\bar{E}^S(\bar{r}_i) \approx \hat{\bar{E}}^S(\bar{r}_i) = \bar{E}^{SD}(\bar{r}_i) + \hat{\bar{E}}^{SR}(\bar{r}_i) \equiv \bar{E}^{SD}_{ii} + \hat{\bar{E}}^{SR}_{ii} \tag{4a}$$

$$\bar{E}^M(\bar{r}_i) \approx \hat{\bar{E}}^M(\bar{r}_i) = \hat{\bar{E}}^{MT}(\bar{r}_i) \equiv \hat{\bar{E}}^{MT}_{ij}\ ;\ i,j = 1,2;\ i \neq j. \tag{4b}$$

As before, we find it convenient to treat the reflected and transmitted fields separately. Also, the direct self term remains that for free space.

Reflected Field

The Green's function for the reflected self term can be written

$$\bar{G}(\bar{r},w') \approx \tilde{\bar{G}}^{SR}(\bar{r},w'),$$

where $\tilde{\bar{G}}^{SR}$ is now responsible for the entire interface-reflected field. It may be derived by noting that the RCA involves using

$$\bar{E}^{SR}(\bar{r}_i) \approx \tilde{\bar{E}}^{SR}(\bar{r}_i) = \bar{\bar{R}} \cdot \bar{E}^{I}(\bar{r}_i), \tag{9a}$$

where $\bar{E}^{I}$ is the image field for a perfectly reflecting interface, and $\bar{\bar{R}}$ is a reflection coefficient matrix of the form

$$\bar{\bar{R}} = \hat{\rho}\hat{\rho}R_M + \hat{\phi}\hat{\phi}\, R_E + \hat{z}\hat{z}R_M \ . \tag{9b}$$

The Fresnel plane-wave reflection coefficients for transverse electric (TE) and transverse magnetic (TM) polarizations are given by R_E and R_M evaluated at the specular reflection point for a reflected ray connecting the source and observation points. They have the form

$$R_M = \frac{\varepsilon_{\pm}u_{\mp} - \varepsilon_{\mp}u_{\pm}}{\varepsilon_{+}u_{-} + \varepsilon_{-}u_{+}}$$

$$R_E = \frac{u_{\mp} - u_{\pm}}{u_{+} - u_{-}} ,$$

where

$$u_{\pm} = k_{\pm} \cos \theta_{\pm},$$

with θ the angle with respect to the surface normal of the incident ray.

The unit vectors $\hat{\rho},\hat{\phi}$ and $\hat{z}$ are referred to the vertical (incidence) plane containing the ray path. Now $\bar{E}^{I}$ has the image Green's function as just given:

$$\bar{G}^{I}(\bar{r}^{*},w^{*}) = \left[\hat{w}^{*} + \frac{1}{k'^{2}} \nabla \frac{\partial}{\partial w^{*}}\right] g_{i},$$

so that

$$\tilde{\bar{G}}^{SR}(\bar{r},w') = \bar{\bar{R}} \cdot \bar{G}^{I}(\bar{r}^{*},w^{*}),$$

which completes the RCA treatment of the reflected field.

Transmitted Field

The TCA to the transmitted field $\tilde{\bar{E}}^{MT}$ can also be formulated in terms of a Green's function and a transmission coefficient matrix $\bar{\bar{T}}$ as

$$\bar{E}^{MT}(\bar{r}_{i}) \approx \tilde{\bar{E}}^{MT}(\bar{r}_{i}) = \bar{\bar{T}} \cdot \bar{E}^{D}(\bar{r}_{i}),$$

and

$$\bar{G}(\bar{r},w') = \bar{G}^{MT}(\bar{r},w') \approx \tilde{\bar{G}}^{MT}(\bar{r},w'),$$

where

$$\tilde{\bar{G}}^{MT}(\bar{r},w') = \bar{\bar{T}} \cdot \bar{G}^{D}(\bar{r},w'). \tag{10}$$

Here $\bar{G}^{D}$ provides the field at some convenient point in a infinite medium having the source-medium parameters, and $\bar{\bar{T}}$ transforms it into the transmitted field in the observation medium at the point of interest.

The matrix $\bar{\bar{T}}$ must then account for: 1) the reflection loss of the field across the interface; 2) the refraction of the transmitted field, which causes an apparent shift in the source position and a consequent change in the geometric spreading of a ray tube; and 3) the different wave numbers of the source and observation medium. An approach based upon field terms varying only as 1/R and restricted for the moment to lossless media will be described.

The Lossless Medium

Consider a point source s_{-} located at $(0,0,-z')$ in a Cartesian coordinate system in which the interface is the $z = 0$ plane, and a ray emitted by the

source that intercepts the interface at an angle θ_- and is transmitted through the interface at an angle θ_+, with respect to the z axis as shown in Fig. 1(a). From Snell's Law we have

$$k_- \sin \theta_- = k_+ \text{ som } \theta_+,$$

so that θ_+ can be readily obtained from the medium parameters. Furthermore, note that

$$\frac{d\theta_-}{d\theta_+} = \frac{k_+ \cos\theta_+}{k_- \cos\theta_-} ,$$

a result subsequently needed.

We wish now to approximate the field E_+^{MT} in the direction θ_+ in the upper medium, for a lower medium source in terms of the infinite medium field E_-^D in the direction θ_-, the interface transmission coefficients, and the ray-tube divergence discontinuity due to refraction at the interface. The latter two effects may be conveniently accounted for by equating ray-optics expressions for the upper and lower medium fields at the ray intersection point with the interface. If the field amplitude is inversely proportional to distance, and undergoes a phase change proportional to distance measured in wavelengths in the medium through which it is propagating, then

$$E_-^D(R_-') = C_- \sqrt{\frac{A_-(R_-)}{A_-(R_-')}} \; e^{-ik_-(R_-'-R_-)} , \tag{11a}$$

and

$$E_+^D(R_+'') = C_+ \sqrt{\frac{A_+(r_-)}{A_+(r_- + R_+'')}} \; e^{-ik_+(R_+'')} \tag{11b}$$

where for convenience we have referred E_+^D and E_-^D to their corresponding interface values C_+ and C_-, with $A_-(R_-)$ and $A_+(r_-)$ their respective ray-tube areas. R_-' is measured from the source point and R_+'' from the point of refraction at the interface along the lines $\bar{r}_-$ and $\bar{r}_+$, respectively, and represent observation points of arbitrary location.

Note then that the geometric attenuation of the field, due to the ray-tube spreading, is accounted for by the square-root terms in Eq. (11). The phase change is similarly accounted for by the exponential factors. These amplitude

and phase corrections are normalized with respect to the interface field value, and are written for a propagating wave in an infinite medium. They do not, as previously mentioned, apply to other than 1/R terms.

Since we have

$$C_+ = T_{+-} C_- \ ,$$

where T_{+-} is the transmission coefficient for the upward direction, we obtain

$$E_+^{MT}(R''_+) = \sqrt{\frac{A_+(r_-)}{A_+(r_- + R''_+)}} \sqrt{\frac{A_-(R'_-)}{A_-(R_-)}}\, e^{-[-ik_-(R'_- - R_-) + ik_+ R''_+]} \cdot T_{+-} E_-^D(R'_-) \qquad (12)$$

The ray-tube area for the source medium field has the form

$$A_-(R'_-) = (R'_- \Delta\theta_-)(R'_- \sin\theta_- \Delta\phi_-) = A_{\theta-} A_{\phi-} \ ,$$

while that for the upper medium field is given by

$$A_+(r_- + R''_+) = [(R''_+ + r_-)\Delta\theta_+][(R_- \sin\theta_- + R''_+ \sin\theta_+)\ \Delta\phi_+]$$

$$= A_{\theta+}\ A_{\phi+} \ ,$$

where $\Delta\theta_\pm$, $\Delta\phi_\pm$ are the angular intervals subtended by the two tubes. Note that the refracted ray lies in the same vertical plane with respect to the interface as the incident ray, so that

$$\Delta\phi_- = \Delta\phi_+ = \Delta\phi .$$

The ray-tube area ratios can now be written as

$$\frac{A_+(r_-)}{A_+(r_- + R''_+)} = \frac{r_- R_- \sin\theta_-}{(R''_+ + r_-)(R_- \sin\theta_- + R''_+ \sin\theta_+)}, \qquad (13a)$$

and

$$\frac{A_-(R'_-)}{A_-(R_-)} = \frac{R_-'^2}{R_-^2} \ . \qquad (13b)$$

At the interface where $R_-' = R_-$ and $R_+'' = 0$, the two ray-tube projections on the interface must be equal because of continuity of power flow. Upon expressing the length X in Fig. 1 in terms of R_- and r_-, we find

$$\frac{R_-\Delta\theta_-}{\cos\theta_-} = \frac{r_-\Delta\theta_+}{\cos\theta_+} ,$$

$$r_- = R_- \frac{\cos\theta_+}{\cos\theta_-} \frac{d\theta_-}{d\theta_+} = \frac{\cos^2\theta_+}{\cos^2\theta_-} \frac{k_+}{k_-} .$$

Consequently,

$$E_+^{MT}(R_+') = \frac{R_-'T_{+-}\, e^{-i[k_+R_+''-k_-(R_-'-R_-)]}}{\sqrt{(R_- + R_+''\sin\theta_+/\sin\theta_-)(R_- + R_+''M)}}\, E_-^D(R_-') , \tag{14}$$

where

$$M = \frac{\cos^2\theta_-\ \sin\theta_+}{\cos^2\theta_+\ \sin\theta_-} .$$

Equation (14) then approximates the field in the (+) medium at an arbitrary distance R_+'' from the point of refraction at the interface in the direction θ_+ along the ray in terms of the source field in the (-) medium evaluated at an arbitrary distance R_-' in the direction θ_-. The R_-' term in the numerator normalizes $E_-(R_-')$ to its value at R_-', the denominator accounts for the modified ray-tube divergence in the (+) medium, and the exponential term corrects for the difference in phase shift in the two media.

To complete the TCA development, we require the polarization-dependent components of T_{+-}. These are given[6] by

$$T_{M+-}^V = \frac{2\,\varepsilon_-u_-}{\varepsilon_-u_+ + \varepsilon_+u_-} \tag{15a}$$

$$T_{M+-}^H = 2\,\frac{\varepsilon_-u_+}{\varepsilon_-u_+ + \varepsilon_+u_-} \tag{15b}$$

$$T_{E+-} = 2\,\frac{u_-}{u_+ + u_-} , \tag{15c}$$

where

$$u_{\pm} = k_{\pm} \cos\theta_{\pm} = \sqrt{k_{\pm}^2 - k_{-}^2 \sin^2\theta_{-}} \ ,$$

and where the E and M subscripts denote the TE and TM polarizations, and the H and V superscripts indicate the horizontal and vertical components of electric field relative to the interface.

Upon letting

$$f_d = [(R_- + R_+'' \sin\theta_+/\sin\theta_-)(R_- + R_+''M)]^{-1/2}, \tag{16}$$

and

$$f_\phi = \exp\left\{-i\ [k_+R_+'' - k_-(R_-' - R_-)]\right\} \ .$$

we can write the TE(E_{E+}^{MT}), and TM($E_{M+}^{MT,H}$, and $E_{M+}^{MT,V}$) components of the field transmitted to the upper medium as

$$E_{E+}^{MT}(R_+'') = 2\,\frac{u_-}{u_+ + u_-}\ f_d R_-' f_\phi\ E_{E_-}^{D}(R_-') \ , \tag{17a}$$

$$E_{M+}^{MT,V}(R_+'') = 2\,\frac{u_-\varepsilon_-}{\varepsilon_- u_+ + \varepsilon_+ u_-}\ f_d R_-' f_\phi\ E_{M-}^{D,V}(R_-'), \tag{17b}$$

$$E_{M+}^{MT,H}(R_+'') = 2\,\frac{u_+\varepsilon_-}{\varepsilon_- u_+ + \varepsilon_+ u_-}\ f_d R_-' f_\phi\ E_{M-}^{D,H}(R_-') \ . \tag{17c}$$

The foregoing treatment has dealt with a (-) medium source and (+) medium observation point. Their interchange [see Fig. 1(b)] leads to exactly analogous equations with the result that in general

$$\bar{E}_{\pm}^{MT}(R_{\pm}'') = \bar{\bar{T}}_{\pm\mp} \cdot \bar{E}_{\mp}^{D}(R_{\mp}') \ , \tag{18a}$$

where

$$\bar{\bar{T}}_{\pm\mp} = \hat{\rho}\hat{\rho}\ \tilde{T}_{M\pm\mp}^{H} + \hat{\phi}\hat{\phi}\ \tilde{T}_{E\pm\mp} + \hat{z}\hat{z}\ \tilde{T}_{M\pm\mp}^{V}, \tag{18b}$$

$$\tilde{T}_{E\pm\mp} = T_{\pm\mp}\, 2\, \frac{u_{\mp}}{u_+ + u_-}, \tag{18c}$$

$$\tilde{T}^{V}_{M\pm\mp} = T_{\pm\mp}\, 2\, \frac{\varepsilon_{\mp} u_{\mp}}{\varepsilon_- u_+ + \varepsilon_+ u_-}, \tag{18d}$$

$$T^{H}_{M\pm\mp} = T_{\pm\mp}\, 2\, \frac{\varepsilon_{\mp} u_{\pm}}{\varepsilon_- u_+ + \varepsilon_+ u_-}, \tag{18e}$$

with

$$T_{\pm\mp} = R'_{\mp}\, f_{d\pm\mp} f\phi_{\pm\mp} \tag{18f}$$

$$f_{d\pm\mp} = \left[\left(R_{\mp} + \left(R''_{\pm} \sin\theta_{\pm}/\sin\theta_{\mp}\right)\right)\left(R_{\mp} + M^{\pm 1}\right)^{-1/2} \right] \tag{18g}$$

$$f\phi_{\pm\mp} = \exp\left\{-i\left[k_{\pm} R''_{\pm} - k_{\mp}(R'_{\mp} - R_{\mp})\right]\right\} \tag{18h}$$

and where +− indicates upward propagation while −+ indicates downward propagation, and $R'_{\mp}$ denotes a distance in the source medium relative to the source, while $R''_{\pm}$ similarly denotes a distance in the observation medium relative to the interface.

The preceding results provide the basis for the TCA. Its relative validity is difficult to establish and, in general, can be expected to require numerical computations using the rigorous Sommerfeld theory as a check. There are, however, certain relationships that can be examined analytically. One such check is provided by comparing the foregoing findings with the asymptotic results of Banõs.[7] It was previously shown (Miller and Burke)[8] that the large argument forms of the TCA do agree with Banõs' asymptotic expressions. Another check that can be made is due to the reciprocity that must obtain when source and observation points are interchanged. This requires

$$\int_{L+} \bar{E}^{MT}_{+-} \cdot \bar{I}_+ dw_+ = \int_{L-} \bar{E}^{MT}_{-+} \cdot \bar{I}_- \, dw_- ,$$

which for infinitesimal current moments of unit amplitude becomes

$$\bar{E}^{MT}_{+-} \cdot \hat{w}_+ = \bar{E}^{MT}_{-+} \cdot \hat{w}_- \ . \tag{19a}$$

Upon using Eq. (18) in Eq. (19) we obtain

$$\tilde{T}_{E+-} E^{D}_{E-} w_{+\phi} + \tilde{T}^{V}_{M-+} E^{D,V}_{M-} w_{+z} + \tilde{T}^{H}_{M+-} E^{D,H}_{M-} w_{+\rho}$$

$$= \tilde{T}_{E-+} D^{D}_{E+} w_{-\phi} + \tilde{T}^{V}_{M-+} E^{D,V}_{M+} w_{-z} + \tilde{T}^{H}_{M-+} E^{D,H}_{M+} w_{-\rho} \ , \tag{19b}$$

where

$$\bar{E}^{D}_{\pm} = \frac{i\omega\mu_o}{4\pi} \left[\exp\ (-ik_{\pm}R'_{\pm})/R'_{\pm}\right]\left[\hat{w}_{\pm} - (\hat{w}_{\pm} \cdot \hat{R}'_{\pm})\hat{R}'_{\pm}\right] \tag{20}$$

is the far-field component of $\bar{E}^{D}$, and $\hat{R}'_{\pm}$ is a unit vector in the direction $\bar{R}'_{\pm}$.

Let us consider in turn the three sets of currents specified by

$$\hat{w}_{\pm} = \hat{\phi}$$

$$\hat{w}_{\pm} = \hat{\rho}$$

$$\hat{w}_{\pm} = \hat{z}$$

for which $\bar{E}^{D}_{\pm}$ can be written, respectively,

$$E^{D}_{E\pm} = \frac{i\omega\mu_o}{4\pi R'_{\pm}} \exp\ (-ik_{\pm}R'_{\pm}) \ ,$$

$$E^{D,H}_{M\pm} = \frac{i\omega\mu_o}{4\pi R'_{\pm}} \exp\ (-ik_{\pm}R'_{\pm}) \cos^2 \theta_{\pm},$$

$$E^{D,V}_{M\pm} = \frac{i\omega\mu_o}{4\pi R'_{\pm}} \exp\ (-ik_{\pm}R'_{\pm}) \sin^2 \theta_{\pm},$$

From (19b) we then require

$$\tilde{T}_{E+-} \exp\ (-ik_{-}R'_{-})/R'_{-} = \tilde{T}_{E-+} \exp\ (-ik_{+}R'_{+})/R'_{+} \tag{21a}$$

$$\tilde{T}^V_{M+-} \sin^2\theta_- \exp(-ik_-R'_-)/R'_- = \tilde{T}^V_{M-+} \sin^2\theta_+ \exp(-ik_+R'_+)/R'_+ \tag{21b}$$

$$\tilde{T}^H_{M+-} \cos^2\theta_- \exp(-ik_-R'_-)/R'_- = \tilde{T}^H_{M-+} \cos^2\theta_+ \exp(-ik_+R'_+)/R'_+ \ . \tag{21c}$$

Recall that in Eq. (18f) $R''_\pm$ is measured from the interface to the observation point, while $R'_\pm$ is measured from the source. If $R''_\pm$ and $R'_\mp$ are equated to the actual ray path distances involved, then

$$R''_\pm \to R_\pm$$

$$R'_\pm \to R_- + R_+ \ .$$

With this substitution, we find that Eq. (21) is satisfied, showing that the TCA fields for the lossless case are indeed reciprocal as required. We next consider modifications to the preceding when the lower half space is lossy.

The Lossy Medium

We have thus far dealt with lossless media from the TCA viewpoint. The principal effect of a lossy medium upon the ray-optics type of approach adopted here is the possibility for complex ray paths. Since the transmitted field derivation intimately involves the ray path geometry and the angles of incidence and refraction, it is clear that care must be exercised in applying the approximation to the lossy case (if indeed it can be) in an unambiguous and physically realistic way. Bertoni *et al.*[9] point out an indeterminancy in the ray paths that results from refraction at interfaces of lossy media, i.e., various paths appear to be equally valid for describing the transmitted fields.

Consider first the case of plane-wave incidence from an upper lossless medium, and refraction into a lower medium. The problem is discussed from the classical viewpoint in some detail by Stratton[6] as well as by Bertoni *et al.*[9], the latter by employing a sampling window having a Gaussian profile of transmittance. The angle of incidence θ_+ is then of course real, but θ_- must now be re-defined to be

$$\theta_- = \tan^{-1}\left(\frac{k_+ \sin\theta_+}{\mathrm{Re}(u_-)}\right) \quad , \tag{22}$$

where

$$u_- = \sqrt{k_-^2 - k_+^2 \sin^2 \theta_+} \quad ,$$

and is the direction with respect to the interface normal of a line orthogonal to planes of constant phase in the lower medium. The constant amplitude planes, on the other hand, are parallel to the interface, since the lower medium wave number parallel to the interface is real but complex in the normal direction.

Suppose now that the (+) medium source is close enough to the interface that the wavefront curvature is no longer negligible. If the plane-wave transmission angle [Eq. (22)] is then used in the derivation of the ray-tube divergence factor f_d [which appears in the modified transmission coefficients Eq. (18)], f_d can now be shown to become for downward propagation

$$f_d \rightarrow f'_{d-+} = [(R_+ + R'_- \sin \theta_-/\sin \theta_+)(R_+ + R'_- f/M]^{-1/2} \quad , \tag{23a}$$

where

$$f = \left[1 - \frac{\sin^2 \theta_-}{2} (1 - \cos \gamma)\right] \quad , \tag{23b}$$

$$\cos \gamma = \frac{k_{-r}^2 - k_{-i}^2 - k_+^2 \sin^2\theta_+}{\sqrt{\left(k_{-r}^2 - k_{-i}^2 - k_+^2 \sin^2\theta_+\right)^2 + 4k_{-r}^2 k_{-i}^2}} \quad , \tag{23c}$$

and $k_- = k_{-r} - ik_{-i}$.

For upward propagation the corresponding result for f_d is

$$f_{d+-} = [(R_- + R'_+ \sin \theta_+/\sin \theta_-)(R_- + MR'_+/f)]^{-1/2} \quad ,$$

so that the $f_{d\pm\mp}$ in Eq. (18g) is modified for a lossy medium to

$$f_{d\pm\mp} \rightarrow f'_{d\pm\mp} = [(R_\mp + R'_\pm \sin \theta_\pm/\sin \theta_\mp) \ , \\ (R_\mp + R'_\pm M^{\pm 1} f^{\mp 1})]^{-1/2}. \tag{18g'}$$

We need, in addition, the phase correction factor f_ϕ, which for the lossless medium is defined by Eq. (18h) and with $R''_\pm \to R_\pm$ and $R'_\mp \to R_-$ becomes

$$f_{\phi\pm\mp} = \exp\,[-iR_\pm(k_\pm - k_\mp)]\ . \tag{24}$$

Recall that Eq. (24) is based simply upon deriving an overall phase length, which is the sum of the electrical path lengths in the two media for the assumed ray trajectory and is in agreement with plane-wave theory for the lossless case. Its extension to accommodate a lossy medium might be most directly attempted by allowing k_- to be complex. This would lead to possible attenuation along the interface, however, which differs from the plane-wave result where, for example, attenuation occurs only in a direction perpendicular to the interface for (+) medium incidence.

As an alternative to Eq. (24) for the lossy case we might therefore consider using the analogous plane-wave result, which is given by

$$f'_{\phi\pm\mp} = \exp\left\{i\left[\mp k_+R\pm + k_-(R_- \pm R\pm) - k_+R_-\sin\theta_+\sin\theta_- - R_-\sqrt{\left(k_-^2 - k_+^2\sin^2\theta_+\right)}\cos\theta_-\right]\right\}, \tag{25}$$

where reciprocity is invoked, making the net phase shift along $\bar{R}_+ + \bar{R}_-$ the same in either direction when Eq. (25) is multiplied by the source-medium field at a distance $R_+ + R_-$. Note that only the lower medium is allowed to be lossy. When k_- is real, Eq. (25) reduces to Eq. (24) as required. Equation (25) is therefore the phase correction term we employ in the TCA, although from a numerical viewpoint, evaluation of Eq. (24) with a complex k_- is only slightly different from Eq. (25) since for most ground problems of interest, $|k_-|^2 >> k_+^2$ with the result that

$$f'_{\phi\pm\mp} \approx \exp\,[-iR_\pm(k_\pm - k_\mp)].$$

If we now ask whether the fields for the lossy case satisfy reciprocity, we find that the $f^{\mp 1}$ factor in Eq. (18g') prevents it. But without satisfying reciprocity, the utility of the TCA must be questioned. To ensure that the fields are reciprocal, we can draw from a similar situation in connection with approximating the surface wave fields that propagate across a coast line

(Millington).[10] The approach was to guarantee reciprocity by expressing the field propagation in either direction in terms of the geometric mean of the separate direction which produced theoretical results in good agreement with mean of the individual experiment. We employ this approach here. It does not ensure that correct results will be obtained using the TCA, but at least it will provide the reciprocal description of the transmitted fields required of a physically realistic representation. The divergence factor for the lossy case is then defined as

$$f_d = [f'_{d+-} f'_{d-+}]^{1/2} \tag{26}$$

for both upward and downward propagation.

SPECIAL PROBLEM AREAS

The preceding discussion has focused primarily on the fields produced by a filamentary current source located near an interface. As such, it was concerned, implicitly at least, with the boundary conditions such fields must satisfy both at the interface, which is reflected in the resulting Green's function, and on the antenna, which gives rise to the integral equation that represents a formal solution to the problem. Before the formulation is complete, however, consideration must also be given to what conditions peculiar to the half-space problem must be satisfied by the antenna conduction current. For wire antennas in free space, for example, we commonly assume that the current will vanish at all open ends. However, the interface and the possibility for a lossy medium generate circumstances where the current behavior may not be so simply described. Several of these are considered.

Open-Ended Wire in a Lossy Medium

The conduction current at the open end of a wire located in free space is zero because the physical charge flow is confined to the antenna surface. Although some allowance may be made for the fact than an antenna has a nonzero diameter end cap onto which charge can flow, so that the current may not be precisely zero at the physical end of the antenna's longitudinal surface, this effect is small for a thin wire and can usually be neglected. When the medium surrounding the antenna is itself conductive, however, charge exchange between

the medium and the antenna surface can occur. That which takes place along the length of the antenna needs no explicit consideration in any current boundary condition, but is implicitly included in the in-phase normal fields at the antenna surface. On the other hand, a boundary condition on the current at the antenna end is now required to provide for the charge exchange that can occur and which thus results in a nonzero current. The need for a boundary condition arises partially because we use a three-term current basis and reduce the number of unknowns to one per segment by using intersegment, junction, and end conditions. However, a pulse-type current basis would not explicitly require this.

The end condition imposed on the current might be expressed in terms of either the current or its derivative, or more generally as a relationship between them. Consider a solid wire of radius (a) along which the total surface current is $\bar{I}(w) = I(w)\,\hat{w}$. The surface charge density σ_{surf} is then

$$\sigma_{surf}(w) = -\frac{\nabla \cdot \bar{I}(w)}{i\omega 2\pi a} .$$

Let $\nabla \cdot \bar{I}(w)/_{end}$ be $\nabla \cdot \bar{I}(w)$ evaluated at the wire end, and let us further assume that

$$\sigma_{surf}(w)/_{end} \approx \sigma_{end},$$

where σ_{end} is the charge density on the flat end cap. If the flow of current between the end cap and the medium is characterized by

$$\bar{J}_{end} = \sigma_{medium}\,\bar{E}_{norm} ,$$

where

$$\bar{E}_{norm} \approx \hat{w}\,\frac{\sigma_{end}}{\varepsilon_{medium}} ,$$

we obtain

$$\bar{I}(w)/_{end} \approx \pi a^2 \bar{J}_{end}$$

$$\approx -\hat{w}\,\frac{a\sigma_{medium}\,\nabla \cdot \bar{I}(w)/_{end}}{2i\omega\varepsilon_{medium}} . \qquad (27)$$

Equation (27) is the condition we therefore employ as our generalized end condition for the current on an open-ended wire in an arbitrary, homogeneous medium. Note that Eq. (27) becomes zero when the medium conductivity vanishes, as required.

Wire Terminated at the Interface

In this case, we must consider not only the possible effect of a lossy ground on the end current, but also the influence of grounding structures, such as counterpoises, to which the antenna may be connected. For the former problem we might consider following the approach taken for the homogeneous medium, since it is based only on the parameters of the medium in contact with the antenna's end. The behavior that would be predicted for the end current seems plausible, since it is zero for the lossless medium, while in the limit of perfect conductivity, Eq. (27) shows that

$$\lim_{\sigma_{medium} \to \infty} \nabla \cdot \bar{I}(w)/_{end} \to 0$$

This result is compatible with what is known about the current on an antenna or scatterer connected to a perfectly conducting ground plane, for which image theory shows the current to be an even function about the image plane.

The latter problem of the counterpoise is similar to that of the penetrating conductor to be discussed. The primary difference between the treatments we employ is that we use an approximate approach for the counterpoise by establishing a current end condition at the interface for the wire in the upper medium, while ignoring current flow on the counterpoise and possible radiation from it for the lower medium. This procedure works well for a Beverage antenna where the counterpoise may be simply a metal stake implanted in the ground against which the antenna is driven. In this instance, we have assumed that $\nabla \cdot \bar{I}(w)/_{end}$ is zero at the ground plane, and find good agreement between calculation and measurement for moderately conducting grounds ($\sigma \sim 10^{-3}$ mhos/m) at 10 MHz). This method can admittedly be highly approximate; it has been used for expediency but with generally good results. It appears to be applicable where the counterpoise is large enough to provide a suitable grounding point against which an antenna can be driven, yet is also small enough to contribute negligibly to the radiation field. In addition, results

computed for monopole antennas using this approach are actually quite insensitive to the current end condition employed, and differ little from the $\nabla \cdot \bar{I}(w)/_{end} = 0$ result for a wide range of ground parameters (Burke and Selden).[11]

Wire Penetrating the Interface

This is essentially the counterpoise problem, with the added complexity that we now attempt to more accurately relate the current behavior at the interface to the ground parameters, and also explicitly include the fields of the currents that flow on the buried elements of the antenna. The approach employed is to establish a relationship between the current and charge on the wire at the interface in a fashion analogous to Eq. (27). A rigorous solution to this problem might be based upon the behavior of the current on an infinite cylindrical antenna that penetrates the interface at an arbitrary angle. But an infinite antenna acts as a single-wire transmission line that supports a TEM field, thus suggesting that the behavior of the cylinder fields at the interface may be similar to that of a plane wave at the same angle of incidence. In particular then, we might be able to derive a relationship between the current and charge at the interface from the plane-wave solution.

Consider a plane wave normally incident from the free-space (+) side of the interface for which the incident, reflected, and transmitted magnetic fields are

$$H^{INC} = H_+^{INC} e^{+ik_+ z}/\eta_+$$

$$H^{R} = H_+^{INC} R e^{-ik_+ z}/\eta_+$$

$$H^{T} = H_+^{INC} T e^{+ik_- z}/\eta_- ,$$

where

$$R = \frac{\eta_+ - \eta_-}{\eta_+ + \eta_-} , \quad T = 2\,\frac{\eta_-}{\eta_+ + \eta_-}$$

with

$$\eta_\pm = \sqrt{\mu_o/\varepsilon_\pm} ,$$

and of course $J^{INC} + H^R = H^T$ at $z = 0$.

The derivative with respect to z of the total (+) and (-) medium magnetic fields can also be written

$$\frac{\partial}{\partial z}(H^{INC} + H^R)\Big|_{z=0^+} = H'(z = 0^+) = H_+^{INC} ik_+(1 - R)/\eta_+$$

$$= H_+^{INC}(ik_+/\eta_+)\frac{2\eta_-}{\eta_+ + \eta_-} = H'_{++}$$

$$\frac{\partial}{\partial z} H^T\Big|_{z=0^-} = H'(z = 0^-) = H_+^{INC} ik_- T/\eta_- = H_+^{INC}(ik_-/\eta_-)$$

$$\times \frac{2\eta_-}{\eta_+ + \eta_-} = H'_{-+} .$$

Observe that the magnetic field is continuous across the interface, but its derivative is not.

Since the current on a wire can be expected in the general case to have components traveling in opposite directions, we must also consider a wave incident from the (-) medium. Following the preceding we find

$$H'_{+-} = H'(z = 0^+) = -H_-^{INC}(ik_+/\eta_+)\frac{2\eta_+}{\eta_+ + \eta_-}$$

$$H'_{--} = H'(z = 0^-) = -H_-^{INC}(ik_-/\eta_-)\frac{2\eta_+}{\eta_+ + \eta_-} .$$

The foregoing results establish the rations of the magnetic-field derivatives on the two sides of the interface as

$$\frac{H'_{+-}}{H'_{--}} = \frac{H'_{++}}{H'_{-+}} = \frac{\varepsilon_+}{\varepsilon_-} .$$

From this development we infer that an appropriate approximation for the current behavior of $z = 0$ is

$$I_+ = I_-; \text{ i.e., current continuity} \tag{28a}$$

$$I_+' = [(\varepsilon_+/\varepsilon_-)I_-'; \text{ i.e., charge discontinuity.} \tag{28b}$$

This result can also be derived by employing the continuity of the tangential electric field at the interface and the relationship at the wire surface that $E_{normal} = Q/\varepsilon = -i\omega I'/\varepsilon$, where Q is the linear charge density. Also, the preceding charge condition is an obvious approximation, since its use leads to a nonzero electric field tangent to the wire at the interface.

If, on the other hand, we used the condition of charge and current continuity at the z = 0 interface, fields tangential to the interface would be discontinuous. A self-consistent solution could only be obtained by using the rigorous Sommerfeld theory, or its equivalent, to account for the field behavior along the interface in terms of a spectrum of radial waves and a similar expansion of z-direction waves along the wire. The charge condition suggested here is an attempt to include interface effects upon the charge distribution in a manner consistent with the RCA and TCA.

Equation (28) is thus the current condition we employ for a wire that penetrates the interface at a right angle. The same approach might be considered for a wire that intersects the interface at an oblique angle, or is bent at the interface.

GENERALIZATION

In the preceding discussion, for conceptual simplicity we have limited our consideration to only two antennas, so that $C(\bar{r}) = C_1(\bar{r}) + C_2(\bar{r})$ is the total wire contour. A formal extension of the general procedure to more than two antennas is readily achieved. Let us number the antennas in the (+) medium from $i = 1, \ldots, W_+$, and those in the (-) medium from $i = W_+ + 1, \ldots, W_+ + W_-$, where a wire that penetrates the interface is by convention considered as two separate antennas. Then Eq. (4b) is more generally

$$\bar{E}^M(\bar{r}_i) = U_i \sum_{j=1}^{W_+} \bar{E}_{ij}^{MD} + (1 - U_i) \sum_{j=W_++1}^{W_++W_-} \bar{E}_{ij}^{MD}$$

$$+ (1 - U_i) \sum_{j=1}^{W_+} \bar{E}_{ij}^{MT} + U_i \sum_{j=W_++1}^{W_++W_-} \bar{E}_{ij}^{MT}$$

$$i = 1, \ldots, W_+ + W_-; \; i \neq j \qquad (4b)$$

where

$$U_i = 1; \; 1 \leq i \leq W_+$$

$$0; \; W_+ < i \leq W_+ + W_-,$$

and Eq. (4a) is the same. It is thus possible to treat a collection of wire antennas arbitrarily positioned relative to the interface or, by the use of wire-grid modeling, to evaluate the interaction of surface-like structures with the interface and other structures as well.

Numerical Treatment

The general details of the numerical procedure have already been summarized in the preceding sections of this report. We limit our comments here to those aspects of the treatment associated with the special requirements of the TCA. They involve essentially two types of calculations: determination of the ray path, and subsequent evaluation of the transmitted field. Each is considered in turn.

RAY PATH DETERMINATION

The TCA requires that the ray which joins two points located on opposite sides of the interface be found so that the angle of incidence needed for computing the transmission coefficients and the apparent observation point

location relative to the source segment can be evaluated. Now consider upper and lower media locations given by $\bar{r}_+$ and $\bar{r}_-$, respectively, and the vertical plane that contains them (the incidence plane), as shown in Fig. 1(a). Since we assume ray path reciprocity, then the source position vector $\bar{r}'$ could be either $\bar{r}_+$ or $\bar{r}_-$.

Then let

$$\rho = [(x_+ - x_-)^2 + (y_+ - y_-)^2]^{1/2},$$

which also equals

$$\rho = z_- \tan\theta_- + z_+ \tan\theta_+ .$$

But from Eq. (22) for θ_- we obtain

$$\rho = z_- \frac{k_+ \sin\theta_+}{\mathrm{Re}(u_-)} + z_+ \frac{\sin\theta_+}{\cos\theta_+}$$

$$= \sin\theta_+ \left\{ \frac{z_-}{\mathrm{Re}\sqrt{\varepsilon_-/\varepsilon_+ - \sin^2\theta_+}} + \frac{z_+}{\sqrt{1 - \sin^2\theta_+}} \right\} . \tag{29}$$

Equation (29) provides a transcendental relationship between the unknown angle θ_+, the medium parameters, and the coordinates $\bar{r}_+$ and $\bar{r}_-$ of the points through which the ray must pass. It can be readily solved for θ_+ using an iteration procedure, following which θ_- is obtained from Eq. (22).

TRANSMITTED FIELD EVALUATION

Proceeding as outlined in the section on lossy ground — RCA and TCA approach, we compute the field $\bar{E}'(\bar{r}_a)$ at the apparent observation point $\bar{r}_a$ in an infinite medium having the source parameters where,

$$\bar{r}_a = \bar{r}' + \hat{s}_\pm\left(M^{\pm 1} f^{\mp 1} R_\pm + R_\mp\right), \tag{30a}$$

$$\hat{s}_\pm = \mp\hat{z}\cos\theta_\pm \pm \sin\theta_\pm(\hat{x}\cos\phi + y\sin\phi), \tag{30b}$$

$$\phi = \tan^{-1}\frac{y_+ - y_-}{x_+ - x_-} ,$$

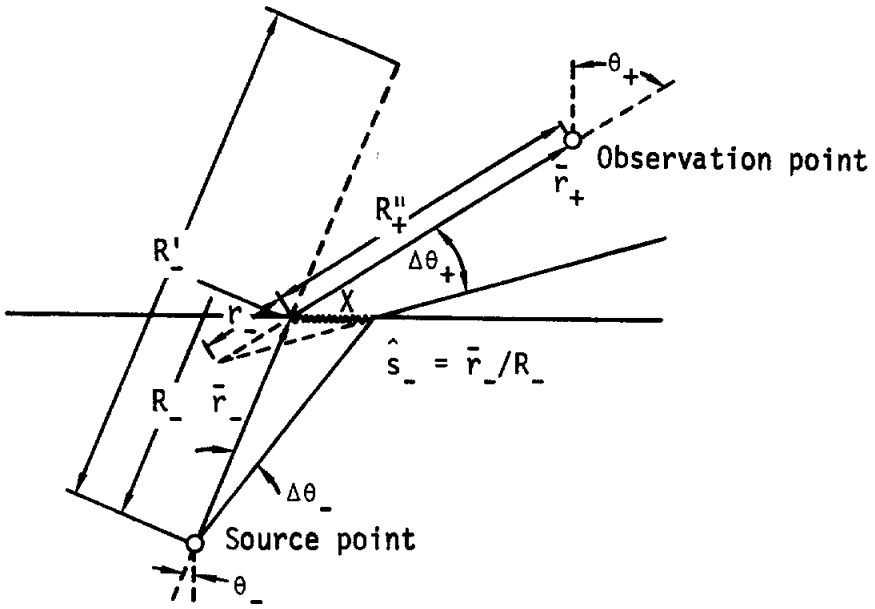

(a)

Fig. 1. (a) Ray-path geometry for points located at opposite sides of the interface. The source is located in the lower media, the observation point in the upper medium. (b) Ray-path geometry for a source in the upper medium and an observation point in the lower medium.

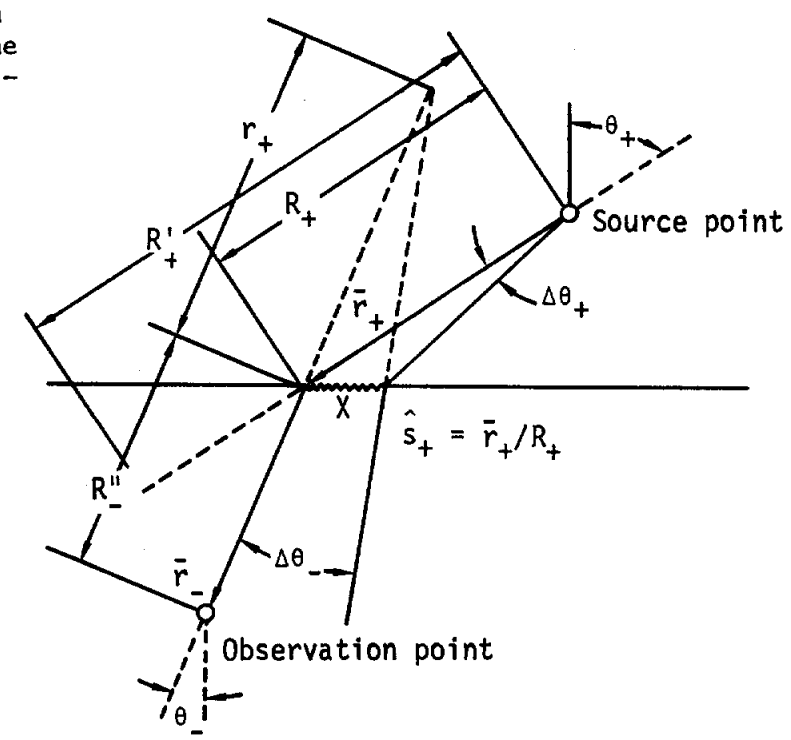

(b)

$\bar{r}'$ denotes the source location, and the upper sign in Eq. (30) applies to a (+) medium source and the lower to a (-) medium source.

The factor M in $\bar{r}_a$ accounts for the apparent displacement of the source point with respect to the observation point. Note that

$$|\bar{r}_a - \bar{r}'| < R_+ + R_-$$

for a source medium optically denser than the observation medium, and conversely. This means that a source in the denser medium appears closer to the observer, which is consistent with our experience in viewing objects in a water half space.

The field $\bar{E}'(\bar{r}_a)$ in the source medium is next decomposed into its TE and TM components relative to the incidence plane as

$$\bar{E}'_E(\bar{r}_a) = \hat{s}_\perp[\hat{s}_\perp \cdot \bar{E}'(\bar{r}_a)]$$

$$\bar{E}'^V_M(\bar{r}_a) = \hat{z}(\hat{z} \cdot \bar{E}'(\bar{r}_a))$$

$$\bar{E}'^H_M(\bar{r}_a) = \hat{s}_+(\hat{s}_+ \cdot \bar{E}'(\bar{r}_a)) \ ,$$

where

$$\hat{s}_\parallel = \hat{x} \cos\theta + \hat{y} \sin\theta$$
$$\hat{s}_\perp = -\hat{x} \sin\theta + \hat{y} \cos\theta,$$

and

$$\bar{E}'(\bar{r}_a) = \bar{E}'_\mp(R'_\mp) \ .$$

The observation medium field is now simply obtained as

$$\bar{E}^{MT}(\bar{r}) = T_{EE}\bar{E}'(\bar{r}_a) + T^H_M\bar{E}'^H_M(\bar{r}_a) + T^V_M\bar{E}'^V_M(\bar{r}_a) \ ,$$

from which the component tangent to the observation segment is given by

$$E^{MT}(\bar{r})\Big|_{TAN} = \hat{w} \cdot \bar{E}^{MT}(\bar{r}) \ .$$

The rotation of the electric field in the incidence plane, which results from the change in direction of the ray upon refraction, is implicitly accounted for by the T_M transmission coefficients. Thus, the field computed at $\bar{r}$ has, within the limitations of the TCA, the proper polarization and propagation direction relative to the observation segment.

Numerical Results

The treatment described for approximating the interaction of wire objects on opposite sides of the planar interface requires little more computing time than for modeling the same objects in free space. Applying the rigorous Sommerfeld theory is much more costly, so it is impractical to perform the extensive comparisons we would prefer to establish the utility of the TCA. The limited results presented here thus serve more to demonstrate the physical plausibility of the approach than to thoroughly validate it. As further rigorous computations and/or measurements become available, the TCA can be more completely tested.

An example of using an antenna above ground to detect the presence of a buried wire is provided by the results of Fig. 2(a). Here we plot the change in the input impedance of the elevated dipole antenna as it is moved over the ground at a constant height in terms of its distance from the buried wire. Both the wires are parallel to the ground and to each other, and are located with their centers in the same vertical plane. Significant impedance changes (~10%) are observed and, as expected, the effect of increasing the ground conductivity is to reduce the influence of the buried wire. For comparison, we show in Fig. 2(b) the percentage change in input impedance for both the TCA approach and the rigorous Sommerfeld theory.

When the centers of the wires lie on a common vertical line and one is rotated in a horizontal plane with respect to the other, the impedance varies as shown in Fig. 3. The impedance excursion is maximum when the wires are aligned, and zero when they are orthogonal. In the latter case they are uncoupled due to symmetry.

The possibility that such an alignment might cause a buried object to go undetected suggests the use of a two-element, orthogonal array as illustrated

Fig. 2. (a) The change in input impedance of an elevated dipole can be used to detect the presence of a buried wire. Shown here is the change in input impedance of a dipole as it passes over a buried dipole, λ/4 m deep. (b) Effect of buried wire on input impedance.

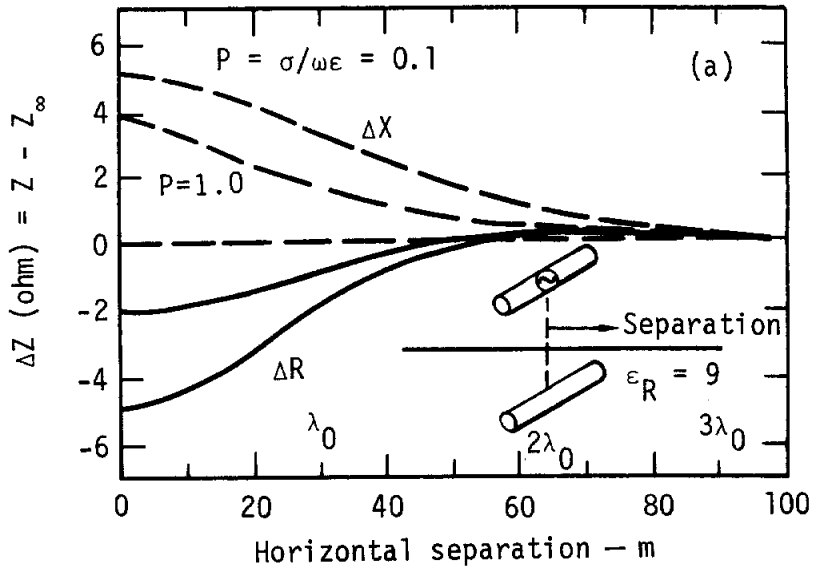

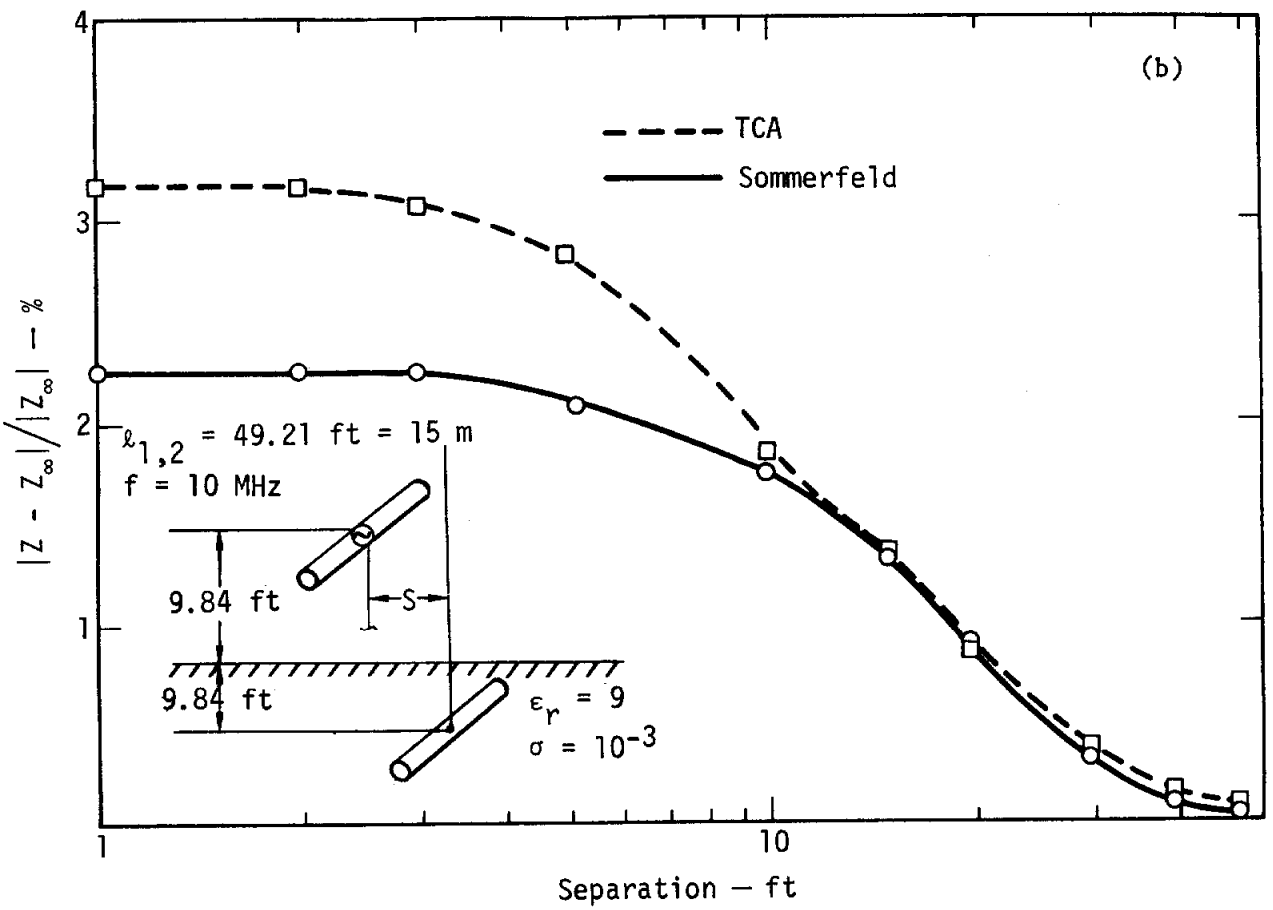

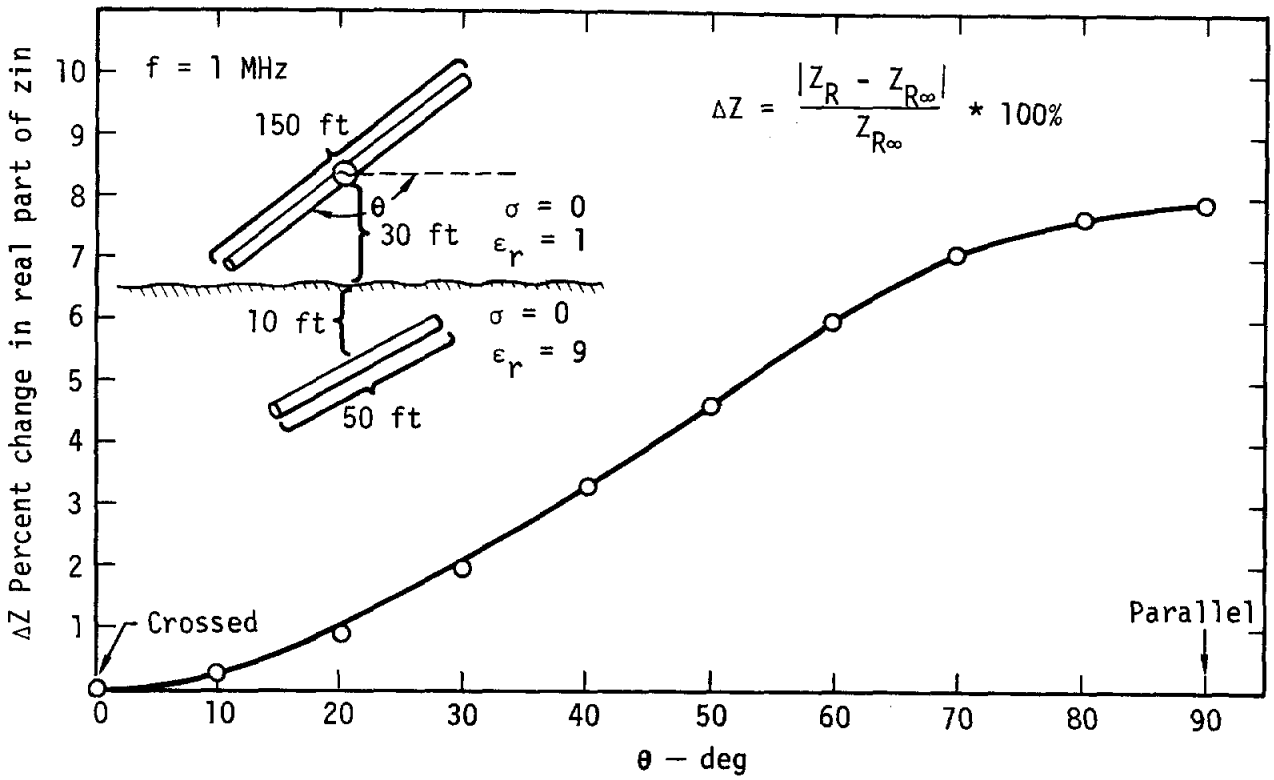

Fig. 3. Percentage change in input impedance as upper antenna is rotated in the horizontal plane.

in Fig. 4. By exciting the two antennas with voltages of equal amplitude and adjustable phase, the effect of a rotating dipole antenna can be simulated. Upon recording the maximum impedance change occurring as this antenna is moved over the interface to cover an area beneath which a wire is buried at an angle canted with respect to the array elements, we obtain Fig. 4 results. The influence of the buried wire is clearly evident, although the maximum impedance excursions are not clearly aligned along the direction of the wire.

For our concluding example, we present in Fig. 5 the above-ground radiation pattern for a buried dipole antenna as it is rotated in the vertical plane about an axis parallel to the interface. Observe the directivity change of the radiation pattern as the antenna is tilted from the horizontal, and the re-establishment of a symmetric pattern as it becomes vertical.

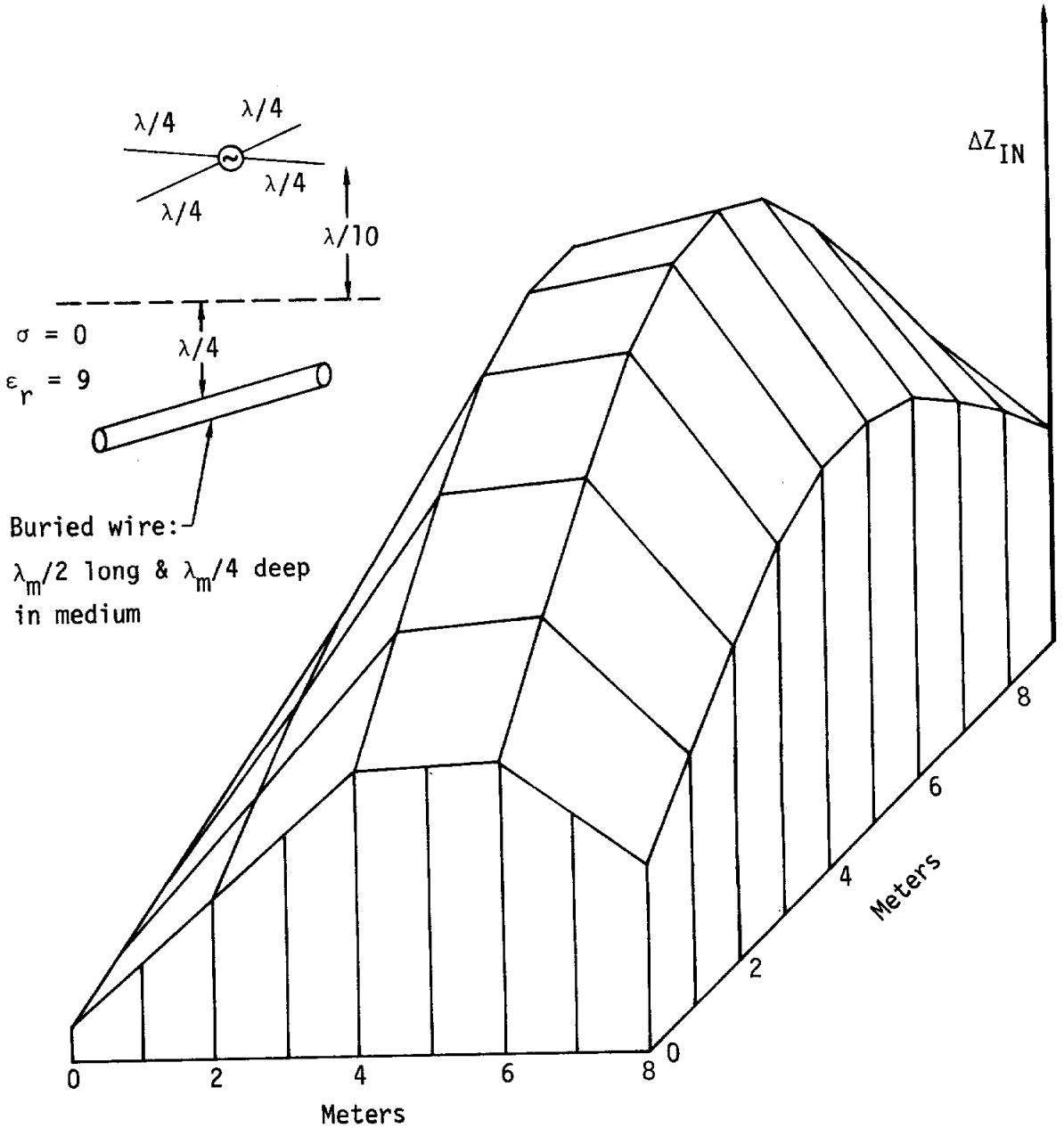

Fig. 4. Change in input impedance observed as a crossed dipole pair passes over a buried wire.

Conclusion

This report presents an integral-equation technique that permits the approximate treatment of objects that interact electromagnetically across the interface. Included in the integral-equation formulation is a development denoted as the transmission coefficient approximation (TCA). This is a logical

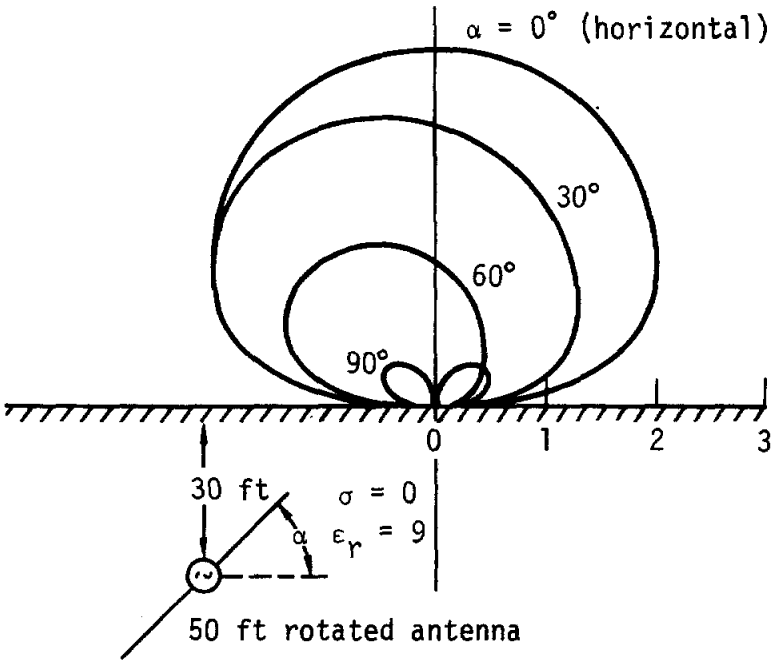

Fig. 5. Above-ground radiation patterns for a buried antenna as it rotates in a vertical plane.

extension of an earlier procedure for approximating the interaction of an object with an interface, called the reflection coefficient approximation (RCA). The TCA involves a ray-optics approach to obtain the fields transmitted across the interface, and assumes reciprocity of phase and amplitude along the path joining two points on opposite sides of the interface. By including the RCA and TCA in field contributions in the integral-equation for a wire, we can obtain the current distributions on antennas or scatterers that interact with, or across the interface. Thus, it is possible to analyze buried antennas, elevated antennas as affected by buried objects, etc.

Results obtained by using the TCA are physically plausible. Limited comparison with results derived from the rigorous Sommerfeld theory has further demonstrated its numerical validity. The TCA can thus provide an approximate method applicable to a wide variety of interface problems, including subsurface probing, performance analysis of buried antennas, etc., at little increase in computation time over a free-space medium, and with engineering accuracy.

References

1. E. K. Miller, A. J. Poggio, G. J. Burke, and E. S. Selden, *Can. J. Phys.* 50, pp. 879-888 (1972).
2. E. K. Miller, A. J. Poggio, G. J. Burke, and E. S. Selden, *Can. J. Phys.* 50, 2614-2627 (1972).
3. R. J. Lytle and D. L. Lager, *Numerical Evaluation of Sommerfeld Integrals*, Lawrence Livermore Laboratory, Rept. UCRL-51688 (1974).
4. A. J. Poggio and E. K. Miller, "Integral Equation Solutions of Three-Dimensional Scattering Problems," in *Computer Techniques for Electromagnetics*, R. Mithra, Ed. (Permagon Press, New York, N.Y., Ch. IV, 1973).
5. E. K. Miller and F. J. Deadrick, "Some Computational Aspects of Thin-wire Modeling," in *Numerical and Asymptotic Techniques in Electromagnetics*, R. Mithra, Ed., Ch. IV (Springer-Verlag, New York, N.Y., 1975).
6. J. A. Stratton, *Electromagnetic Theory* (McGraw-Hill, New York, N.Y., 1941).
7. A. Baños, *Dipole Radiation in the Presence of a Conducting Half Space* (Pergamon Press, New York, N.Y., 1966).
8. E. K. Miller and G. J. Burke, *Radiation from Buried Antennas*, Lawrence Livermore Laboratory, Rept. UCID-15890 (1971).
9. H. L. Bertoni, L. B. Felsen, and A. Hessel, *IEEE Trans. Antennas Propag.* 19, (3), pp. 226-237; correction 19 (9) p. 718.
10. G. Millington, "Ground-Wave Propagation Over an Inhomogeneous Smooth Earth," in *Proc. IEE* vol. 97, No. 48 (1950), Part III, p. 53.
11. G. J. Burke and E. S. Selden, Lawrence Livermore Laboratory, private communication (1974).

RMD/sc/vt/mla