UCRL-52411

A USER'S GUIDE TO DESIGNING AND MOUNTING LENSES AND MIRRORS

Bryan J. Kowalskie

CIRCULATION COPY
SUBJECT TO RECALL
IN TWO WEEKS

February 17, 1978

Work performed under the auspices of the U.S. Department of Energy by the UCLLL under contract number W-7405-ENG-48.

LAWRENCE
LIVERMORE
LABORATORY
University of California/Livermore

DISCLAIMER

This document was prepared as an account of work sponsored by an agency of the United States Government. Neither the United States Government nor the University of California nor any of their employees, makes any warranty, express or implied, or assumes any legal liability or responsibility for the accuracy, completeness, or usefulness of any information, apparatus, product, or process disclosed, or represents that its use would not infringe privately owned rights. Reference herein to any specific commercial product, process, or service by trade name, trademark, manufacturer, or otherwise, does not necessarily constitute or imply its endorsement, recommendation, or favoring by the United States Government or the University of California. The views and opinions of authors expressed herein do not necessarily state or reflect those of the United States Government or the University of California, and shall not be used for advertising or product endorsement purposes.

This report has been reproduced
directly from the best available copy.

Available to DOE and DOE contractors from the
Office of Scientific and Technical Information
P.O. Box 62, Oak Ridge, TN 37831
Prices available from (615) 576-8401, FTS 626-8401

Available to the public from the
National Technical Information Service
U.S. Department of Commerce
5285 Port Royal Rd.,
Springfield, VA 22161

Work performed under the auspices of the U.S. Department of Energy by Lawrence Livermore National Laboratory under Contract W-7405-ENG-48.

Distribution Category
UC-38

LAWRENCE LIVERMORE LABORATORY
University of California/Livermore, California/94550

UCRL-52411

A USER'S GUIDE TO DESIGNING AND MOUNTING LENSES AND MIRRORS

Bryan J. Kowalskie

MS. date: February 17, 1978

CONTENTS

Abstract 1
Optical Glass 1
Philosophy 1
Stress and Strain Relationships 1
Source of Equations 1
First-Order Effects of Reflective vs Refractive Optics 1
Optical Glass 1
Sources of Information 1
General Properties of Glass 2
Stress Limits for Glass 2
Glass Configurations and Tolerances 2
Configurations 2
Thickness 2
Clear Aperture 2
Diameters and Flats 2
Edge Coatings 4
Sign Conventions 4
Doublets and Triplets 4
Chamfers 4
Sag of Lenses and Mirrors 7
Sag Calculation 7
Computer Lens Design 7
Contact Diameter 8
Contact Angle 8
Lens Cell Design 9
Introduction 9
Environmental Considerations 9
Temperature 10
Vibration 10
Pressure 10
Design of Components 11
Lens Cells 11
Retaining Rings 11
Retaining Ring Torque 11
Materials 13
Baffles and Aperture Stops 13
Spacers 13
Mirrors and Mirror Mounts 14
Surface vs Wavefront Error 14
Wavelength vs Physical Dimensions 14
Path Error and Astigmatism 15
Interferometry 15
Interferometers 15
Interferograms 15
Mirror Mounts 15
Edge Supports 15
Three-Point Support 17
Continuous Edge Supports 18
Large Mirror Supports 18
Design Sequence—Round Mirrors 19
Design Sequence—Rectangular Mirrors 19
Computer Techniques 20
Large Mirror Mounts 20
Sling Mounts 20

Other Vertical Mounts 20
Back Support for Large Mirrors 22
Mount/Mirror Integration 22
Three-Point Support 23
Eighteen-Point Support 23
Bonded Support 23
RTV Pads 25
Mechanical Linkages 25
Hydraulic Mounts 25
Kinematic Mounts 26
Informal Glossary 26
References and Notes 30
Appendix - Fundamentals of Interferometry 31

ABSTRACT

This guidebook is a practitioner-oriented supplement to standard texts in optics and mechanical engineering. It reflects the author's practical experience with the oftentimes troublesome aspects of effectively integrating optical components with mechanical hardware. Accordingly, its focus is on the techniques, assumptions, and levels of design sophistication needed for a wide variety of sizes and optical surface quality levels. It is intended to be a primer for engineers, designers, and draftsmen already familiar with some of the problems encountered in mounting optical components and who are responsible for developing components for high-energy laser systems.

OPTICAL GLASS

General Philosophy of Mounting

Stress and Strain Relationships

Two fundamental requirements must be met to maintain the integrity of an optical component in a system:

- The glass itself must be held in such a way that forces acting on it do not tend to bend the element.
- An optical element must be rigidly held in position and prevented from shifting its center or tipping with respect to the optical axis. Stability is often far more important than initial position. As long as an element remains where it is put, problems are avoided.

Source of Equations

The engineer should keep stiffness—not stress—foremost in mind when analyzing the suitability of a design. (The text by Roark[1] is most useful in this regard.) Stress may not be ignored, however, and designs must be checked with regard to stress, but stiffness takes precedence.

First-Order Effects on Reflective vs Refractive Optics

Mirrors are significantly more sensitive to distortion than lenses (including windows). The deformation of a lens causes two optical surfaces to bend: as the front goes into tension, the rear compresses, and the errors tend to subtract. Consequently, first order aberrations, such as power and astigmatism almost cancel. By the same token, a $\lambda/10$ wave distortion to a window results in an optical path difference that may be undetectable. On the other hand, a mirror has a single optical surface that doubles errors as light is reflected. An induced surface error of $\lambda/10$ produces a wavefront deteriorated by $\lambda/5$. Accordingly, designing mirrors and their mounts requires considerable care.

Optical Glass

Sources of Information

The best information sources for the properties of specific types of glass are manufacturers' literature.

The *Schott Catalogue** is perhaps the best, most thorough compilation of engineering data for specific types of glass.[2] The catalogue lists five items by glass type:

- Density;
- Coefficient of linear thermal expansion;
- Young's modulus;

*Reference to a company or product name does not imply approval or recommendation of the product by the University of California or the U.S. Energy Research & Development Administration to the exclusion of others that may be suitable.

- Modulus of rigidity; and
- Poisson's ratio.

The catalogue also contains miscellaneous data that are less frequently needed by mechanical engineers.

General Properties of Glass

A good rule of thumb for approximating some of the mechanical properties of the more common glass types is to substitute the properties of aluminum in computations. This often simplifies first-order calculations for both glass and mount (if aluminum).

Comparison of a common glass, BK-7, with Al Alloy 6061-T6 illustrates the closeness of fit (Table 1).

Table 1. Comparison of glass and aluminum alloy properties.

	BK-7 Glass	Aluminum (AA6061-T6)
Density, ρ	2507.8 kg/m^3 (0.0906/lb/in.^{3})	2513.33 kg/m^3 (0.0908 lb/in.^{3})
Thermal expansion, α	71×10^{-7}m/m/°C (16×10^{-6} in./in./°F)	57.7×10^{-7}m/m/°C (13×10^{-6} in./in./°F)
Young's Mod., E	7.997×10^{10} Pa (11.6×10^{6} lb/in.^{2})	7.308×10^{10} Pa (10.6×10^{6} lb/in.^{2})
Poisson's Ratio, ν	0.208	0.33

Stress Limit for Glass

Glass behaves well in compression, but very poorly in tension and bending.

A safe rule of thumb is to limit the stress level for a tensile or bending load into glass to a maximum of 6.89×10^6 Pa (1000 psi). The actual ultimate stress level of most glass can range from 1.379×10^7 to 1.72×10^8 Pa (2000 to 25000 psi), but glass rarely needs to be stressed beyond 1000 psi. Compression loads (not point loads) can be significantly higher.

Glass Configurations and Tolerances

Configurations. *Use round glass whenever possible.* Round elements are preferable for a number of reasons:

- The round shape is easier to analyze.
- The round shape can be generated easily and held to close tolerances (only one setup is required).
- There is minimum tool rolloff from the edge during polishing; the result is a better quality surface and faster fabrication.
- The round element may be rotated to find the optimum performance position.
- Round glass, when strained, becomes spherical, causing a focus shift that is usually easy to correct. A symmetrical aberration can become astigmatic if the round mirror is mounted at an angle. Glass with an irregular shape is more likely to produce nonsymmetrical aberrations.

Thicknesses. The *aspect ratio* is the relationship between diameter and thickness (i.e., 5:1 indicates a diameter 5 times the thickness).

The higher the aspect ratio, the stiffer the glass and the more capable it is of holding figure. However, since density also increases, the gravity vector may cause the glass to sag out of figure under its own weight. Additionally, heavy pieces of glass are highly susceptible to chipping and edges must be chamfered.

Low-aspect-ratio glass is thin and harder to polish since its support must add to its stiffness under polishing stresses. Thin pieces are easily distorted by the mounts; therefore, they require more precise mounting techniques (this is especially true for mirrors).

Clear Aperture. Glass elements must be sized somewhat larger than the required clear aperture to allow for some tool rolloff, a support for coating operations, and a surface to mount or restrain the elements (see Fig. 1).

A rule of thumb is to provide at least 1 cm clearance on a side between the clear aperture and the outside diameter. Care must be taken to ensure that lenses do not become excessively thin beyond the clear aperture. If a problem appears, the optical engineer can usually redesign the element's shape to correct for the problem (see Fig. 2).

Diameters and Flats. *Always place a flat on a concave-shaped lens* (see Fig. 3). The flat provides a mounting surface and avoids the danger of chipping the sharp edge. The outside diameter of a mirror or lens is usually generated by holding the element to a machine table with a vacuum chuck and grinding the edge.

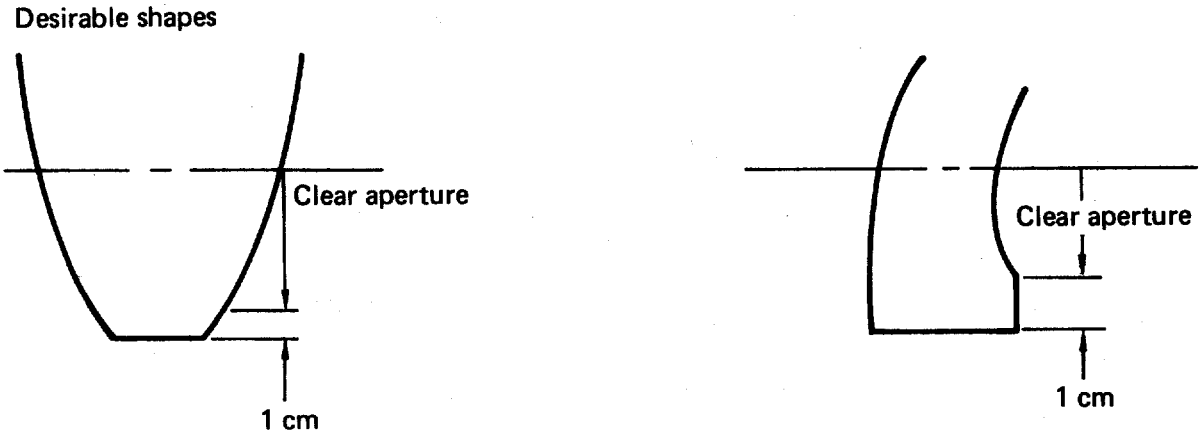

Fig. 1. Clear aperture.

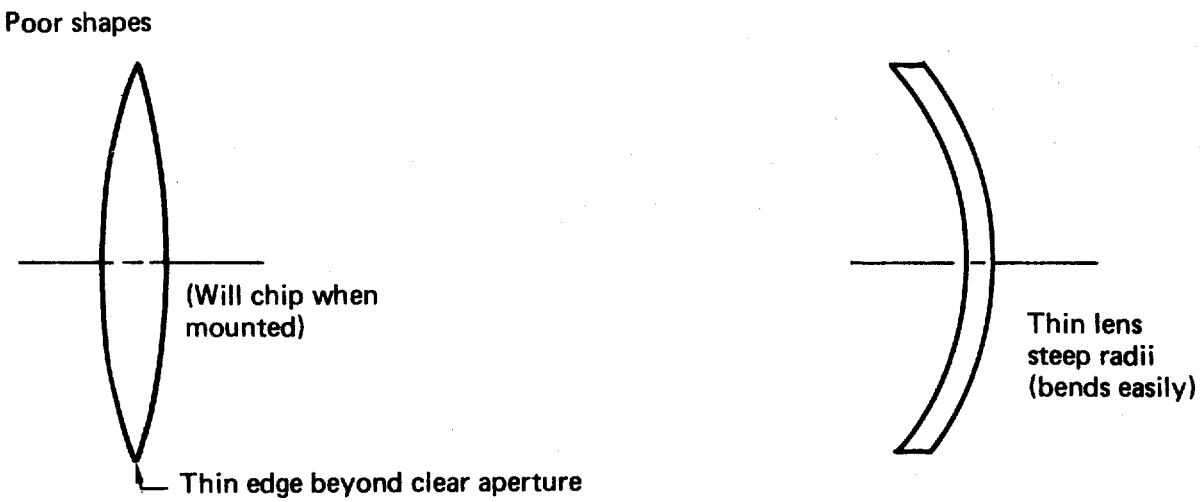

Fig. 2. Thin lenses.

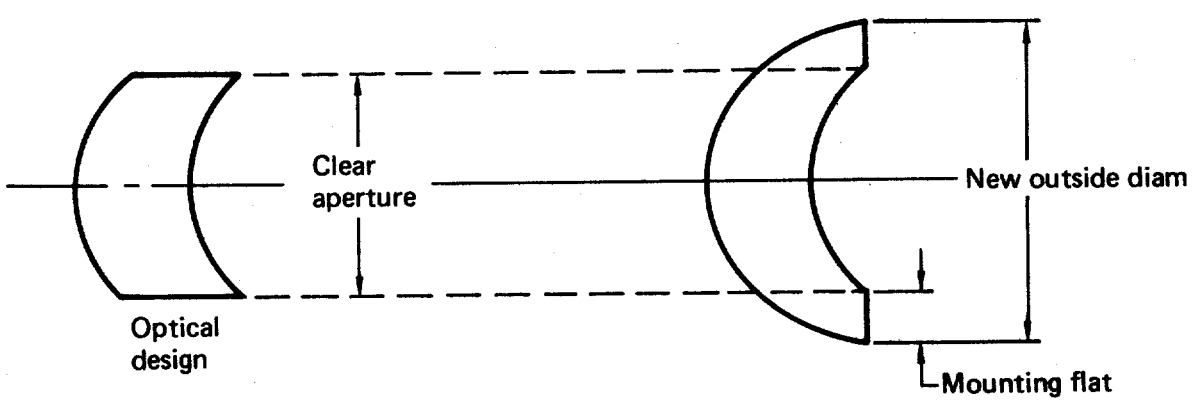

Fig. 3. Location of flats on concave lenses.

Since good tolerances are readily obtainable, generating the element diameter provides a cost-effective opportunity to apply close tolerances, especially when centering is important. Flats can also be very tightly controlled during generation.

A rule of thumb is to build integrity into the hardware. It ultimately costs less to be conservative with mechanical tolerances, especially when "low-cost" hardware requires hours of bench work and alignment time to set and hold the optics properly.

Edge Coatings. Elements generally require a means of masking the outside edge of the glass to prevent light scattering (see Fig. 4). The edge can be masked with material ranging from felt-tip marker fluid pen to liquid edge cladding, depending on the application.

Sign Conventions. Line illustrations of optical elements or systems always show light beams entering from the left and exiting right. All elements in an optical system should be marked on the edge with an arrow indicating the light-path orientation. It is often easy, for example, to install a double convex lens backwards; the result is a problem that is difficult to diagnose and correct after the fact (see Fig. 5). (Radius of curvature R_1 has a negative sign since its center lies downstream on the light path.)

Doublets and Triplets. Often two or more elements are cemented together and must be mounted as a single lens. The best design enables the set to be supported by the larger or largest element (see Fig. 6). Flats also enable lenses to be more accurately bonded during assembly.

Chamfers (see Fig. 7). At least five benefits arise from eliminating or reducing all sharp edges on an optical element:

- Reduction of stress points;
- Elimination of chipping;
- Elimination of danger of cutting assembler;
- Better element clearance of radii in mounting cell; and
- Lower tooling costs on lens cells because the crucial bore-to-seat dimension can be machined in two simple operations instead of one requiring a special tool (see Fig. 8).

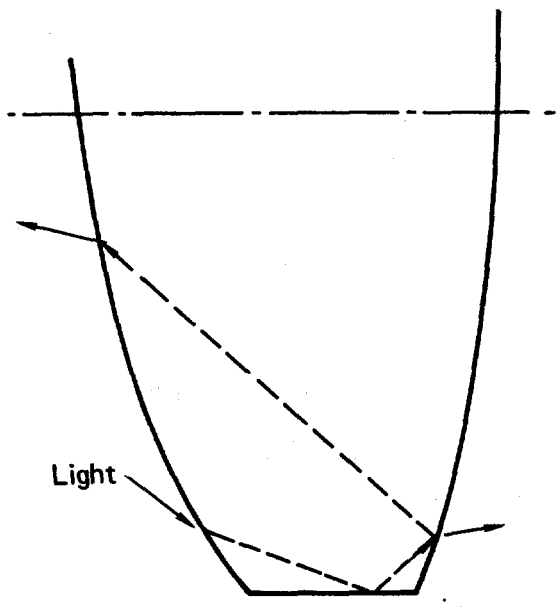

Fig. 4. Edge effect on light scattering.

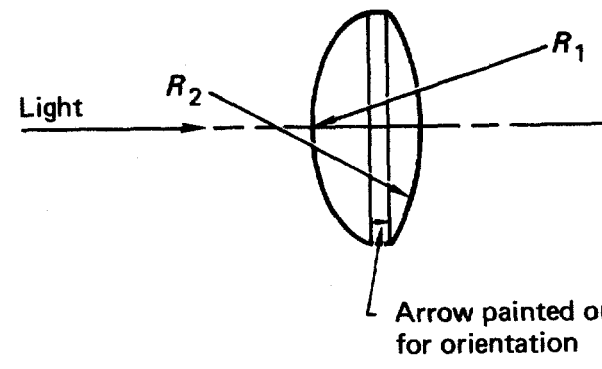

Fig. 5. Sign convention for light path and radii of curvature.

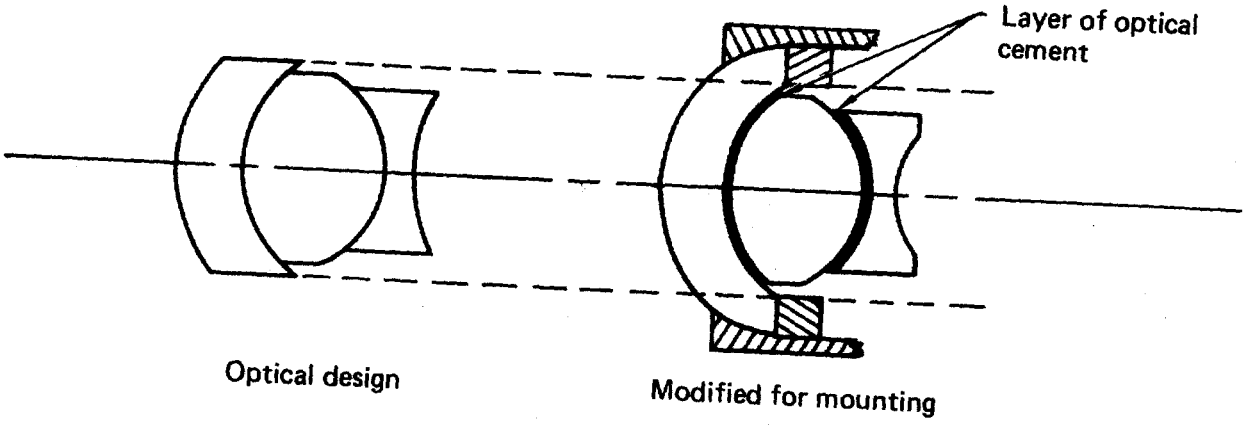

Fig. 6. Cemented elements.

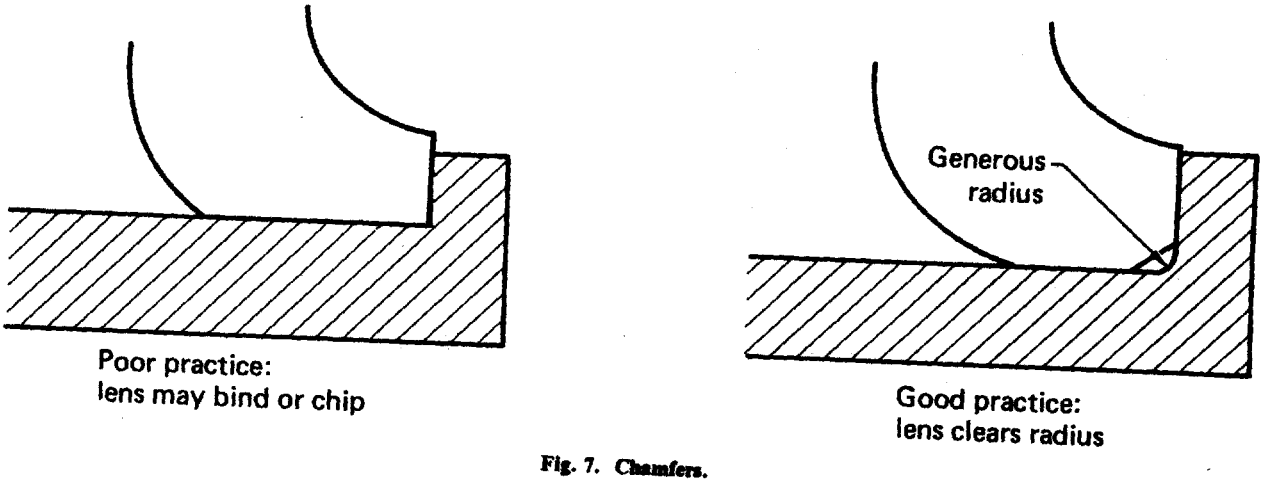

Fig. 7. Chamfers.

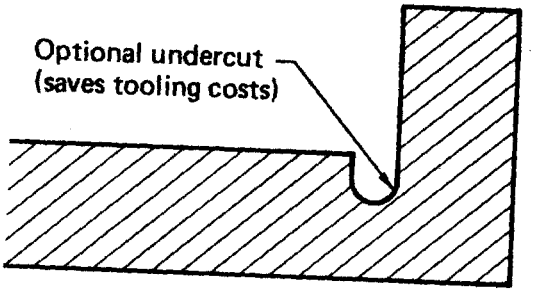

Fig. 8. Undercuts.

--LEPRT

START POINT FOR REDESIGN OF FIELD CORRECTOR

BASIC LENS DATA

SURF	RD	TH	MEDIUM	RN	DF
0	0.	303.995269	AIR		
1	0.	-34.741603	AIR		
2	872.981353	6.350328	SCHOTT F4	1.616592	0.947
3	126.774568	16.510853	SCHOTT BK7	1.516800	0.316
4	-253.546604	19.050985	AIR		
5	0.	19.050985	AIR		
6	431.210434	15.240788	SCHOTT BK7	1.516800	0.316
7	-100.903769	7.620394	SCHOTT F4	1.616592	0.947
8	-196.458614	508.320000	AIR		
9	-53.354108	5.000000	SCHOTT BK7	1.516800	0.316
10	-65.941015	18.200000	AIR		
11	-9213.100999	5.000000	SCHOTT BK7	1.516800	0.316
•12	93.893453	3.287101	AIR		
13	0.	0.	AIR		

REFRACTIVE INDICES

SURF	N1	N2	N3	N4	N5
2	1.616592	1.628477	1.611643	1.638275	1.608909
3	1.516800	1.522377	1.514323	1.526685	1.512894
6	1.516800	1.522377	1.514323	1.526685	1.512894
7	1.616592	1.628477	1.611643	1.638275	1.608909
9	1.516800	1.522377	1.514323	1.526685	1.512894
11	1.516800	1.522377	1.514323	1.526685	1.512894

SPECIAL CONDITIONS

SURF	CONDITION	
12	FNBY HLD TO	8.62000

SOLVES

SURF	TYPE	PARAMETER	VALUE	SLV DATUM
12	PY	TH	3.287101	0.021000

REF OBJ HT		REF AP HT	OBJ SURF	REF SURF	IMG SURF
-1.691000E+01	(3.18 DG)	32.65249	0	5	13

EFL	BF	F/NBR	LENGTH	OID	T-MAG
56.2223	3.2871	8.62	620.4243	892.9651	-1.927272

WAVL NBR	1	2	3	R	5
WAVELENGTH	0.58756	0.48613	0.65627	0.43584	0.70652
SPECTRAL WT	1.0000	1.0000	1.0000	1.0000	1.0000

APERTURE STOP AT SURF 5 (EN ADJUSTMENT)

Fig. 9. Computer-generated optical design.

Sag of Lenses and Mirrors

Computer Lens Design. Sophisticated computer codes now "design" many lens systems; however, the designs take the form of detailed specifications that must be interpreted into hardware by the engineer.

The computer-generated lens data sheet presents information in a particular format (see Fig. 9): *Optical components are designated by surfaces separated by a particular index of refraction, not by their elements. The spacing of the surfaces is presented as a physical dimension from the center of one surface to the center of another surface. The programs also give the radius of curvature of each surface.*

Sag Calculation. Mounting the optical components in a manner that maintains the separations specified in the code requires the engineer to calculate the *sagitta* or "sag" of the lens. This sag is the distance along the optial axis from the center of the surface to the *mounting flat.* Figure 10 illustrates the technique.

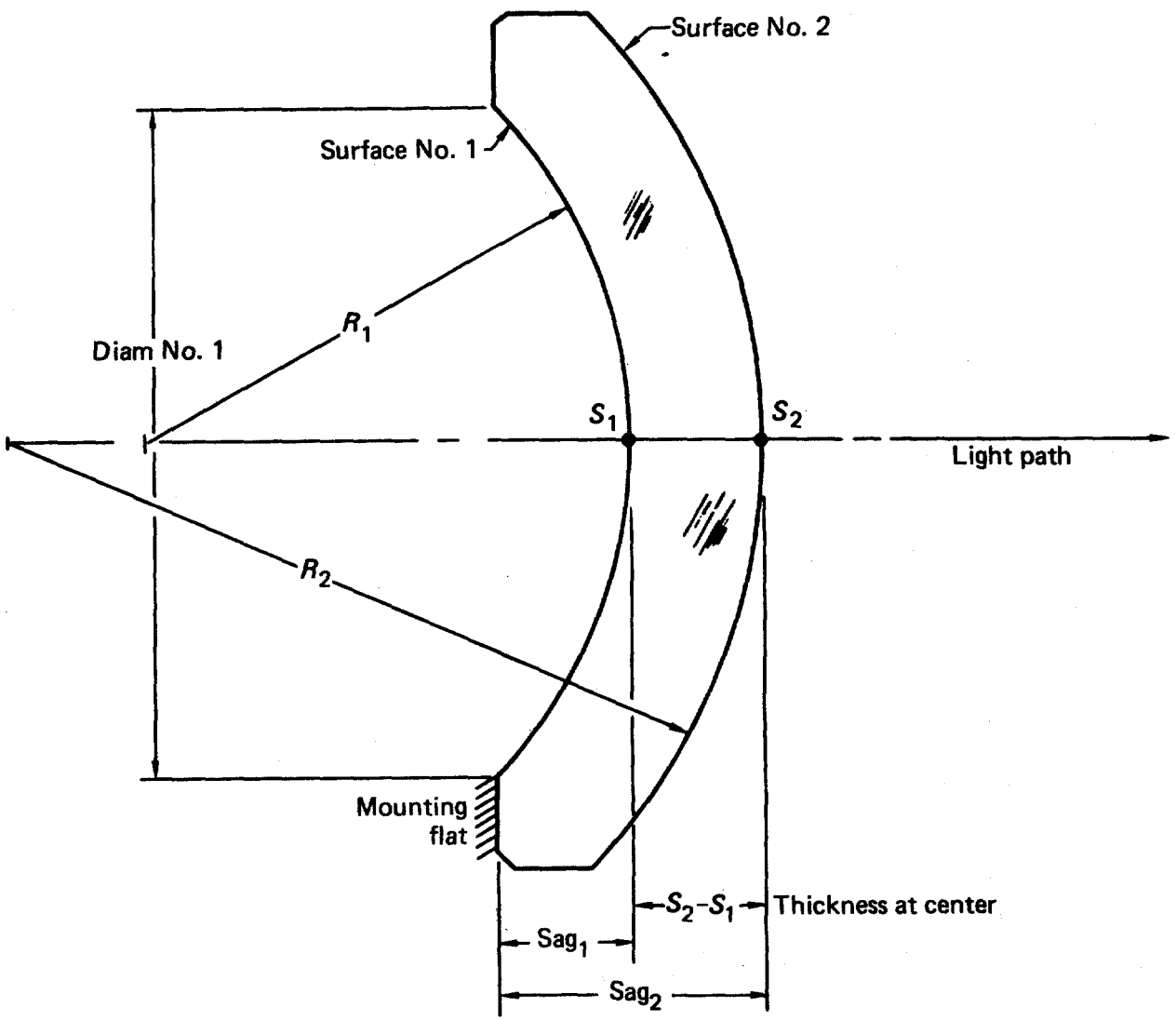

$$Sag_1 = R_1 - \sqrt{R_1^2 - (D_1/2)^2}$$

Where: R_1 = radius of curvature of surface No. 1

D_1 = diameter of glass at edge of mounting surface (where R_1 intersects the flat)

$Sag_2 = Sag_1$ + center thickness $(S_2 - S_1)$

Fig. 10. Sag to a flat on a lens.

Contact Diameter. The type of lens shown in Fig. 11 presents an additional mounting problem. Since it lacks a flat, a seat with an angular shape must be used to mount the glass.

The most satisfactory method of designing a lens seat or retainer is to pick a point midway between the clear aperture and the outside diameter of the glass (designated the *contact diameter*). Sag can be calculated as before using *contact diameter* for D.

$$\text{Sag}_1 = R_1 - \sqrt{R_1^2 - (D/2)^2}$$

(Because of sign convention R_1 is negative, Sag_1 is negative.)

Contact Angle. The angle tangent to the radius of curvature at the contact diameter is portrayed in Fig. 12, where the contact angle $\alpha = \cos^{-1}$ (contact diameter/$2R_{\text{of curvature}}$). The result of using this technique is a securely mounted lens (see Fig. 13).

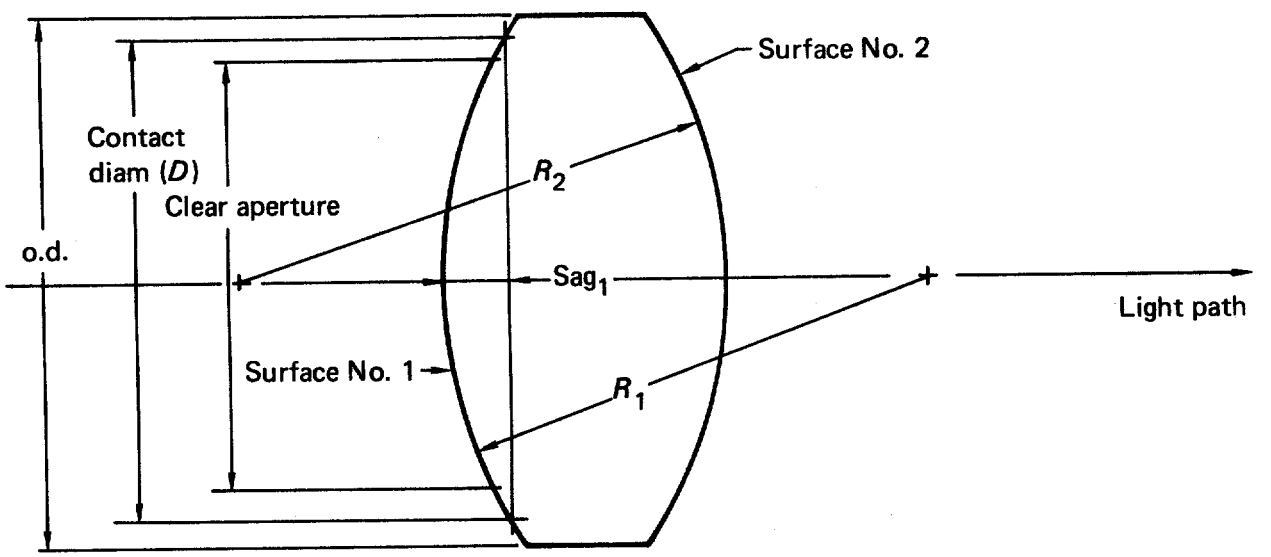

Fig. 11. Sag for a lens without a flat.

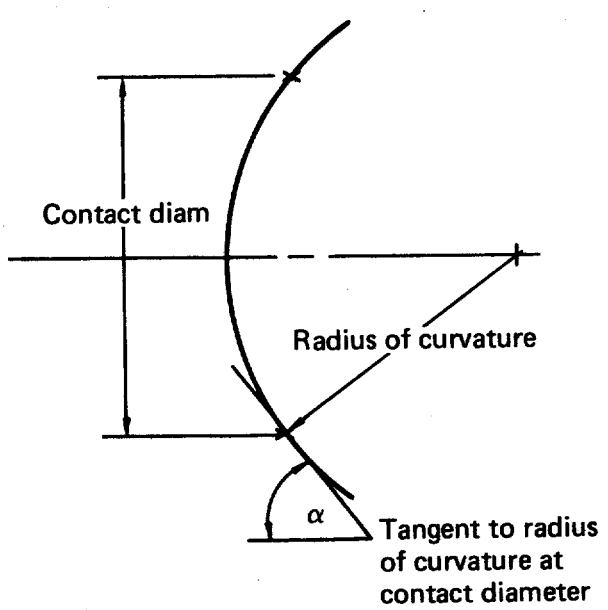

Fig. 12. Contact diameter and angle.

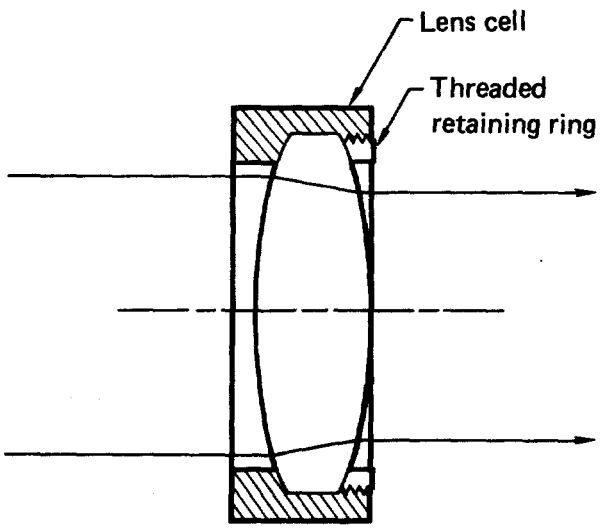

Fig. 13. Lens mounted with tapered surfaces.

LENS CELL DESIGN

Introduction

Lens cells hold optical elements in proper position and maintain position throughout the range of conditions encountered in the working temperature, pressure, and vibration environments of the optical systems. A typical lens cell assembly consists of lenses, spacers, retainers, baffles, cell, and interface surface.

Environmental Considerations

Temperature

Thermal changes will cause lens cells to contract or expand, either loosening or increasing the strain on the glass. The most effective method of minimizing both effects is either to maintain the thermal environment very carefully or to specify lens cell materials that closely match these coefficient of thermal expansion of the optical elements. (For most applications, aluminum satisfies the thermal expansion criteria.)

Two other techniques for minimizing thermal effects are available for more complex situations. The first is designing a spring into the system, making the seat of one of the elements flexible (see Fig. 14); the second is to select material with very low coefficients of thermal expansion.

Figure 14 shows an undercut in the lens cell seat that flexes when thermal strain occurs. The engineer simply calculates the minimum wall thickness required. Some preload must also be built into the system to handle differential expansion, and this is best done either by carefully torquing the retaining ring or by incorporating a flexible retaining ring.

Nylon retaining rings have proven effective over moderately large excursions ±22° C (±40° F). Often lens cells can be bolted together with spacers of various materials to null out thermal expansions. Rubber, particularly 12-durometer silicone sponge sheet, is a nearly ideal material for packing between lenses and cell seats. The rubber absorbs small dimensional errors in flatness or roundness, yet holds the glass in place. Long-term creep effects are unknown but no problems are anticipated (it has been applied on the Shiva laser). The impurities added in processing silicone rubber (e.g., talcum powder) can be reduced to an acceptable level by baking at 250° C (+0, -50° C) for 24 hours in air. (Temperatures in excess of 250° C cause the rubber to become brittle and useless.)

The second technique for minimizing thermal effects is used when stability under thermal load is essential; beryllium is used for cell material. Beryllium is the structural metal with the highest modulus of elasticity; it has a coefficient of thermal expansion similar to that of steel (Be $\alpha = 3.56 \times 10^{-6}$ m/m/° C (6.4 $\times 10^{-6}$ in./in.° F; steel ranges from 3.34 to 4.34). Invar is another low-thermal-coefficient material but it is heavy

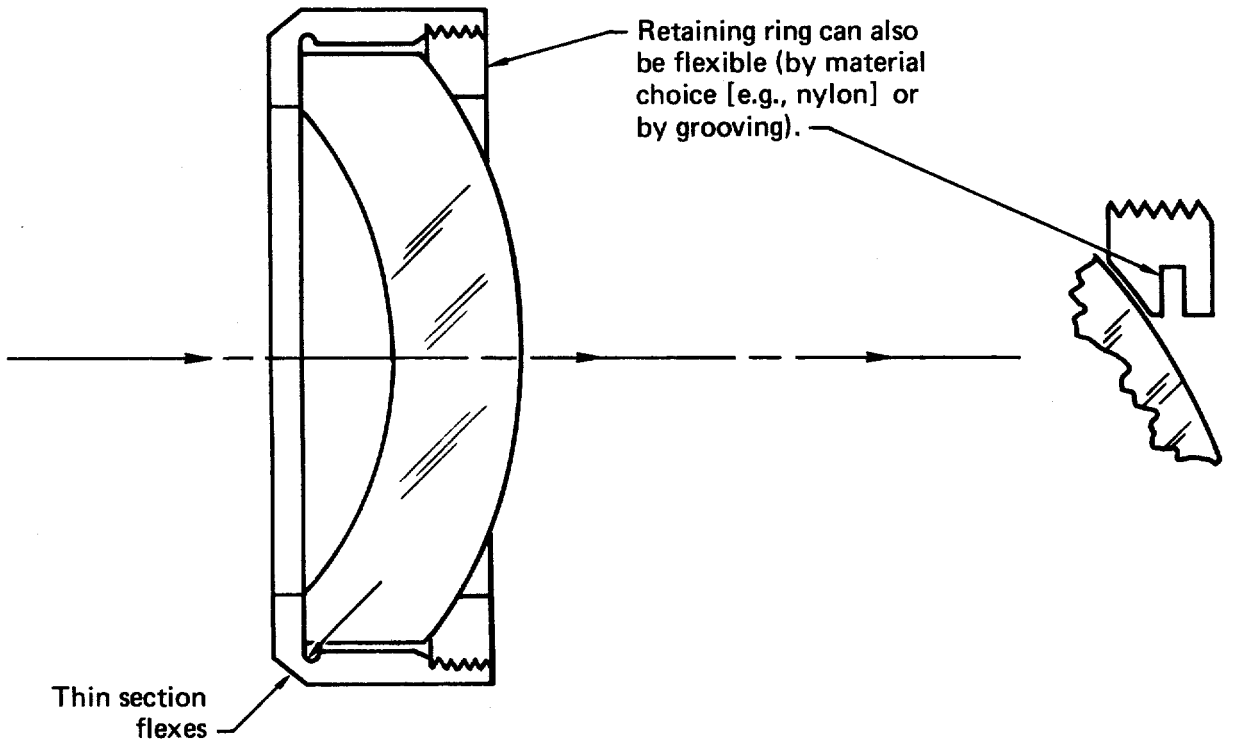

Fig. 14. Temperature-compensating lens seat.

and finds its best application as metering rods. These rods tie separate lens subcells together and maintain the optical spacing regardless of how the cell expands or contracts. (See Fig. 15 for a typical application).

When high stability is required, rubber and plastic are risky because they creep. As long as glass is mounted in pure compression, metal-to-glass seating is acceptable. This usually means expensive hardware because the metal/glass interface must be toleranced to avoid bending the glass.

Vibration

The major problem resulting from vibrational loading is the tendency for optical elements to rotate and retaining rings to loosen. The retaining-ring torque cannot usually be high enough [$>6.89\times10^6$Pa (1000 psi) stress level] to prevent rotation. The solution is to secure the element and retainer with an RTV compound as follows:

- Size the bore of the lens cell and diameter of the glass to have a 0.08- to 0.13-mm radial gap. (This lends itself to stock mylar shim sizes.)
- Measure actual glass diameter and lens bore. Select appropriate shim thickness to fill the gap.
- Cut or punch three fairly large holes in the shim placed so that they are equally spaced when the shim is wrapped around an element.
- Drill and tap radially through the cell three holes located about the nominal midpoint of the element when installed.
- Install the lens and shim into the cell; take care to locate the holes in the shim over the through holes in the cell. If the shim is difficult to install, wrap a heat belt about the cell to expand the bore for easier assembly.
- Inject RTV 30 into the threaded holes and allow to cure. The threaded holes will hold the RTV securely in place and the larger shear area of the RTV in the shim will hold the element rotationally secure.

The same technique can be used on the retaining ring. (See Fig. 16 for a typical application.)

Pressure. Lens cells should be vented to the ambient atmosphere between elements or groups of elements to ensure that pressure changes do not cause elements to change figure when ambient conditions are generally stable (e.g., for applications such as the Shiva laser), the threaded retainers and gaps around the elements are sufficient to vent.

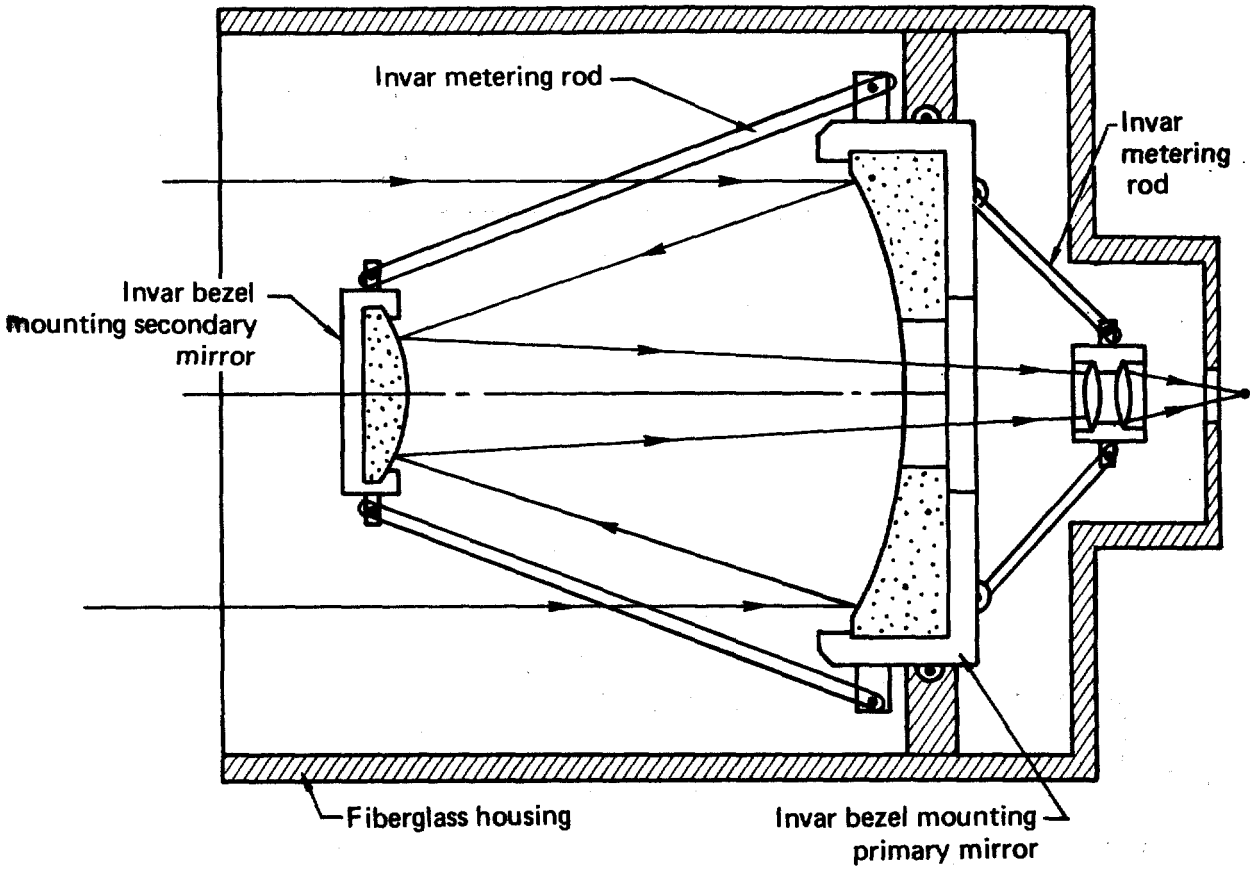

Fig. 15. Application of metering rods for thermal stability (Cassegrain telescope).

The standard method of venting is to run a ball-end mill along the radius of interconnected lens cells through the threads in the cell itself. This diameter can be calculated to match the rate of gas flow required (see Fig. 17).

The vent grooves can channel gas to a common filter such as a Milliporehydroscopic filter to avoid contamination to the interior optical surfaces. This will filter out particulate matter and prevent moisture from forming inside the lens chambers.

Design of Components

Lens Cells

Surface finishes for contact with optics seldom need be better than 63√. If plastic or rubber layers are used between the glass and metal, 125√ is acceptable.

Retaining Rings

Threaded round retaining rings should always be used to secure lenses. Rings can be threaded into place and torqued to desired levels. When the rings contact the glass at an angle, the contact diameter method outlined above should be employed. The rings and cell should be threaded with Class 2 or Class 1 threads, never Class 3. The loosely toleranced threads have sufficient play to aid in centering.
Rule of Thumb: A cell assembly thread is proper if the retainer assembled without glass rattles when the cell is shaken.

Retaining Ring Torque. To determine the maximum torque to be applied, the following empirical equation gives the most satisfactory results

$$T_q = 0.2\, d\ell,$$

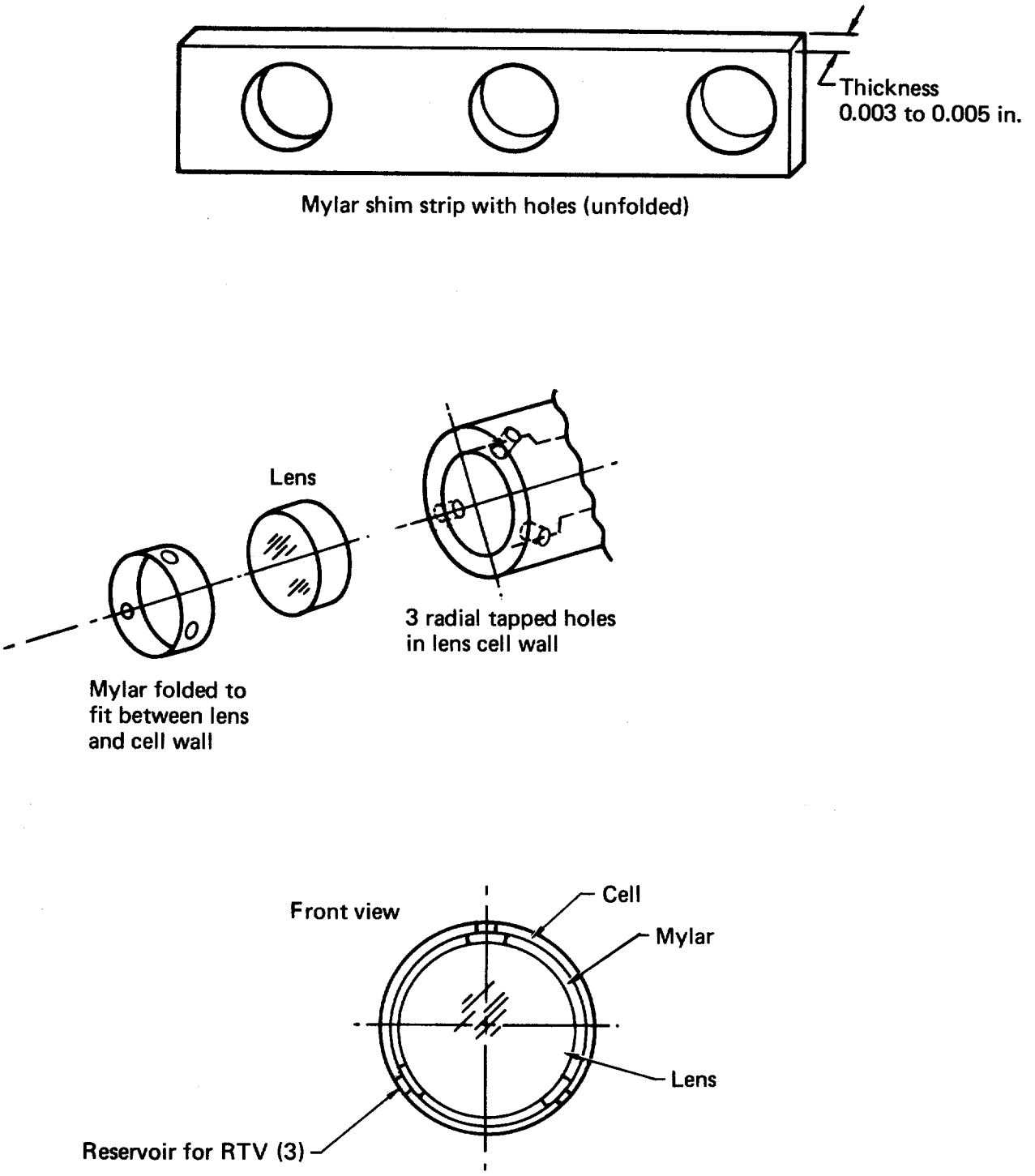

Fig. 16. Technique for preventing lens rotation in vibration environment.

where d = mean diameter of thread and ℓ = max allowable axial load. More refined torque equations hinge on the selection of a value for the coefficient or friction; they are usually more arbitrary than the above relationship.

A *lens should always be checked for strain with a polarizer after torquing.* A sophisticated method of torquing a lens retainer is to apply torque under a polarizer or (even better) in an interferometer. When strain is observed, the torque should be backed off until it just disappears.

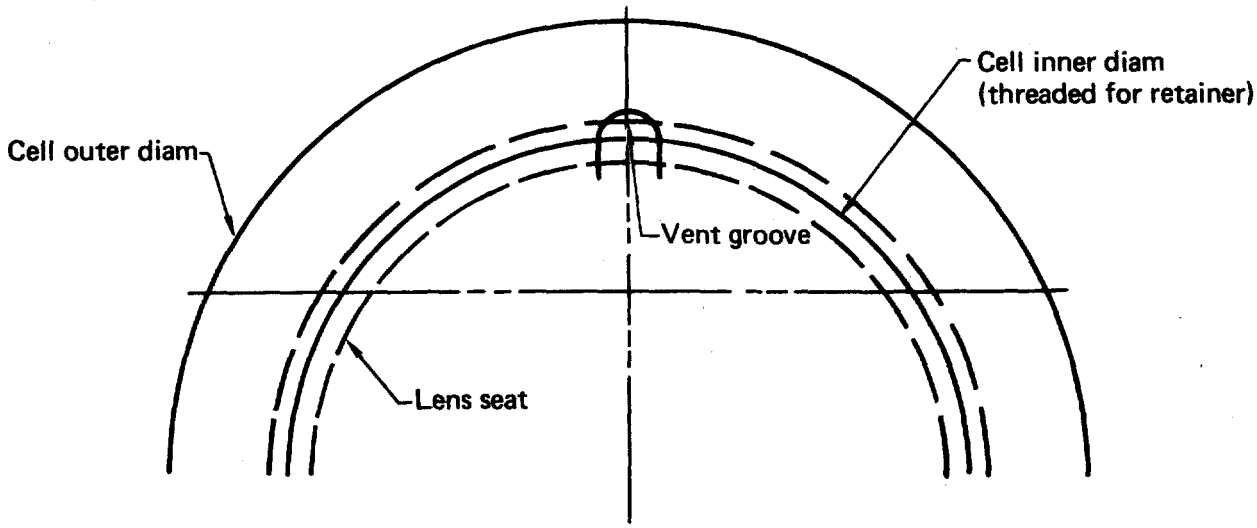

Fig. 17. Vent groove location.

On large systems, stacking more than two elements behind one retaining ring is poor practice. Centering and tilt tolerances become difficult to hold or debug when more elements are stacked, unless they are cemented together.

Materials. Aluminum cells and aluminum retainers will generally gall, but they work well together when anodized. If the expected cycling is minimal between the two (few disassemblies), galling will be negligible. Large diameters (over 15 cm) require more attention; the ring is usually bent and the threads will bind, without adequate lubrication.

Baffles and Aperture Stops

Light traps or baffles can generally be integrated into lens-cell designs by using standard pipe threads. Specifying a thread that nearly fits the baffle requirements also specifies the tolerances and tooling. (Additionally, critical inspection of the thread tolerances [e.g., plug gages, wires, etc.] is not necessary.) A design often states that "razor sharp" edges are required on baffles or aperture plates; a radius of 0.05 to 0.10 mm is usually acceptable.

Aluminum usually does not accept sharp baffle grooves; it becomes gummy and tears during fabrication. The ordinary acceptable range is 0.05 to 0.10 mm radius. Much sharper edges can, however, be machined in steel.

Spacers

Spacers are used to correct the positioning of optical elements for errors occurring between initial design and final fabrication. These errors are due to variations in glass properties affected by pouring and fabrication. The index of refraction changes from the nominal catalogue value to the "melt" value. The radii of curvature are changed to compensate for the variations. Accordingly, lens cells should be designed to provide space for insertion of spacers between elements and seats. After the final data are available, the appropriate spacer thickness can be calculated and the lens assembled.

Two methods are used to prepare spacers. The first is to estimate the range of spacer thicknesses possible and to machine one for each possible tolerance condition. This requires manufacturing a number of spacers that will not be used, but it saves time at final assembly. The second method is to prepare oversized blank spacers, calculate the proper thickness, and then remachine. This saves material and may not be inefficient.

In both cases:

- Measure depth of bores on lens cells;
- Measure center thickness and sag of the lens elements;
- Obtain new computer run of final optical design (incorporating all "melt" and fabrication variations);
- Calculate required spacer;
- Select or fabricate spacer; and
- Install/checkout.

When a sufficient quantity of similar lenses are to be built, the best approach is to develop a form onto which the inspection data is entered. This enables calculation of the proper spacer for each lens. The form should contain a sketch and space for optical values, mechanical values, serial numbers of lenses and cells, calculations, and spacer-thickness results.

Thicknesses should be calculated across contact diameters to ensure proper spacing.

MIRRORS AND MIRROR MOUNTS

Mirrors are the most difficult optical elements to mount. Since the optical path error induced by bending is dependent on the angle of incidence, distortion is approximately doubled by reflection from the mirror's surface.

Surface vs Wavefront Error

When interpreting optical design requests or interferometer data, it is important to specify whether or not error (usually expressed as a fraction of wavelength at some part of the spectrum) is *surface*. *Surface* indicates the optical path difference occurring at the primary reflective surface; it is a statement of that surface's quality. *Wavefront* is the optical path difference observed as a result of reflection from the surface and the distortion due to doubling. *Wavefront* errors are those seen in photographs taken from interferometer setups. For a mirror at normal incidence, *wavefront* error is double the *surface* error. For example,

$\lambda/12$ *surface* error $\rightarrow$ $\lambda/6$ *wavefront* error; and

$\lambda/4$ *wavefront* error $\rightarrow$ $\lambda/8$ *surface* error.

While opticians polish mirrors to *surface* specifications, they must measure quality via *wavefront* photographs.

Wavelength vs Physical Dimensions

Designing an optical mount to maintain a surface to some fraction of a wavelength (e.g., $\lambda/4$) requires conversion of the fraction to a physical number with a dimension. After conversion, the analysis can be completed as a typical strain equation. For example, if the specification reads,

"Surface to be no worse than $\lambda/4$ @ 1.06 μm"

(Both the fraction of a wavelength and the spectral band must be expressed. The Shiva laser acts in the 1.06 μm-wavelength range.)

Then,

$$1\ \mu\text{m} = 1 \times 10^{-6}\ \text{m}\ (39.37 \times 10^{-6}\ \text{in.} \approx 40 \times 10^{-6}\ \text{in.}).$$

At 1.06 μm, one wavelength is

$$1\ \lambda = 1.06\ \lambda\text{m} = 1.06 \times 1 \times 10^{-6}\ \text{m}\ (41.7 \times 10^{-6}\ \text{in.}).$$

The tolerance is $\lambda/4$ @ 1.06 μm

$$\lambda/4 \times 41.7 \times 10^{-6}\ \text{in}/\lambda = 10.43 \times 10^{-6}\ \text{in.}$$

The strain analyses would be calculated to ensure that the mirror does not deform more than 10.43×10^{-6} inches. Optical drawings often specify a *wavefront* error acceptable at some other spectral band than the one actually used because facilities to test at the desired wavelength are unavailable. Accordingly, the tolerance is specified at a more accessible wavelength, such as 0.633 μm. For example, the Shiva first turning mirror operates at 1.06 μm λ, but its specification requires it to meet $\lambda/12$ *wavefront* at 0.633 μm, which is the wavelength of a standard Helium Neon laser [red beam].

*Standard deformation equations must often use the English system of measurements rather than SI.

Surface deformations must be within

$1\ \mu m = 40 \times 10^{-6}$ in.,
$0.633\ \mu m = 25.32 \times 10^{-6}$ in. for 1 λ,
$\lambda/12$ wavefront $\times\ 1/2 = \lambda/24$ surface error, and
$1/24 \times 25.32 \times 10^{-6}$ in. $- 1.055 \times 10^{-6}$ in.

The *wavefront* specification also states that the $\lambda/12$ must be peak-to-valley. The entire mirror's clear aperture must meet this quality specification to prevent self-focusing. (Shiva specifications call out both peak-to-valley and slope-error limits. Other methods, such as r.m.s., are used, depending on the application.)

Path Error and Astigmatism

The actual path error ϵ *(wavefront)* depends on the angle of incidence θ:

$$\epsilon = 2\delta \cos \theta,$$

where δ is the mirror deformation and θ is the angle of incidence. As δ increases, ϵ decreases, but the area of the mirror used by a given beam diameter increases. (This is why a spherical deformation on a surface can cause astigmatism.)

Astigmatism from a mirror that has sagged spherically can be calculated by

$$\epsilon = 2\delta (\cos \theta - \cos \theta),$$

where ϵ is the sag over the diameter of the encircled beam (normal to the beam) and θ is the angle of incidence.

Interferometry

Determination of small dimensional variations in an optical surface (e.g., 2.54×10^{-4} mm is extremely difficult with direct measurement; a better method is interferometry – analysis of patterns of interfering light beams.

Interferometers

Two principal types of interferometers are available for measuring reflective and transmissive wavefront errors. Both are used at LLL to evaluate optical components for laser applications: the Fizeau interferometer (see Fig. 18) and the Twyman-Green interferometer (see Fig. 19).

Interferograms

The Appendix is a guide to the nature, quality, and interpretation of interferograms.

Mirror Mounts

Edge Supports

Edge supports hold the periphery of a mirror in place while allowing the central area to deform because of gravity. This technique is often acceptable if the sag due to gravity remains within tolerance or induces only simple power.

Simple power (spherical curvature of the wavefront) induces a shift in the focus point that can be corrected easily by adjusting the distance of the target from the focal point with a focusing lens. The same method can apply to rectangular or other odd-shaped mirrors, but the gravity sag will be more complex. The sag will be greater along the longer axis of the mirror and less along the short axis.

Edge support can be used only if the aberrations are less than the maximum tolerance acceptable for the component. As a rule, then, if the worst-case analysis for strain does not exceed the optical tolerance, edge support may be employed. The key acceptable error must come from the system specification.

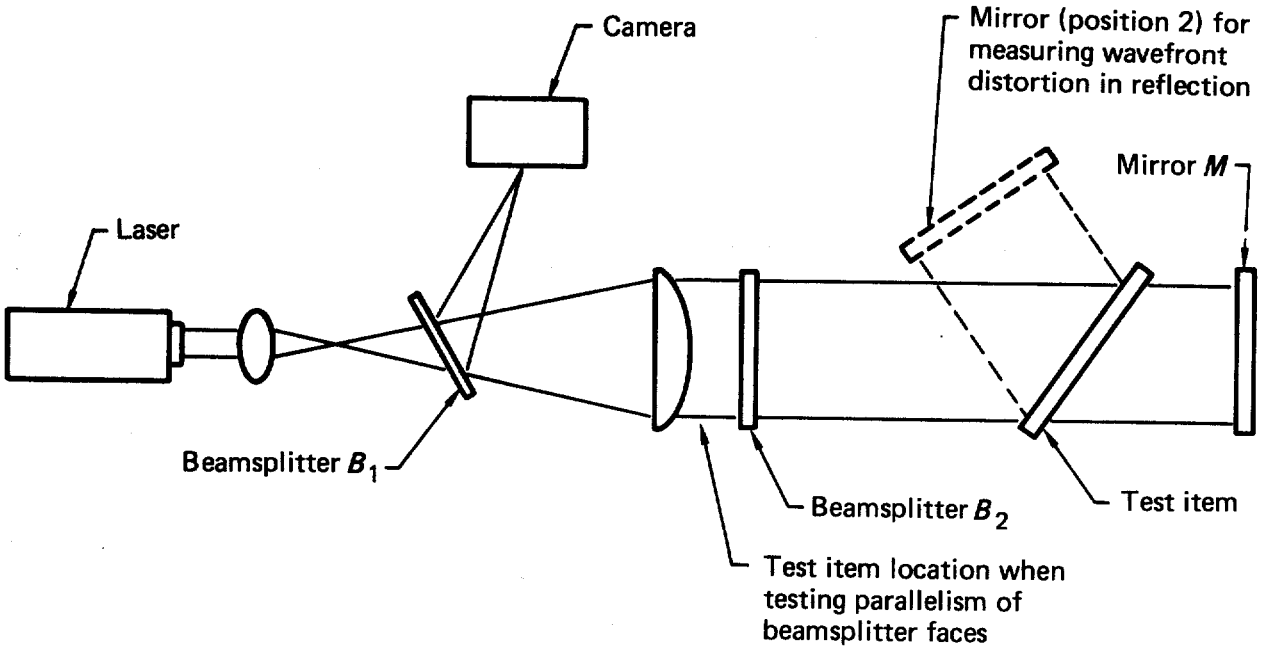

Fig. 18. Fizeau interferometer.

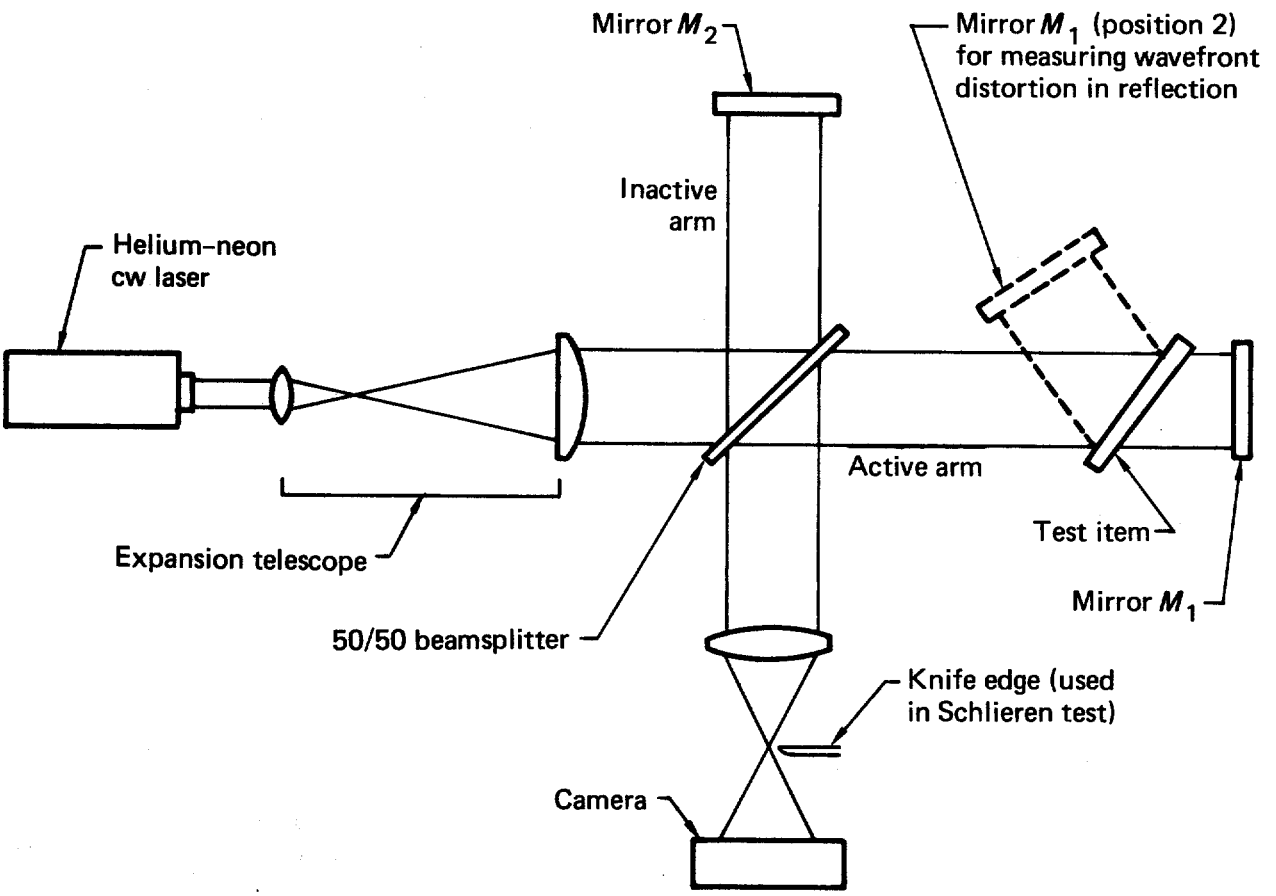

Fig. 19. Twyman-Green interferometer.

Three-point support. The simplest way to support a mirror, whether round or rectangular, is to set it on three points. Since three points define a plane, the mirror rests in a strain-free condition. Clamping the mirror directly over each of the three points permits holding the support in any orientation. The most important requirement for the three-point (or any other mount) is to ensure the clamping is directly in line with the support (see Fig. 20).

The three-point edge support is useful in any orientation for mirrors that are stiff enough or where tolerances are loose enough to accommodate a gravity deformation that takes the shape of a saddle or hyperbola. Small mirrors (under 15 cm diameter) can usually be mounted satisfactorily this way. Only when wavefront errors exceed $\lambda/12$, must more care be given to the mount. Most commercially available mounts employ this technique (see Fig. 21).

The safest approach to mounting mirrors is always to determine whether the three-point mount is workable before exploring other methods. Manufacturing three flat pads is certainly easier than maintaining good tolerances over large surfaces]

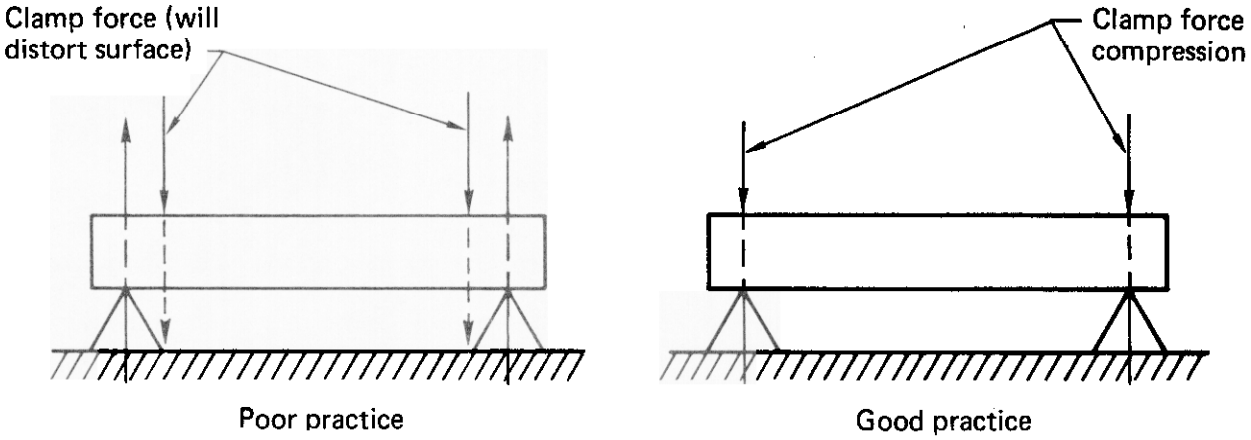

Fig. 20. Relationship between supports and restraints.

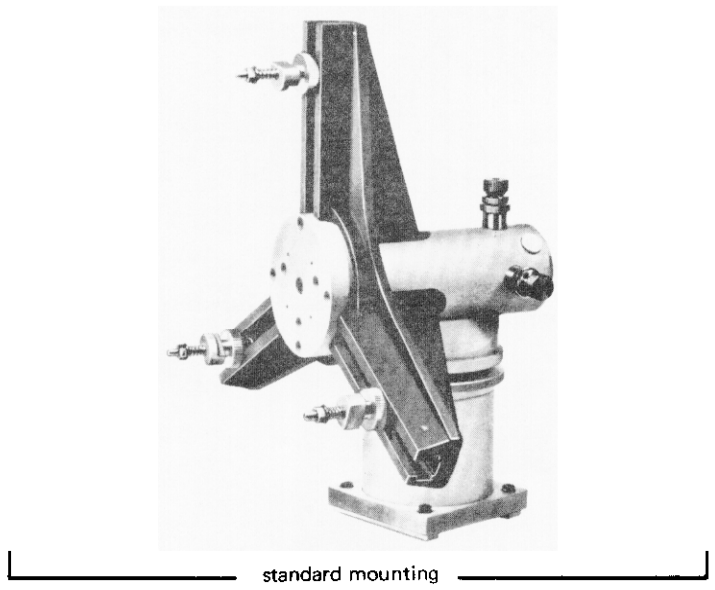

Fig. 21. Commercial three-point support (source: Ref. 3; reprinted with permission).

Continuous Edge Supports. Either the specification of a saddle shape or a sealing requirement (gas shroud), etc., may necessitate a more complicated mount than three points. Sealing and maintaining optical integrity are difficult, since the pressure of the gas may deform an element, or clamping a seal can violate the line of action on the support. A mirror placed on a ledge about its edge would rest on the three highest points on the seat. The seat could itself be lapped to optical quality, bringing the three points, very close to the plane of the ledge. As with the three-point mount clamps, the restraining clips must sit over the three seat points, otherwise distortion occurs. This technique is necessary for high dimensional stability.

The solution to many mounting problems is placement of a silicone rubber sheet (mentioned above under "Cell Design") between the mirror and the ledge. The rubber should compensate for small surface variations and can be an effective seal. However, the cold flow of the rubber can hamper long-term stability.

The clamps restraining the glass should be short to minimize eccentric loading into the glass. Many short clips are better than a few long ones because the short clips can be removed from local areas that distort the glass (i.e., this type of mount can be "tuned" to minimize strain). The clips are simply backed off from areas not over the three coplanar points, which are always present, even under the rubber. In fact, the short-clip rubber strip has worked well without the rigors of tuning.

Large Mirror Supports. Mirrors over 15 cm diameter or with wavefront specifications exceeding $\lambda/12$ may be edge-mounted as follows:

Check the mirror for sag under a theoretically perfect edge support. For round mirrors[4] (Fig. 22),

$$\max y = -\frac{3W(m-1)(5m+1)a^2}{16\pi E m^2 t^3} \quad \text{(at center)},$$

where W = total applied load in kg; w = unit applied load (kg/mΘ), t = thickness (m); and m = reciprocal of , (Poisson's ratio).

For rectangular mirrors[5] (Fig. 23),

$$\max y = \frac{0.1422\, wb^4}{Et^3(1 + 2.21\alpha^3)}$$

This theoretical number may be taken as the design goal of the mirror mount system.

The mirror is usually supported through two structural elements. The first is the bezel, basically a stiff frame in which the glass rests and receives edge protection. The second element is the interface between the

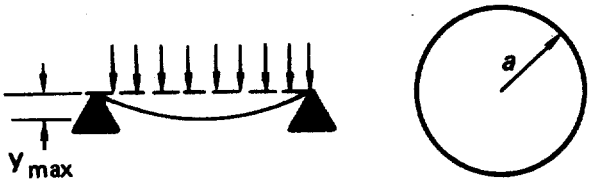

Fig. 22. Theoretically perfect edge support, round mirror.

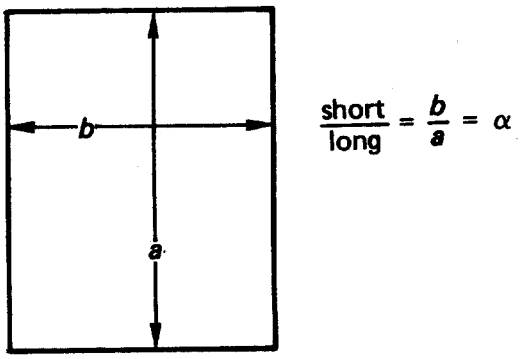

Fig. 23. Theoretically perfect edge support, rectangular mirror.

bezel and base plate, which may be two points – if a trunnion axis on a gimbal – or three or more legs, depending on the configuration. In order to effectively hold the "theoretical" sag value, the mount must be stiffer than the glass itself.

Design Sequence—Round Mirrors. Cantilevered beam equations are used that assume the mirror bezel system is fixed above the trunnion diameter[6] (Fig. 24):

$$\max y = -\frac{1}{8}\frac{w\ell^3}{EI} .$$

If the deformation of bezel and glass supported in this mode can be made less than or equal to the uniform edge support deviation, the analysis is complete.

Design Sequences—Rectangular Mirrors. The process begins with the deformation of the rectangle under uniform support, which is the design goal. An efficient way to calculate a worst-case analysis is to compare two conservative support cases that bracket the difficult case actually at hand.

The three-point support shown in Fig. 25a is difficult to analyze directly. Instead, the following procedure can simplify the problem:

- Assume the mirror probably sags more along the long axis than the short axis.
- Assume the mirror is cantilevered with one short edge fixed (Fig. 25b),

thus,

$$\max y = -\frac{1}{8}\frac{w\ell^3}{EI}$$

- Adjust the section properties of the bezel until its stiffness prevents a sag greater than the uniform edge supportive case. (This is best done by adding a rib along the axis [Fig. 25c].)
- Next assume that the mirror is supported at the four corners (Fig. 25d) and that a is the average length of the sides. Then,

$$a = \frac{\text{long axis} + \text{short axis}}{2} .$$

For a square that is simply supported at the four corners[7]:

$$\max y = \frac{0.0257\, wa^4}{D} .$$

when

$$EI = 0$$

(the section modulus of the elastic foundation about the periphery of the plate is assumed to be nonexistent, leaving true supports only at the corners), where

$$D = \frac{Et^3}{12(1-\nu^2)} ,$$

E = Modulus of elasticity (Pa),

t = Height (m),

ν = Poisson's ratio, and

w = Weight distribution (kg/m).

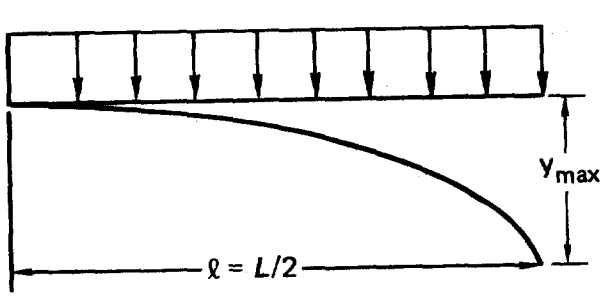

Fig. 24. Schematic of round mirror supported in gimbals (L = mirror diameter).

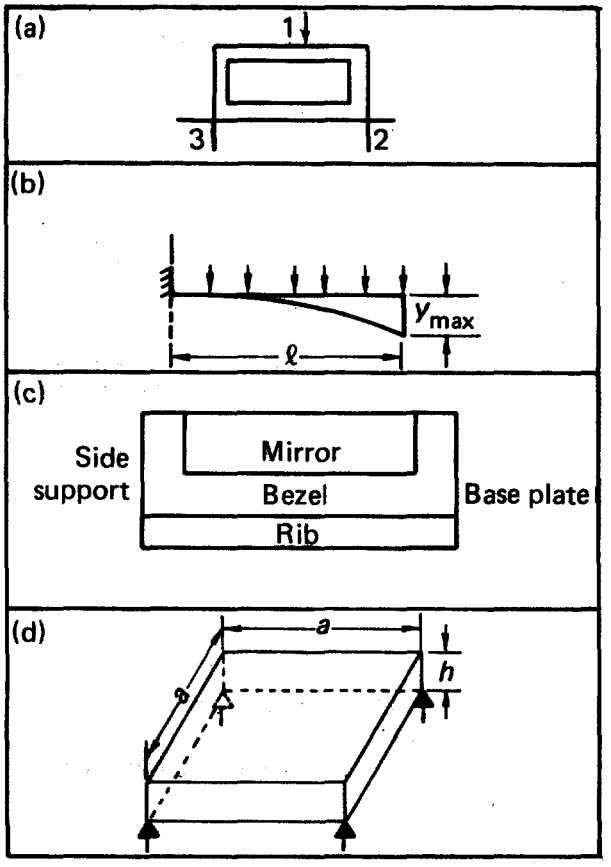

Fig. 25. Analysis of rectangular mirror with three-point support: (a) basic configuration; (b) cantilever assumption of one short edge fixed; (c) addition of rib along the axis; and (d) assumption of four supported corners.

Therefore,

$$\max y = \frac{0.308(1-\nu^2)wa^4}{Et^3},$$

where ν = Poisson's ratio and w = unit applied load (kg/m).

- Adjust t until the theoretical uniform support value is obtained.
- Check the short axis to establish whether ribs are needed.

Computer techniques. A reliable method of analyzing mirror support systems is to develop finite-element computer models. More sophistication is possible with respect to support methods and — especially — local deformation. The technique is worth the time required to generate a usable model.

Large Mirror Mounts

A mirror that operates vertically or close to vertically is usually mounted about its periphery. While large mirrors are relatively stiff on edge, they exhibit some sag due to weight. They tend to become thicker below the center and thinner above.

Sling Mounts. The simplest large mirror mount is the sling, a wide band of webbing or steel that cradles the mirror (Fig. 26). The band straddles the center of gravity of the mirror, adding stability. Other supports, usually threaded rods with pads are located in the back, while safety clips are attached a few thousandths of an inch in front of the mirror (not touching it directly, to avoid strain).

The sling is an ideal supporting system, since a cosine distribution of forces is generated to equalize the mirror's mass (see Fig. 27).

An improvement on the solid band sling, uses prestretched aircraft cables. This system allows more adjustment of tip because all points can pivot (see Fig. 28). Cables should be prestretched to eliminate both long-term creep due to the supported mass and unnecessary realignments.

Other Vertical Mounts. Mercury rings have been successfully incorporated on vertically mounted mirrors. An inner-tube-like device is attached to the periphery of the mirror, and a large reservoir of mercury is placed in

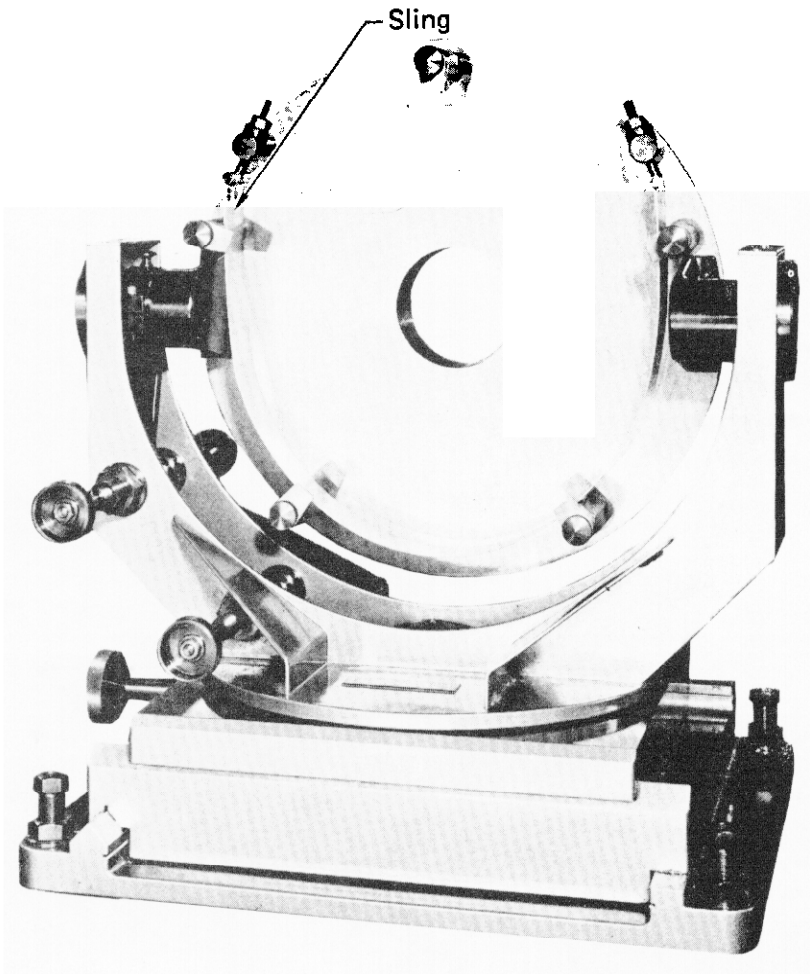

Fig. 26. Sling-mounted mirror (source: Ref. 8; reprinted with permission).

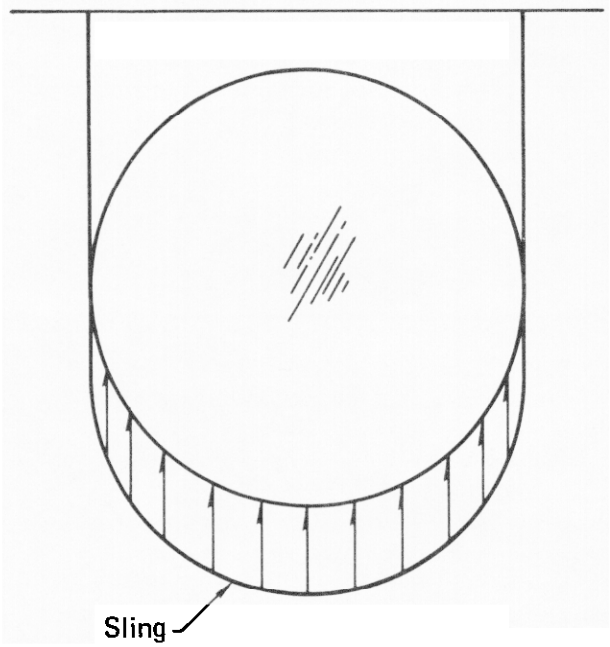

Fig. 27. Cosine distribution of forces induced by sling mount.

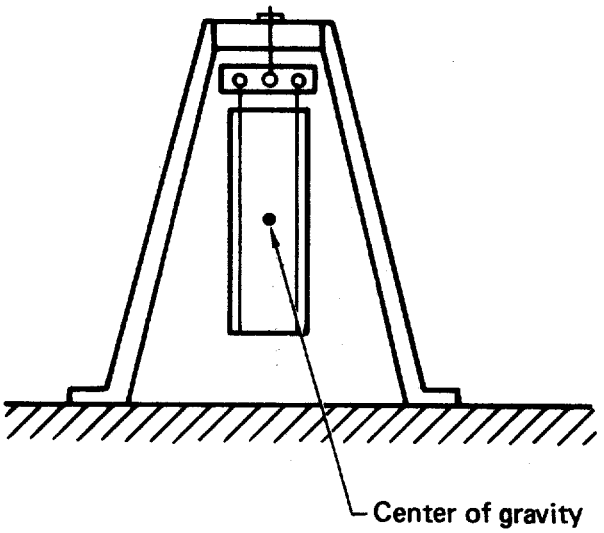

Fig. 28. Pivoting cable sling mount.

the tube. The mercury exerts a resistive force proportional to the strain. Mercury-bag mounts are expensive, fragile, and complex; but they are useful when very fine support is needed.

Pneumatic and hydraulic rings have also been successfully used on mirrors, but they also are expensive and cumbersome.

Back Support for Large Mirrors. When gravity sag is too large to be optically acceptable, a completely new approach must be taken to mount the mirror. The backside of the mirror must be stiff enough to shore up portions that are sagging in excess of surface specification, as shown in Fig. 29. The major difficulty is supporting the mirror uniformly without introducing distortions. The mirror is constrained on the edge, but supports in the center would distort the surface. The problem is classical with all astronomical telescopes and many novel mounting schemes exist.

Mount/Mirror Integration. A large, unwieldly mirror is best polished and tested in its mount. The mount need only be properly oriented to the working attitude when tested. This method insures that errors developing from sag or from the mount itself are minimized during optical fabrication. (This is not practical when mount materials [rubber, paint, etc.] would be subjected to harsh environments during coating operations. Then it is necessary to polish and coat the mirror after removal from the mount.)

Bonding the mirror to the back structure with silicone rubber pads is a common practice, but care must be taken to locate the pads properly so that they support equal segments of the mirror's mass. This prevents gravity sag and the opposite effect of too much resistive force pushing back on one segment of the mirror. The entire philosophy is defined as the "floatation of mirrors." Much valuable information on supporting mirrors across the back was done by Albert G. Ingalls and his associates.[9]

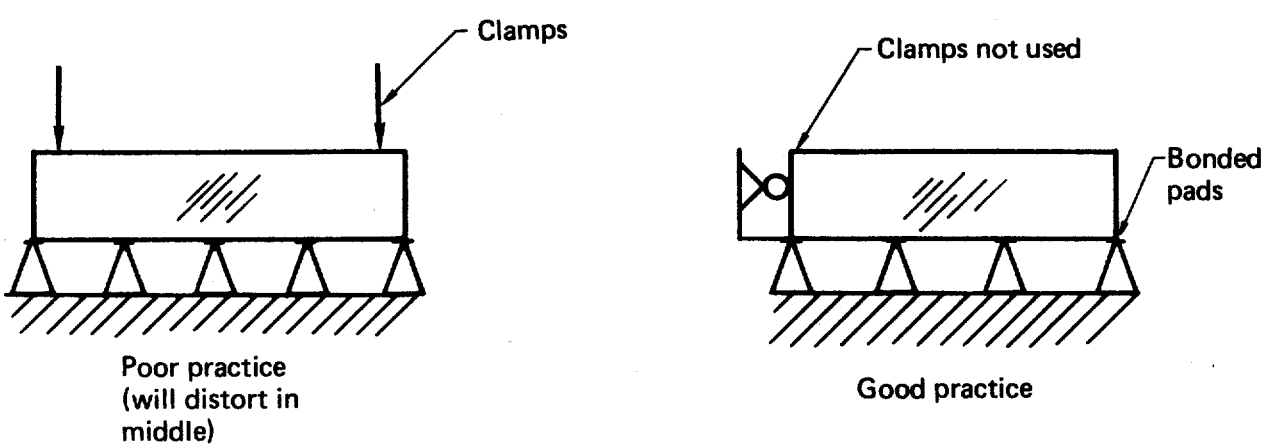

Fig. 29. Back support mounts.

A Three-Point Support. A round mirror must be divided into a ring and a disk each having the same area (mass). For a 0.2-m-diameter mirror (see Fig. 30), the disk area,

$$A = A_1 + A_2 = \pi r^2 = \pi(0.1m)^2 = 0.0314 \text{ m}^2,$$

and the area of one-half disk

$$A_1 \text{ or } A_2 = A/2 = 0.0157 \text{ m}^2.$$

The inner-circle radius is calculated from A/2:

$$0.0157 \text{ m}^2 = r_i^2$$

thus,

$r_i = 0.0707$ m.

Accordingly, the inner diameter

$D_i = 2r_i = 0.1414$ m.

With respect to the outer diameter, D_o,

$$\frac{D_i}{D_o} = \frac{0.1414 \text{ m}}{0.2000 \text{ m}} = 0.707 .$$

Three equally spaced support points should be located on a circle with a diameter equal to 0.707 times the outside diameter of the glass. (This 0.707 diameter is conventionally termed the "equilibrium diameter" — $D_{eq.}$ [see Fig. 30].)

Eighteen-Point Support. Eighteen-Point Supports use the fundamental principle of supporting equal segments of mass (see Fig. 31).

$$D_{ea} = \text{Diameter of equilibrium of annulus} = \sqrt{2D^2/3},$$

where D is the outer diameter of the disk,

S = Distance between the outer circle supports,
= $D_{ea} \sin 15°$,
T = Radius of circle to envelop triangle,
= $S/2 \cos 30°$,
R = Radius to center of 3-point triangular support, length of pivot bar between seatings,
= $T + S$,
L = Radius of primary 3-point support, and
= $R \cos 30°$.

The 18-point analysis sets the stage for many interesting combinations of support from 3 points to 6, 9, 12, 18, 36, and 72 supports.

Bonded Support. bonded supports may be as simple as bonded silicone rubber pads. *Caution must be used in choosing a bonding agent.* Epoxies have a high thermal coefficient of expansion and tend to shrink with

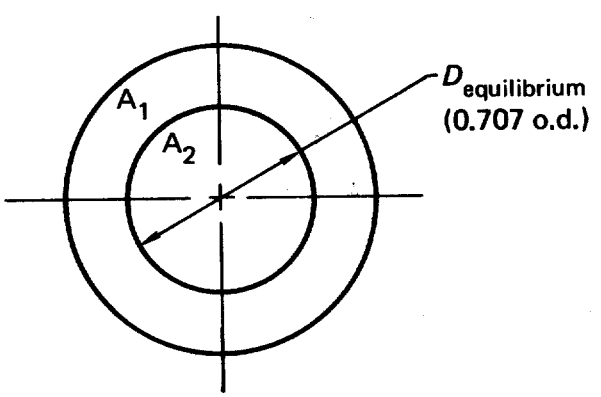

Fig. 30. Equilibrium diameter.

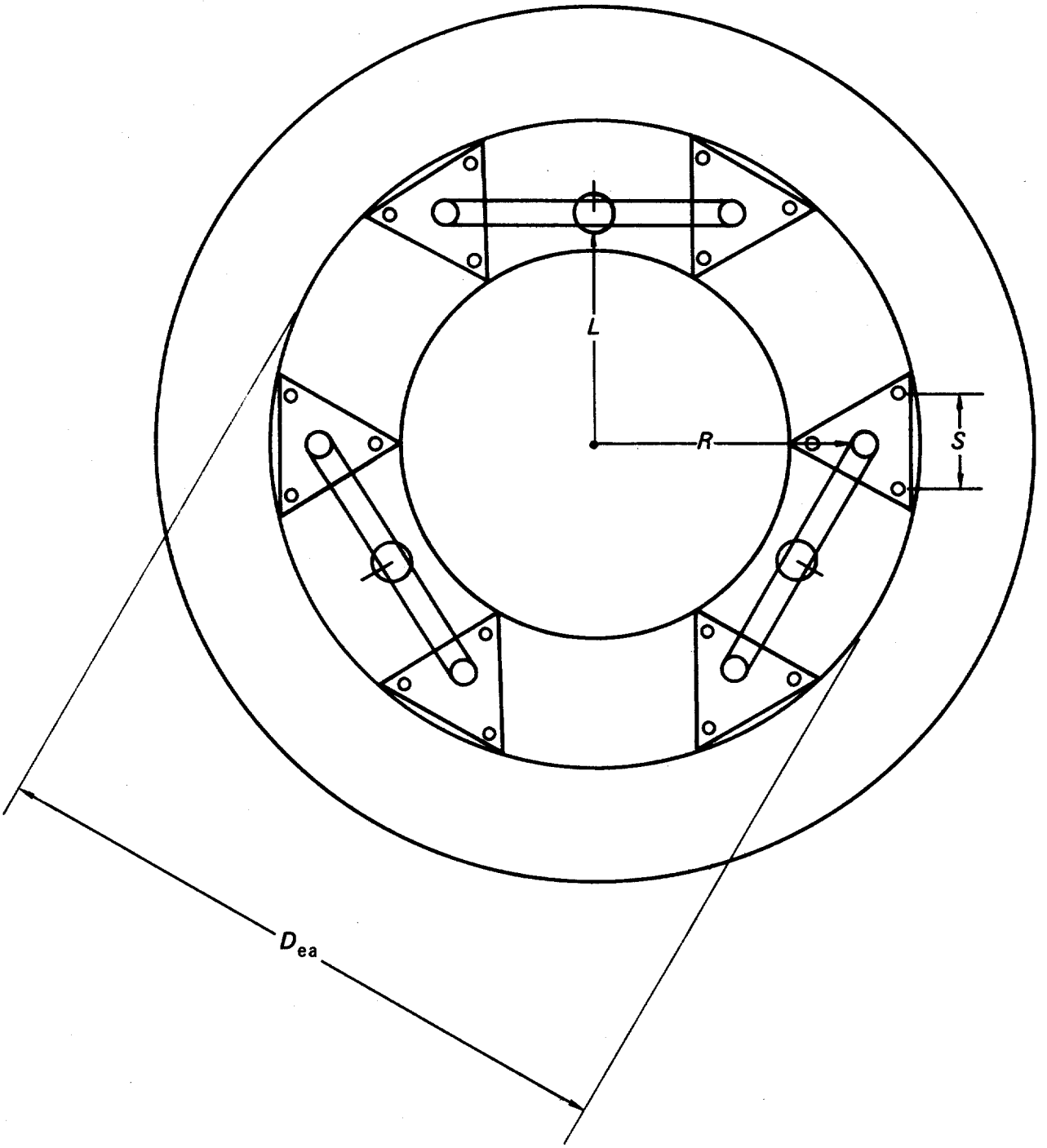

Fig. 31. Eighteen-point balanced mirror support.

age. This can cause a change in optical figure with time. A most suitable solution for high stability is to bond a "Tufftane" gasket to the glass with "Estane," both manufactured by BF Goodrich, Glouchester, Mass. The other side of the gasket is bonded to an Invar disk of the same diameter.

This combination has been found to remain strain-free for a period of years and does not "print through" onto the optical surface. Mirrors mounted this way can be used in any orientation, including upside-down.

The pad area is determined by the bond strength and shear area required to hold the glass.

The back support of the bezel must be stiff enough to hold the figure of the mirror when bonded. If Invar pads are used, the pads are simply bolted to the back support.

Disassembling a room-temperature vulcanizing (RTV) or "estane" bonded mount, involves only pulling a piano wire under the mirror, shearing the rubber layer and freeing the glass.

RTV Pads. The RTV rubber or RTV compounds work well for applications in the low to middle precision and stability range. The RTV usually used in conjunction with a silicone rubber pad acts as a bedding compound and flows into place while the mirror settles into a naturally strain-free condition during curing. Cleanliness and careful preparation are critical in the application of RTV to secure a suitable bond.

Another possibility is Dow Corning's #6-1104, a one-part RTV; it is expensive but it features very low outgassing.

Mechanical Linkages. The method of equilibrium diameters makes it possible to design "floating" mounts that maintain the balance of forces in most attitudes. Mechanical systems have been designed with counterweighted links that maintain balance and surface quality even in a vertical position. Such systems are expensive; they consist of innumerable parts and must face the difficulty of overcoming friction. (Inertia and friction are the most limiting aspects of linkage mounts.)

Hydraulic Mounts. A mounting concept capable of achieving surface quality in excess of $\lambda/50$ has been developed by using rolling diaphragms, counterweighted pistons, and manifolds (see Fig. 32). The system uses up to 72 support points and is designed as follows:

- The number of pistons is determined by the size of the mirror. A 2-m blank can take 72 supports, while a 1-m- diameter blank probably requires only 24 pads.
- The pads are spaced on the calculated equilibrium diameter.
- The mass of each mirror segment supported by a ring of pistons is calculated.
- The mass of the segment is divided by the number of pistons to determine the force on each piston in the segment.
- This is repeated for all segments.
- A force balance equation is written to determine the mass required for each piston to ensure the same total force is exerted on the water manifold by each segment.
- Counterweighted pistons are designed for each ring. The force balance will show that each ring requires a different mass. Lead is added to common piston designs to achieve desired mass levels.
- The strong back base has the diaphragms and hydraulic lines installed. The lines are over-filled and air bubbles removed.
- The pistons are set on the diaphragms.
- The mirror is set on the diaphragms and sufficient water bled from the system to allow the pistons to rise and fall without bottoming out.

The result is a fabrication and usage mount that is friction-free and capable of uniformly supporting glass. The design can even hold a mirror upside-down, if doughnut-shaped diaphragms are employed.

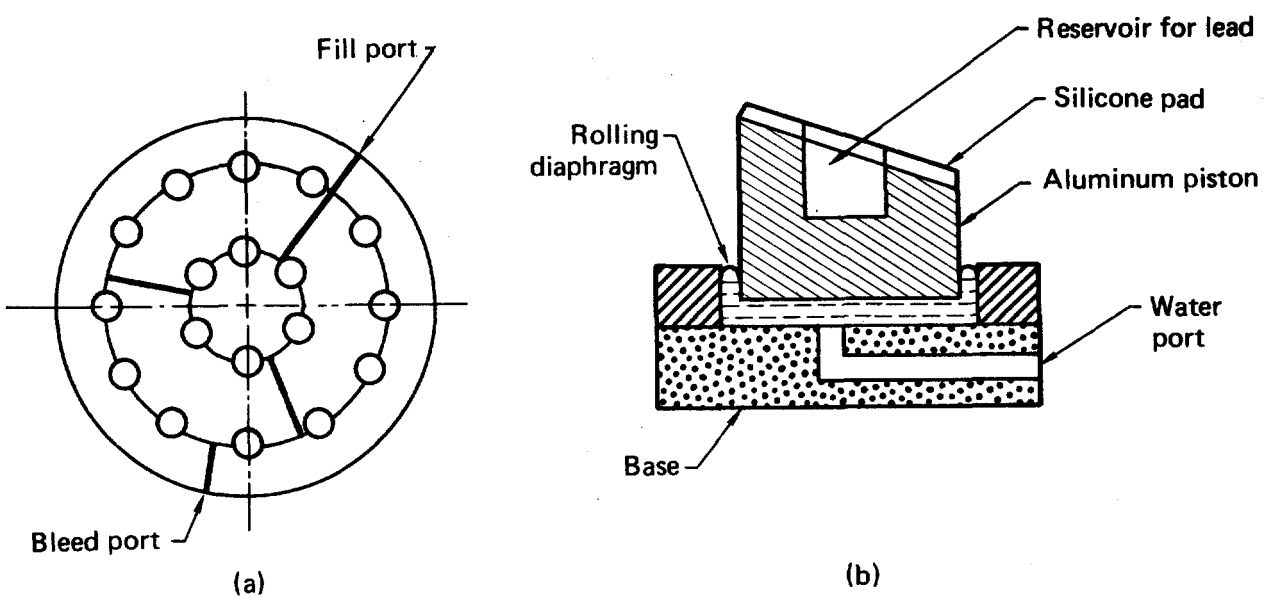

Fig. 32. Hydraulic mirror mount (a) top view showing hydraulic lines; and (b) detail of piston assembly.

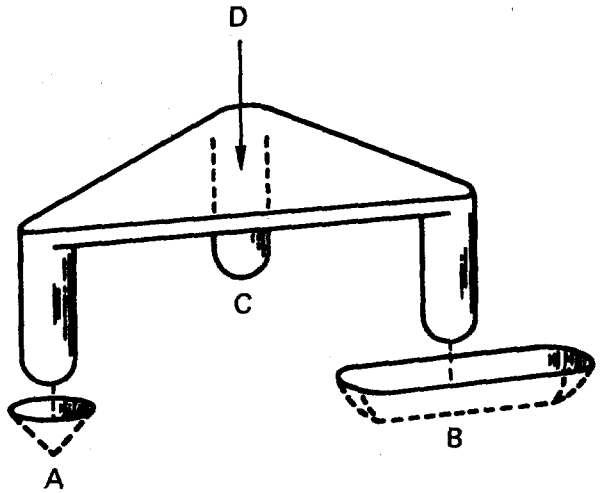

Fig. 33. Typical kinematic locating fixture. The three ball-ended legs of the stool rest in a conical hole at A, a V-groove (aligned with A) at B, and on a flat surface at C.

Kinematic Mounts[11]

In optical systems, as in precise mechanical devices, it is best to observe the basic principles of kinematics. A body in space has six degrees of freedom (or ways in which it may move): translation along the three rectangular coordinate axes and rotation about these three axes. A body is fully constrained when each of these possible movements is singly prevented from occurring. If a motion is inhibited by more than one mechanism, then the body is overconstrained and one of two conditions occurs; either all but one of the (multiple) constraints are ineffective, or the body is deformed by the multiple constraints.

The laboratory mount shown in Fig. 33 is a classical example of a kinematic mount. The object is to uniquely locate the upper piece with respect to the lower plate. At A, the ball-ended rod fits into a conical depression in the plate. This (in combination with gravity or a spring-like pressure at D) constrains the piece from any lateral translations. The V-groove at B eliminates two rotations, that about a vertical axis at A and that about the axis A-C. The contact between the ball-end and the plate at C eliminates the final rotation (about axis A-B). Note that there are no extra constraints and that there are no critical tolerances. The distances AB, BC, and CA can vary widely without introducing any binding effects. There is one unique position taken by the piece. It may be removed and replaced; it will always assume exactly the same position (see Fig. 33).

A perfectly kinematic system is frequently undesirable in practice and semikinematic methods are often used. These substitute small-area contacts for the point and line contacts of a pure kinematic mount. This is necessary for two reasons: materials are often not rigid enough to take point contacts without deformation, and the wear on a point contact soon reduces it to an area contact, in any event.

Thus, in the design of any instrument, whether optical or not, it is best to begin by defining the degrees of freedom to be allowed and the degrees of constraint to be imposed. These can be outlined first by geometrical points and axes and then reduced to practical pads, bearings, etc. This approach results in a thorough and clear understanding of the effects of manufacturing tolerances on the function of the device and often indicates relatively inexpensive and simple methods for maintaining a high order of precision.

INFORMAL GLOSSARY

ABERRATION

The degree an image passed through a lens differs from first-order equation predictions of where it should be and what it should look like.

ANGSTROM (Å)

Unit of wavelength of light: 1 Å = 0.0001 μm.

ASPECT RATIO

The ratio of the diameter of a lens or mirror to its thickness, e.g., 6:1 — mirror diameter is 6 times its thickness.

ASTIGMATISM

An aberration that occurs when the tangential and radial images do not coincide. The image of a point source is not a point but takes the form of two lines.

AXIS, OPTICAL

The line passing through both centers of curvature of the optical surfaces of a lens; the optical centerline for all the centers of a lens system.

BEAMSPLITTER

A (more-or-less) thin plate of glass that has one surface covered with a semireflective coating. It allows some fraction (usually one-half) of the incident light to pass through itself, while it reflects the remainder. Used to split one beam into two.

BEZEL

A housing surrounding a mirror element.

BREWSTER ANGLE

The angle of incidence for which a wave polarized parallel to the plane of incidence is wholly transmitted (i.e., with no reflection). An unpolarized wave incident at this angle is therefore resolved into a transmitted, partly-polarized, component and a reflected, completely-polarized, component. (Also called polarizing angle or a dielectric.)

CELL

A housing surrounding a lens element.

CLEAR APERTURE

A diameter, smaller than the overall diameter of an optical element, over which light is expected to pass. The remaining annulus between the clear aperture and outside diameter of the element is used for mounting. Optical quality and coating specifications are not applied beyond the clear aperture.

COMA

The variation of magnification with aperture. Rays passing through the edge portions of lens are focused at a different height on the focal plane from those passing through the center. The image resembles a comet or flare, rather than a point.

DIG

A surface defect with a low aspect ratio, often caused by stones, pits, or inclusions (see also "scratch").

DIG NUMBER

The actual diameter of defects allowed, specified in units of 0.01 mm. In the case of irregularly shaped digs, the diameter is taken as the average of the maximum length and minimum width.

DIMENSION

A numerical value expressed in appropriate units of measure and indicated on a drawing along with lines, symbols, and notes to define a geometrical characteristic of an object.

EDGING

The manufacturing operation during which the final periphery of a lens or mirror is formed. Usually machined on a diamond-cutting tool with the optic mounted using a vacuum check.

FLEXURE

A metal structural member designed to bend in a limited number of axes, while resisting bending in others.

FOCAL LENGTH

The distance from the principal surface of an element or system to the point where parallel rays of light impinging on it are focused. This can be for both a positive or negative element.

f/NUMBER

The ratio of the focal length of a lens to its clear aperture (not to the outside diameter); also called "speed."

FOCAL POINT (PRINCIPAL)

The point at which light rays (from an infinitely distant source) parallel to the optical axis are brought to a common focus.

FRINGE

A light or dark band on an interferogram. The spacing between two successive light or dark bands (light to light, dark to dark) represents optical path difference of one wavelength in the plane of interference of two wavefronts of light. See Appendix for interpretation of fringe distortion in relation to the properties of the piece under test. (This definition does not apply to the birefringence measurement.)

FRINGE SPACING

The space between fringes on an interferogram representing one wavelength of optical path difference. The interpretation of this spacing for an item under test depends on the type of interferometer used. (See Appendix for discussion of the interpretation of interferograms.)

GENERATING

A rough machining operation that forms glass to an approximate shape before polishing, usually with a diamond-cutting tool.

GRINDING

A refining operation following generation and preceeding polishing that uses loose abrasives in a water slurry and cast iron tools to work a generated optical element to a matte surface.

INDEX OF REFRACTION

The ratio of velocity of light in a vacuum divided by the velocity of light in the medium.

INTERFEROGRAM

A record of a pattern of interference of two wavefronts of light.

INTERFEROGRAM VISIBILITY (V)

A measure of the distinctness of fringes at a point P. It is defined as the ratio of the difference between the maximum (I_{max}) and minimum (I_{min}) intensities and the sum of the maximum and minimum intensities in the vicinity of P. Thus:

$$V = \frac{I_{max} - I_{min}}{I_{max} + I_{min}} .$$

INTERFEROMETER, DOUBLE-PASS TYPE

An interferometer whose active beam traverses the item once and is then reflected through the item a second time from an auxiliary reflector. The active beam hence traverses the item twice. Examples are Twyman-Green and Fizeau interferometers.

KINEMATIC MOUNT

A strain-free means of locating a mechanical device in a precise location repeatedly without realignment.

OSCILLATOR

A device that generates coherent optical energy, usually consisting of a laser medium placed within an optical cavity (mirror pair). Optical energy circulates within the cavity as long as the gain of the laser medium exceeds the losses at the mirrors.

PELLICLE

A thin membrane (usually plastic) stretched over a frame and used as a beamsplitter or a mirror. Because of its extreme thinness, astigmatism and ghost displacement are reduced to acceptable values.

POLARIZER

An optical device, either a crystal or multilayered sheet, that causes light impinging upon it to polarize after transmission or reflection. Such a device may also be used as a gate by selectively transmitting or reflecting light of an unwanted polarization.

POLISHING

A little-understood process in which abrasives in a slurry are rubbed over a ground glass or metal surface via a pitch-covered tool. The process not only levels sharp peaks but simultaneously causes thin layers of glass to melt and flow along the surface.

PRINT THROUGH

The impression of a back-mounting interface on mirror that is seen as an aberration on the primary optical surface.

REFLECTIVITY

The property of an optical surface which is that fraction of the incident radiant energy reflected. The remaining power is either absorbed or transmitted.

REFRACTION

Deflection of oblique incident light rays as they pass from a medium with one refractive index into a medium with a different refractive index.

SAG

Term is used two ways:

- The distance a curved optical surface deviates from flat over its aperture or diameter (*sagitta*).
- The amount an optical element droops under gravity loading.

SCRATCH

A surface defect with a high aspect ratio (i.e., ratio of length to width). (See also definition of dig.)

SCRATCH NUMBER

A number denoting the measured width of scratch in μm. Tolerances for scratch width are as follows (per note 2 on Frankford Arsenal drawing C7641866, Revision H of August 1974):

#10 scratch ± 1.0 μm
#20 scratch ± 2.0 μm
#40 scratch ± 4.0 μm
#60 scratch ± 6.0 μm
#80 scratch ± 8.0 μm

SLEEK

A polishing scratch without visible conchoidal fracturing of the edges. Unlike a scratch, which has broken, rough edges, a sleek has smooth unbroken edges.

STRIA

A localized imperfection in optical glass consisting of a distinct streak of transparent material with a slightly different refractive index from the body of glass.

SURFACE

The actual allowable error (distance between peaks and valleys on an optical surface — usually expressed in terms of a fraction of the wavelength of the incident light).

TRANSMISION BIREFRINGENCE

The optical path difference per unit of length between two orthogonally polarized waves formed on tranversing a strained media once.

WAVEFRONT

The optical distortion observed or photographed after reflection from or transmission through a tested optical component.

WAVEFRONT DISTORTION

The departure of a wavefront from a plane or spherical wave as it passes through an optical element (or is reflected from it).

WAVELENGTH 0.633 μm

The wavelength of a helium neon laser (red).

1.06 μm

Wavelength of the Neodymium yag laser (infrared).

REFERENCES AND NOTES

1. R. J. Roark, *Formulas for Stress and Strain* (McGraw-Hill, New York, NY, 1954), 3rd ed. (The most recent edition, the fifth, was published in 1975.)
2. *Schott Optical Glass* (Jena Glaswerk Schott & Gen., Mainz, Germany, FDR). (In U.S., contact Schott Optical Glass Co., Duryea, PA 18642.)
3. *Klinger Scientific Corp. Catalogue No. 408* (Klinger Scientific Corp., Jamaica, NY 11432, no date), p. 78.
4. Roark, *op. cit.*, p. 194.
5. *Ibid.*, p. 203.
6. *Ibid.*, p. 100.
7. S. Timoshenko and S. Woinowsky-Krieger, *Theory of Plates and Shells* (McGraw-Hill, New York, NY, 1959), 2nd ed., p. 220. The original notational scheme has been made consistent with the style of this report.
8. *Catalog No. 206 — Revised April 1967* (John Unertl Optical Co., Pittsburgh, PA 15214, 1967), p. 11.
9. Albert G. Ingalls, ed., *Amateur Telescope Making*, 3 vols. (Scientific American, Inc., New York, NY, 1965), 4th ed.
10. *Ibid.*, pp. 231-2.
11. Warren J. Smith, *Modern Optical Engineering* (McGraw-Hill, New York, NY, 1966), pp. 427-8. See also D. Chin, "Optical Mirror-Mount Design and Philosophy," *Applied Optics 3*, 7 (July 1964), p. 895.

APPENDIX — FUNDAMENTALS OF INTERFEROMETRY*

Interferogram Quality

An interferogram is a record of a pattern of interference produced by interfering light beams. It carries information about the wavefront distortion caused by the active beam's traversal or reflection from the item under test. As such, it must be readable, or the information content is lost.

To be readable, an interferogram must be large enough and have sufficient visibility to allow accurate measurement of the fringe spacing and distortion. All interferograms must be at least one inch in diameter and cover the full aperture of the test item. In the case of very small diameter items, a lens should be used to magnify the interferogram. The fringes must be sharp; i.e., the contrast of the image of the resultant photograph must be good. It is important to know where the fringes begin and end, so an image of the sharp edge of the item must be obtained. This can be done by careful placement of a lens to image the face of the item onto the camera film plane. This may be the same lens used to magnify the interferogram.

Aperture of Interferogram

The aperture of the interferogram needs to be defined so the area of interest over which the fringe distortions are measured is known (see Fig. 34).

The definition of the aperture depends on how much of the item under test will actually be used. If the distortion over this area is small and larger distortion appears only outside this region, the item may still be acceptable.

Wavefront Distortion Measurement

The optical quality of an item under test can be characterized in terms of its wavefront distortion, i.e., how much the item distorts a plane wave passing through it or reflected from it. The wavefront distortion can be measured by means of interferometry. A wavefront distortion interferogram is a record of interference between a wavefront which has passed through an item under test one or more times (or been reflected from) and a reference wavefront. Distortions in this fringe pattern are due to optical path differences which are caused by various inhomogeneities in refractive index, residual strains, striae and departures of the faces from a plane surface.

The conditions for the formation of light and dark fringes in terms of optical path differences remain the same for the Fizeau and the Twyman-Green interferometers. That is, in both interferometers, the optical-path difference between two successive light and dark fringes is one wavelength (see Figs. 34a and b). One fringe spacing is therefore equivalent to one wavelength (λ) of optical path difference (OPD). In both interferometers, a light fringe will appear if:

$$nh = m\lambda_0, \quad |m| = 0, 1, 2, \ldots$$

and a dark fringe if

$$nh = m\lambda_0, \quad |m| = 1/2, 3/2, 5/2, \ldots$$

where

h = the normal distance between the reflected wavefronts
n = the refractive index of the medium between the wavefronts
λ = wavelength of the interferometer light source

The refractive index inhomogeneities, residual strains and departures of the faces from a plane surface will contribute to the OPD one or more times depending on whether a single pass (Mach-Zehnder, transmission only) or double pass (Twyman-Green and Fizeau, transmission and reflection) interferometer is used.

*A. T. Glassman, "Appendix B: Interferogram Preparation and Interpretation of Tests," in *Inspection Procedure for Mirrors and Beamsplitters*, Mechanical Engineering Dept. Specification, Lawrence Livermore Laboratory, Livermore, CA, MEL 75-001277 (October 7, 1975). Minor editorial changes have been made in the text printed here and the illustrations have been renumbered and redrawn to conform with the style of this report.

Hence, a wavefront distortion of one fringe on a Mach-Zehnder interferogram implies an OPD of 1λ, while one fringe distortion on a Twyman-Green or Fizeau interferogram implies $1/2\lambda$ OPD in the item under test (see Fig. 34c).

It should be noted that in the wavefront distortion tests, the surface quality of the item has an effect in the results as does the internal quality of the material under test; whereas in the surface flatness test, only the surface effects are being measured. Thus it is possible to separate the surface effects from the internal effects in the wavefront distortion test, if both measurements are made.

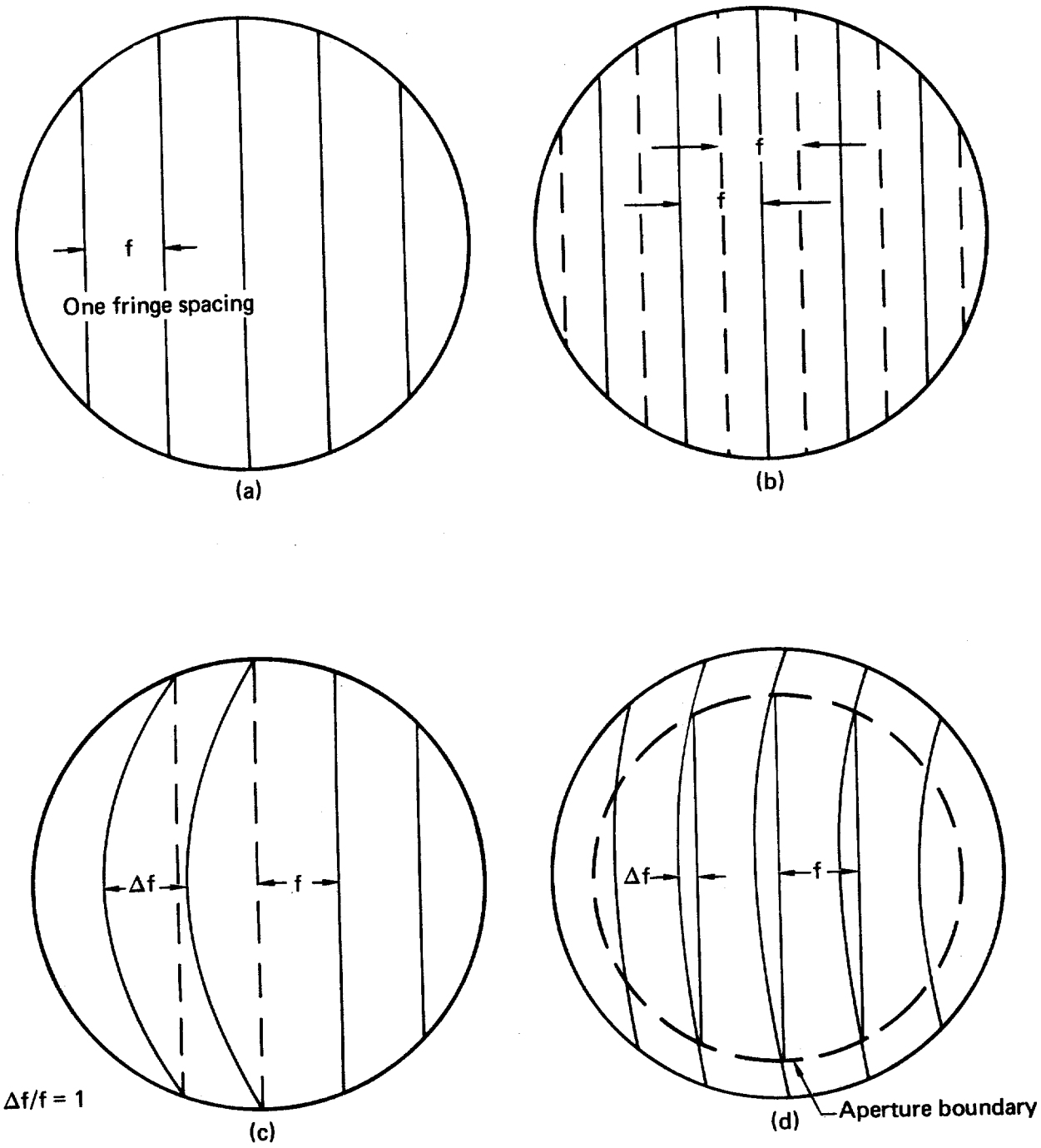

Fig. 34. Definition of fringe spacing and fringe distortion (see discussion in text).

Transmission (Strain) Birefringence Measurement

The birefringence per unit length can be calculated from rotation of the compensator measured in the test procedure for transmission birefringence. Birefringence is usually reported in units of nanometres per centimetre of path length (nm/cm) and is caused by residual strains in the media to be tested.

When a polarized beam (P) propagates through a glass of thickness t and the glass has residual strain, where x and y are the directions of principal strains at the point under consideration, the light vector splits and two polarized beams are propagated in planes x and y, as shown on Fig. 35.

If the strain intensity along x and y is E_x and E_y and the speed of the light vibrating in these directions is V_x and V_y, respectively, the time necessary to cross the plate for each of them will be t/v, and the relative retardation between these two beams, δ, is

$$\delta = \left(\frac{t}{V_x} - \frac{t}{V_y}\right) = t(n_x - n_y).$$

Brewster's Law established that the relative change in index of refraction is proportional to the difference of principal strains, or

$$(n_x - n_y) = K(E_x - E_y)$$

The constant K is called the "strain-optical coefficient" and characterizes a physical property of the material. It is a dimensionless constant usually established through experiment. Combining the expressions above, we have:

$$\delta = tK(E_x - E_y)$$

Due to the relative retardation δ_1, the two waves are no longer simultaneous when emerging from the glass. The analyzer A will transmit only one component of each of these waves (that which is parallel to A) as shown in Fig. 35. These waves will interfere and the resulting light intensity will be a function of:

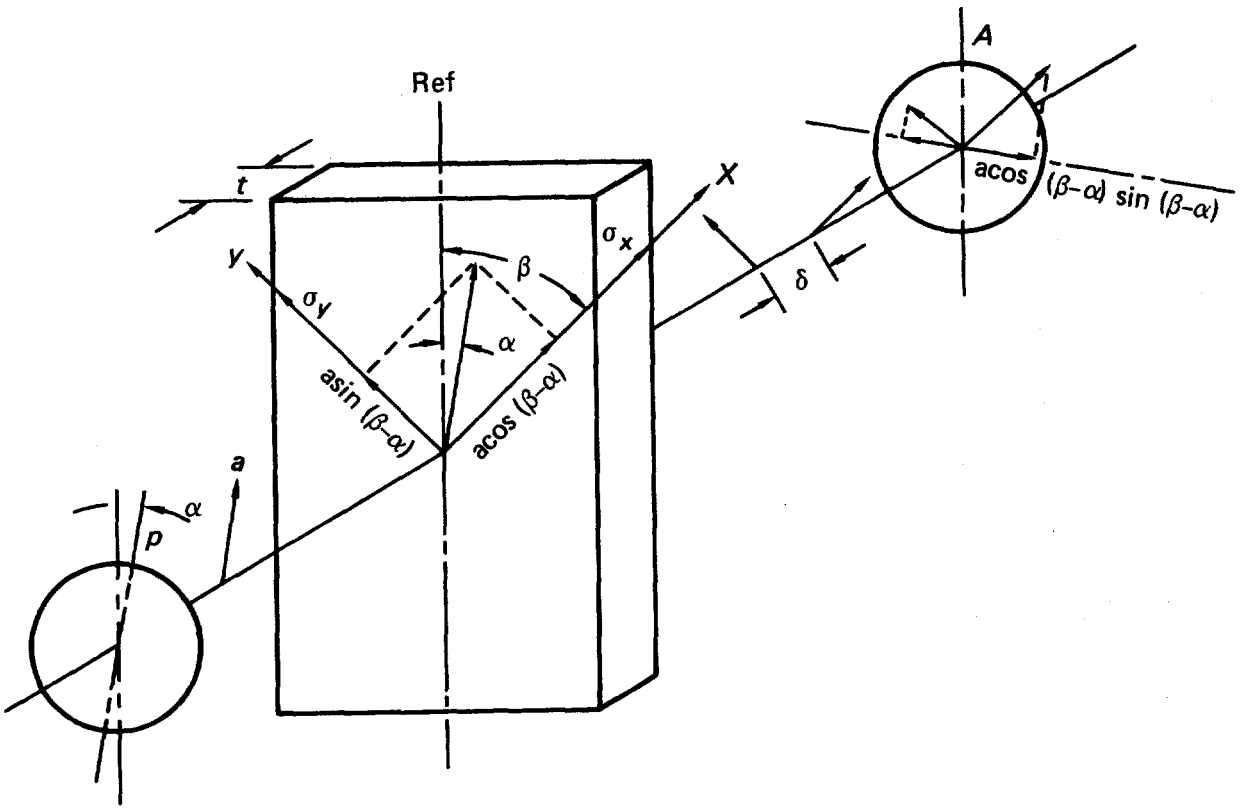

Fig. 35. Propagation of two polarized beams in plane polariscope.

a. the retardation δ
b. the angle between the analyzer and direction of principal stresses $(\beta - \alpha)$.

In the case of plane polariscope, the intensity of light emerging will be:

$$I = a^2 \sin^2 2(\beta - \alpha) \sin^2 \frac{\pi\delta}{\lambda}$$

where I = the intensity of light emerging
a = the amplitude of the beam
λ = the wavelength of the source.

In a plane polariscope, directions of the principal stresses are measured. The light intensity becomes zero when $(\beta - \alpha) = 0$ (see Fig. 35) or when the crossed polarizer-analyzer is parallel to the direction of principal stresses. The directions of principal stresses can be measured at every point.

Adding quarter-wave plates in the path of light propagation, transforms the plane polariscope into a "circular polariscope." The emerging light intensity is now independent of the direction of principal stresses (Fig. 36):

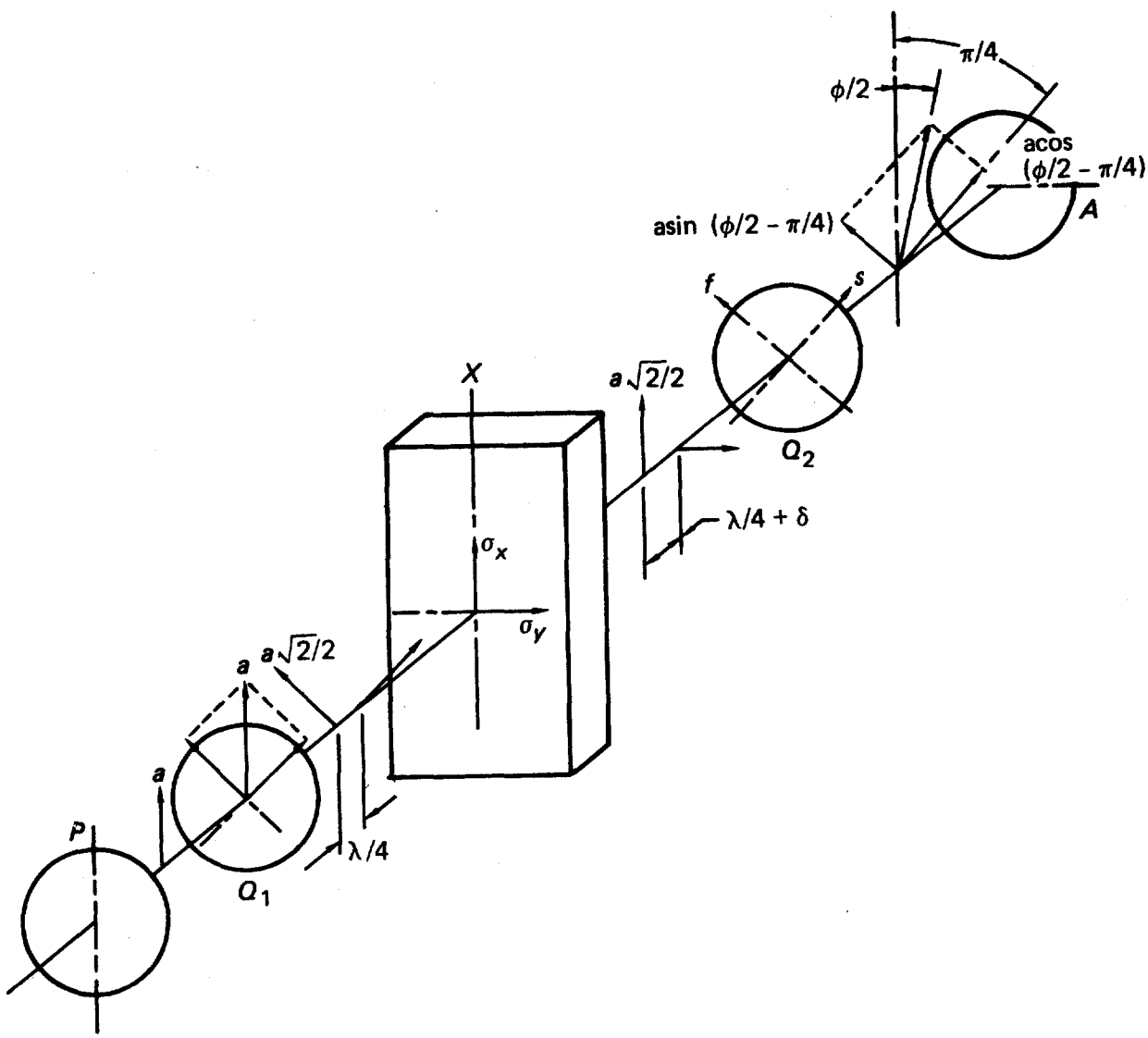

Fig. 36. Beam propagation in circular polariscope.

$$I = a^2 \sin^2 \frac{\pi\delta}{\lambda} .$$

In the circular polariscope, the light intensity becomes zero when:

$\delta = 0$
$\delta = 1$
$\delta = 2$
or in general $\delta = \bar{N}$

where $\bar{N}$ = 1, 2, 3, etc.

This number $\bar{N}$ is also called fringe order and basically it describes the size of δ.

In the determination of the transmission (strain) birefringence, as described previously, the rotation of the compensator is directly measured. The birefringence is calculated from this rotation angle by considering its relation to the δ, linear phase difference or retardation described above. The compensator is used to cancel out or "compensate" the δ or retardation linear phase difference, or more correctly, the angular phase difference α:

$$\alpha = \frac{2\pi\delta}{\lambda} .$$

Therefore, if a rotation angle θ is needed, the intensity after the compensator can be written as:

$$I = a^2 \sin^2 (\theta \pm \frac{\pi\delta}{\lambda})$$

or

$$I = a^2 \sin^2 (\theta \pm \frac{\alpha}{2}) .$$

Since, for extinction, the argument of $\sin^2$ must be zero:

$$\theta = \frac{\alpha}{2}$$

$$\alpha = 2\theta .$$

Knowing the relation between θ and α:

$$\alpha = \frac{2\pi(\delta)}{\lambda} = \frac{2\pi}{\lambda} (n_1 - n_2) t = \frac{2\pi\Delta nt}{\lambda}$$

where α = angular phase difference
λ = wavelength = 546 nm for Hg arc; 633 nm for He-Ne laser
δ = linear phase difference
n_1 = refractive index in the direction of one principal stress
n_2 = refractive index in direction of second principal stress
t = test item thickness, cm

The birefringence (ΔN) can them be calculated as:

$$\Delta N = \frac{\alpha\lambda}{2\pi t}$$

a) If α is in units of degrees and λ is 546 nm,

$$\Delta N = \frac{\alpha\lambda}{360t}$$

$$\Delta N = \alpha \times \frac{546 \text{ nm}}{360 \text{ t}} .$$

Substituting for α,

$$\Delta N = \frac{2\theta \times 546 \text{ nm}}{360\, t}$$

b) If θ is in units of 100 div = 180°,

$$\Delta N = \frac{2\theta\lambda}{200\, t} = \frac{\alpha \times 546 \text{ nm}}{200\, t}$$

$$\Delta N = \frac{\text{nm}}{\text{cm}} = \frac{\alpha \times 2.73}{t}$$

Parallelism Measurement

The parallelism of the beamsplitter faces can be calculated from the interferograms. The thickness variation in the beamsplitter can be thought of as though the beamsplitter were a wedge and the parallelism angle were the wedge angle. Therefore, what is needed is Δt, the thickness difference, divided by the distance over which Δt occurs or the length of the beamsplitter in the direction perpendicular to the fringes.

$$m\lambda = 2n\Delta t$$

$$\Delta t = \frac{m\lambda}{2n}$$

where Δt = the thickness variation
m = the number of fringes
λ = the wavelength
n = the refractive index of the glass

$$\alpha_{rad} = \frac{\Delta t}{\ell}$$

where α_{rad} = the wedge angle in radians
ℓ = the length along the beamsplitter perpendicular to the fringes over which the measurement is made

$$\alpha_{sec} = \alpha_{rad} \frac{57.296 \text{ deg}}{\text{rad}} \times \frac{3.600 \times 10^3}{\text{deg}}$$