222847

UCRL-JC-115215
PREPRINT

Inspection of the Diamond-Turned Surfaces Used for Mounting an Array of Eight X-ray Reflection Gratings

Richard C. Montesanti
Lawrence Livermore National Laboratory
Livermore, California

This paper was prepared for submittal to the
American Society for Precision Engineering Conference
Seattle, Washington, November 7-12, 1993

November 1993

Lawrence Livermore National Laboratory

This is a preprint of a paper intended for publication in a journal or proceedings. Since changes may be made before publication, this preprint is made available with the understanding that it will not be cited or reproduced without the permission of the author.

DISCLAIMER

This document was prepared as an account of work sponsored by an agency of the United States Government. Neither the United States Government nor the University of California nor any of their employees, makes any warranty, express or implied, or assumes any legal liability or responsibility for the accuracy, completeness, or usefulness of any information, apparatus, product, or process disclosed, or represents that its use would not infringe privately owned rights. Reference herein to any specific commercial products, process, or service by trade name, trademark, manufacturer, or otherwise, does not necessarily constitute or imply its endorsement, recommendation, or favoring by the United States Government or the University of California. The views and opinions of authors expressed herein do not necessarily state or reflect those of the United States Government or the University of California, and shall not be used for advertising or product endorsement purposes.

Inspection of the Diamond-Turned Surfaces Used for Mounting an Array of Eight X-ray Reflection Gratings

Richard C. Montesanti
Lawrence Livermore National Laboratory (LLNL)
Livermore, CA 94550

Key Words: diamond-turning machine, dimensional metrology, X-ray Multi-Mirror project (XMM), snap-together optics, Precision Engineering Research Lathe (PERL)

Introduction

This paper describes the use of a T-base diamond-turning machine as a measuring machine for inspecting the positional accuracy of the diamond-turned surfaces of four attachment rails—parts that resemble precision step gauges. The attachment rails provide the precision mounting surfaces for a prototype array of eight X-ray reflection gratings for the European Space Agency's (ESA) X-ray Multi-Mirror project (XMM). Each rail is 4.5" long with a cross-section of less than 0.1 in^2, and has eight protruding bosses spaced approximately 0.5" apart (Figure 1). A diamond-turned feature on each boss provides a mounting surface for one of the four corners of a grating. These surfaces are 0.018" high by 0.1" wide, and have a 12" cylindrical radius with an axis parallel to the boss protrusion (Figure 2). Together, the four rails provide eight sets of four co-planar points for mounting the gratings (Figure 3). Note that the gratings are not parallel to each other; they sweep through a 12 mrad angle from the first to eighth grating. To accommodate this fanned array, the normal directions (denoted by arrows in Figure 1) of the mounting surfaces on the bosses, at the rail centerline, also sweep through a 12 mrad angle from the first to eighth boss.

The optical performance requirements of the grating array required that the mounting points locate the corners of the gratings within ± 15 µin of their designed positions. By virtue of the accurate location of the mounting surfaces with respect to each other, the rails allow the gratings to be arrayed with the spacing and orientation accuracy necessary in a snap-together optics fashion; adjustments after installing the gratings are not required.

The base material of the rails is Ni-Fe Alloy 42 (invar), which has the same coefficient of thermal expansion as the gratings and the support structure (2.4 µin/in-°F). The bosses were plated with 0.005" of copper to allow single-point diamond-turning of the grating mounting surfaces with minimal tool wear[a].

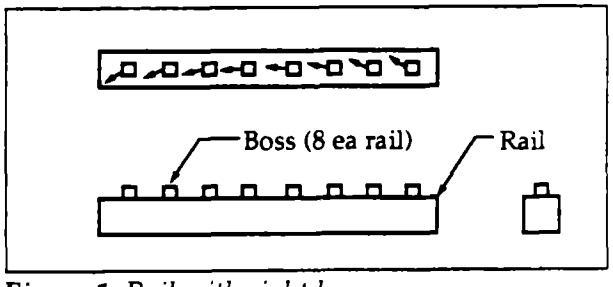

Figure 1. Rail with eight bosses.

[a] See companion paper: *Fabrication of the Attachment Rails Used for Mounting an Array of Eight X-ray Reflection Gratings*, R.C. Montesanti, ASPE 1993 Annual Meeting Proceedings.

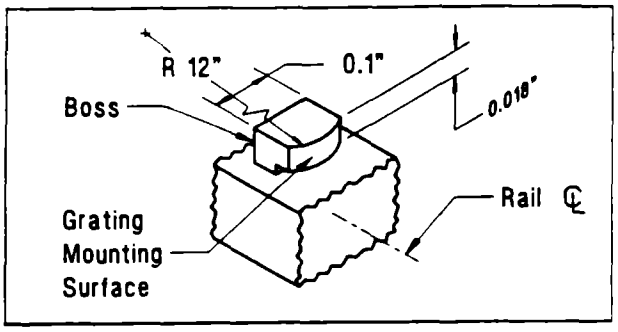

Figure 2. Boss detail.

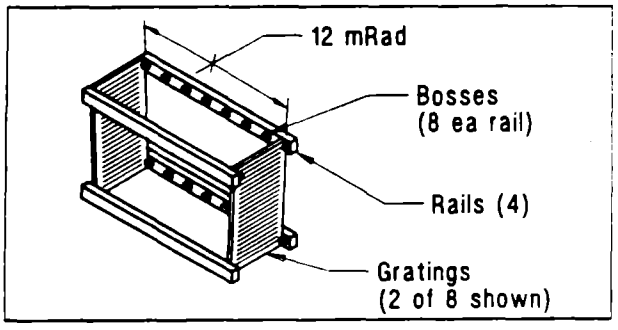

Figure 3. Gratings mounted to rails.

Inspection Set-up

The geometry of the eight cylindrical grating mounting surfaces on a rail was suitable for using a 2-axis measuring machine for inspecting the positional accuracy and form of the diamond-turned grating mounting surfaces. An error budget generated for the fabrication and inspection of the boss locations indicated that the error in the inspection process had to be less than ± 6.2 µin. To achieve this precision, the Precision Engineering Research Lathe (PERL)—a 2-axis T-base diamond turning machine at LLNL—was used as a measuring machine. Figures 4 and 5 show a schematic of the set-up. A rail was mounted to the cross-slide so that the arcs along the grating mounting surfaces lay in the plane of motion of the PERL's cross-slide and spindle-slide (x- and z-axis slides, respectively). An air-bearing Linear Variable Differential Transformer (LVDT) probe was mounted to the z-axis slide so that it could measure displacements along the x-axis. The LVDT amplifier was set for a 1 µin resolution, and its output was sent to a strip-chart recorder. The two slides were moved under computer control so that the LVDT probe tip traced along the designed arc of the grating mounting surface of each boss, one after the other, with a path error of less than 1 µin. A location error of a boss with respect to the other bosses on the rail, or an error in its form would cause a recorded change in the deflection of the probe tip. If the 8 bosses on a rail had no location errors and were perfectly formed, then the LVDT probe deflections recorded on the strip-chart would be as shown in Figure 6. The rail passed inspection if the traces for all 8 bosses fell within the ± 13 µin tolerance band shown[b].

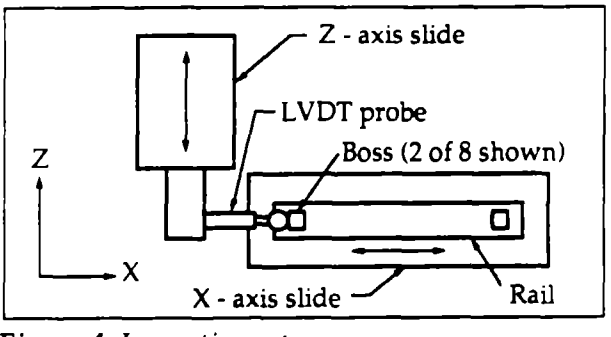

Figure 4. Inspection set-up.

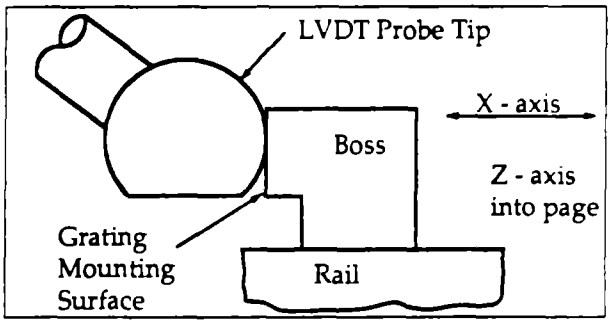

Figure 5. Detail of probe/boss contact.

[b] Repeated measurements on one of the rails showed the measurement repeatability for the set-up to be within ± 2 µin. The ± 13 µin tolerance band ensured that the boss locations would be within the required ± 15 µin.

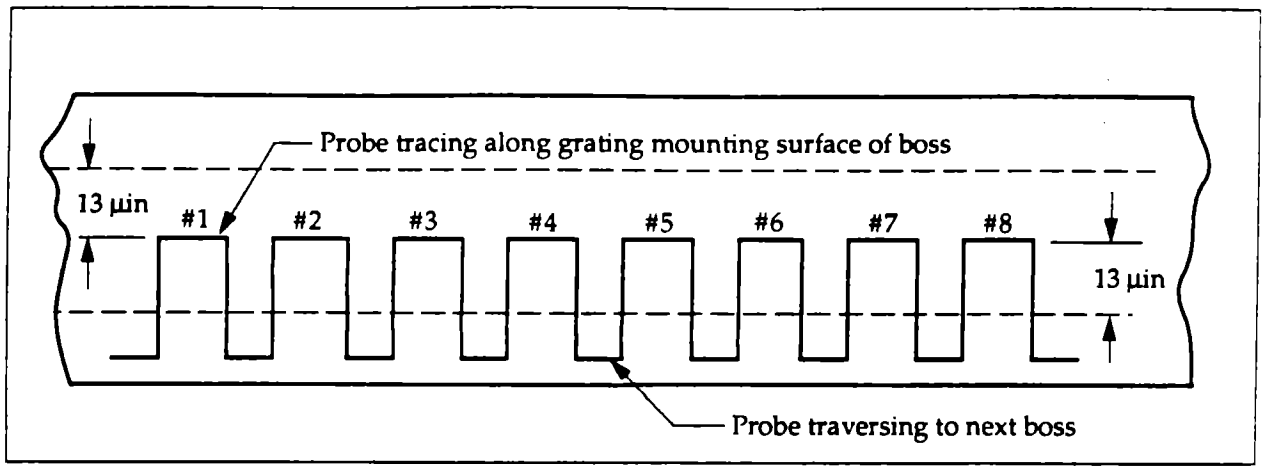

Figure 6. Strip-chart showing LVDT probe deflections for a perfect part.

Calibrating the PERL Machine

The PERL machine uses laser interferometers operating in ambient air for displacement measurements of the x- and z-axis slides. The wavelength of the light used varies with changes in the temperature, relative humidity, and pressure of the air. An enclosure surrounding the PERL machine maintained the temperature of the air to within ± 0.1 °F of a set-point temperature (nominally 68.0 °F), and the relative humidity of the air remained constant to within ± 10%. The combined measurement errors due to those two factors were less than ± 1 µin. Although the air pressure remained constant (to within 0.05 in-Hg) during the measurement of a rail, its absolute value changed significantly from rail to rail. Wavelength compensation was entered into the PERL machine's software to account for those changes.

The displacement measurement system was calibrated against a set of certified Tungsten-Carbide[c] Grade II gauge blocks. Since the length standard and the parts to be measured have a similar coefficient of thermal expansion, a small (≈ 1 °F) error in the absolute temperature at the time of calibration was not critical. Because the grating array performance is unaffected by a small (≈ 10 µin/in) consistent scaling error in all four rails, the calculated uncertainty of ± 3 µin/in in the absolute length calibration was acceptable. To insure consistent measurement results between all four rails, the measured boss spacings were scaled to the same reference temperature of 68.0 °F.

A static drift test was performed to ensure that the PERL machine's laser interferometers, positioning servos, and thermal control were adequate for achieving a positioning accuracy on the order of 5 µin. Both the x- and z-axis slides were activated and commanded to maintain a static position. Since the positioning accuracy of the x-axis slide was critical for measuring the location of the grating mounting surfaces, an LVDT was set up to measure displacements in the x-direction of the x-axis slide relative to the z-axis slide. Drift of the x-axis slide over 30 minutes was less than 2 µin, which was acceptable.

[c] Tungsten-Carbide has a coefficient of thermal expansion that is almost identical to that of the Ni-Fe Alloy 42 (2.4 µin/in-°F).

Inspection results

Table 1 shows the measured location errors of the grating mounting surfaces on the four rails. The errors for all four rails were within ± 11 µin. Repeated measurements on one of the rails indicated that the inspection process was repeatable to within ± 2.0 µin. Therefore, all four rails met the required ± 15 µin tolerance for the parts. The error span for the first four rails indicated that a progressive degradation in the diamond-turning process was occurring. We suspected that the diamond tool was beginning to exhibit appreciable wear, so it was replaced with a new tool before machining the fourth rail. The ± 3.1 µin span on the boss locations for the fourth rail verified those suspicions. The location of the grating mounting surfaces on one of the rails was measured at two different heights above the long axis of the rail (in-feed direction of the fly-cutter). This comparison showed that these surfaces were parallel to each other to within 5 µin in that direction, which was acceptable. Because the nominal embedment of the bosses into the grating is 20 µin for the designed 1 lb clamping load[d], observed form deviations from a smooth arc, with amplitudes of ≈ 2 µin or less, would not adversely affect the mounted locations of the gratings.

At the time of this writing, preliminary optical tests using a Fizeau interferometer and a precision rotary table indicated that the as-mounted orientations of the eight gratings mounted against the bosses of the four rails (EOBB array) were better than what was predicted for the case where the corners of each grating had a ± 15 µin location error. The final proof of the accuracy of the boss locations will occur in October 1993, when the X-ray performance of the EOBB array will be tested in Europe.

[d] The grating surface is actually a replica — 500Å of gold on a 40 - 60 µm thick layer of oven-cured epoxy— of a master grating.

Conclusion

A T-base diamond-turning machine was successfully used as a measuring machine for inspecting the positional accuracy of the diamond-turned surfaces of the four attachment rails used for mounting eight X-ray reflection gratings into an array. The inspection process revealed that the eight grating mounting surfaces on each rail were machined to a positional accuracy of ± 11 µin or better, meeting the required ± 15 µin tolerance for the parts.

Acknowledgments

Dick Grayson of LLNL calibrated the PERL machine and performed the rail inspections with it. Charlie Giles of LLNL wrote and debugged the computer programs used to inspect the rails with the PERL machine. Special appreciation goes to Pete Davis, Todd Decker, and Bob Donaldson, all of LLNL.

	Boss 1	Boss 2	Boss 3	Boss 4	Boss 5	Boss 6	Boss 7	Boss 8	Span
Rail 1	+ 4.0	+ 4.8	+ 1.2	- 2.5	- 2.7	- 4.8	- 1.0	- 1.2	± 4.8
Rail 2	- 4.9	- 7.8	- 7.1	- 3.0	+ 5.7	+ 7.8	+ 1.9	- 2.9	± 7.8
Rail 3	- 11.0	- 6.7	- 3.9	+ 4.9	+ 11.0	- 2.5	- 2.6	- 1.3	± 11.0
Rail 4	- 0.6	+ 3.1	- 0.2	- 1.5	- 1.7	- 1.0	+ 0.7	- 3.1	± 3.1

Table 1. *Location errors of the grating mounting surfaces (µin).*

This work was performed under the auspices of the U.S. Department of Energy by Lawrence Livermore National Laboratory under contract No. W-7405-Eng-48.