Chapter

10

Seismic Design of Concrete Shielding Block Assemblies

FOREWORD: The Facility Manager's Perspective

Donald G. Eagling

Massive concrete shielding blocks pose a very special problem in earthquake safety. In 1975, full-sized shielding blocks were subjected to realistic earthquake motions for the first time utilizing the University of California's 90-ton shaking table at the Earthquake Engineering Research Center in Richmond, California. Until then, only theoretical studies were available for reference, and these primarily concerned rocking action and overturning. In instances in which earthquakes were actually taken into consideration, design was usually predicated on the aspect ratio (height-to-width) of blocks. The idea was to prevent toppling. Little consideration was given to sliding; thus, the proximity of heavy shielding blocks to building columns, experimental equipment, or habitable shelters was usually ignored. Experiments on the shaking table clearly demonstrated the sliding hazard. After static friction between the block and the concrete surface of the shaking table was overcome, the table moved almost freely beneath the block. Imagine what would happen if a huge stack of massive concrete shielding blocks impacted a vital building column, located in close proximity, with an acceleration of 0.7g. Nominal anchor bolts in the column base plate would provide little shear resistance against this enormous force.

The simplest and most economical way of avoiding this hazard is to locate shielding blocks far enough away from building columns and occupied areas so that contact is not possible during an earthquake. If a building column must penetrate the shielding stack, the problem is much more difficult. One possibility is to fill the space between the shielding and the column with nonrigid, frangible shielding materials that minimize the impact on the column in the event of differential motion. This expedient is not recommended as a permanent solution, but it could be used to temporarily reduce the risk in an existing installation.

A permanent solution involves anchoring the shielding blocks against movement and designing the stack of blocks to incorporate a predictable lateral-force-resisting system. The important thing to recognize in this approach is that almost all of the inertial energy induced by earthquake shaking must be resisted directly by the lateral-force-resisting-system. Buildings generally have enumerable structural members and joints that, along with nonstructural architectural appendages, flex and deform both elastically and inelastically to absorb large amounts of dynamic energy and thus reduce the effective forces on the lateral-force-resisting system. Unlike a building, little energy is absorbed in deforming very rigid blocks, and

little molecular damping occurs within individual blocks. The redundancy available in most building framing systems is not available in the individual block. Consequently, for shielding blocks, the lateral-force-restraining system should be designed for a static lateral force coefficient close to the effective peak ground acceleration. If the stack is quite high with respect to its depth, consideration should be given to amplification of the induced base motion with height.

It is important that designers analyze shielding restraints as a complete lateral-force-resisting system, including the interaction among the ground, the foundation, and the shielding. A set of calculations covering the complete system, including a narrative description of how the system is expected to function, should be made. The best way to ensure this happens is to require a design review by independent experienced earthquake engineers. There is small likelihood that the persons responsible for designing the experimental apparatus per se can give realistic consideration to seismic restraints; therefore, it is vital that responsibility for the analysis and design is delegated to a structural engineer.

Auxiliary support equipment, important experimental apparata, and sensitive research instrumentation may be attached to shielding assemblies. Often, state-of-the-art experimental apparata are designed and fabricated with no consideration for forces induced by earthquakes. When it is necessary to protect the internals, it is usually feasible to design the equipment base to dissipate some or most of the seismic motion at the base so that the sensitive apparata are not subjected to the full ground motion. This can be accomplished by providing seismic isolation or shock absorbers between the shielding and the equipment so that the apparata experience less acceleration than the shielding. It is essential, however, that there is adequate horizontal clearance between the isolated equipment and the shielding to handle the differential movement without pounding.

The chapter that follows deals primarily with the restraint of shielding block assemblies. The methods described have been utilized in the field without the benefit of a full-scale test by the *master inspector*—the real earthquake. The 1989 Loma Prieta, California earthquake produced only 0.12g at the Lawrence Berkeley Laboratory and .26g at the Stanford Linear Accelerator Center in Palo Alto, California. However, emphasis is placed on design rather than analysis with the objective that possible failure be limited to inelastic behavior of the lateral-force-resisting system rather than collapse, even if the intensity of the earthquake greatly exceeds the design motion.

Chapter

10a

Planning and Design Methodologies for Blocks

Donald G. Eagling
John J. Earle
Daniel Shapiro

Introduction

When operating particle accelerators, it is necessary to shield personnel as well as the surrounding environment from ionizing radiation. For this purpose, concrete blocks are often used as modular shielding elements. Concrete blocks are massive and may slide, rock, or topple in earthquakes. They must be restrained to provide a safe seismic environment for people and prevent damage to adjacent structures and experimental equipment. An official code for designing concrete shielding block assemblies does not exist at present.

Little is known from actual earthquakes about how massive items similar to shielding blocks behave, particularly when restrained. However, experiments with shielding blocks on the 90-ton shaking table at the University of California Berkeley's Earthquake Engineering Research Center have been carried out to investigate both rocking and sliding motions. This research has been documented in two references; *Sliding Response of Rigid Bodies to Earthquake Motions* (Ref. 1) *and Rocking and Overturning Response of Rigid Bodies to Earthquake Motion* (Ref. 2).

This chapter provides recommendations for the design of shielding blocks for earthquake resistance based on the referenced research and design applications at the Lawrence Berkeley Laboratory. These recommendations are discussed under the following headings:

- Earthquake effects on shielding blocks
- Basic configurations of shielding block assemblies
- Building code considerations
- Seismic design criteria for shielding blocks
- Applications to individual blocks
- Anchorage design
- Prevention of dislocation and overturning
- Design of shielding walls and tunnels for earthquakes
- Design of shielding caves for earthquakes
- Summary of recommended earthquake design for shielding blocks

Earthquake Effects on Shielding Blocks

Because of the massive character of blocks, resistance to earthquake shaking involves different considerations than those that apply to typical buildings. Earthquakes may induce responses in blocks or block structures that can cause the following hazardous conditions (Fig. 10a-1):

- Sliding or lateral movement
- Rocking, wobbling, or random movement
- Overturning
- Shifting and misalignment
- Collapse of the block structure or roof blocks
- Collision with adjacent internal equipment, building elements, or other obstacles.

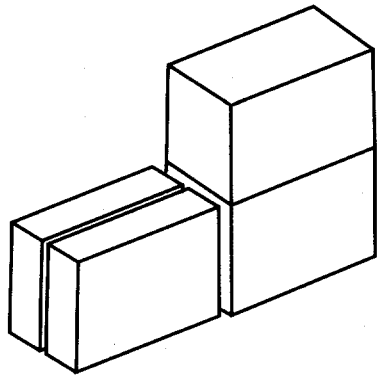

Block Stacks

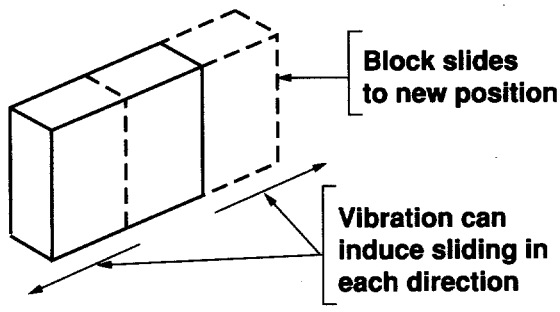

Sliding

Rocking motion or wobble

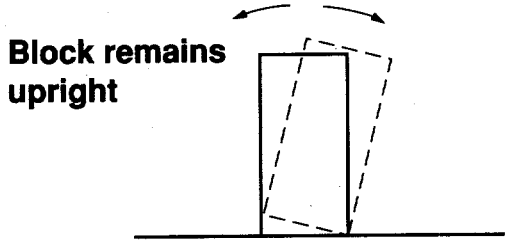

Rocking

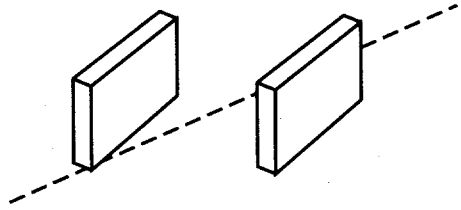

Shifting-misalignment

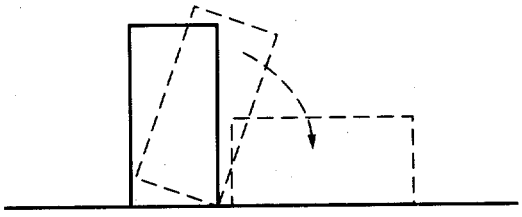

Overturning

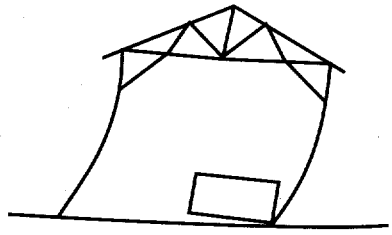

Sliding collision

Fig. 10a-1. Concrete block response.

Basic Configurations of Shielding Block Assemblies

Thickness, density, and height requirements for shielding vary. Individual block sizes are usually limited by the capacity of handling equipment available to move them, such as overhead cranes and forklifts. It is necessary to accommodate blocks to varying requirements by stacking them or placing units side by side. Thus, shielded spaces are formed by assembling individual blocks in some required pattern. Blocks may be arranged in many different configurations, depending on the degree of shielding required and the physical area available.

Concrete blocks are durable, heavy, bulky, and very expensive. This makes re-use attractive, but storage costly. Thus, blocks constructed for one project are usually adapted to subsequent layouts not always compatible with their sizes or configurations.

The most common block configurations are (Fig. 10a-2):

- *Individual blocks* in line with or at right angles to one another and without a ceiling cover
- *Tunnels* with two parallel lines of wall blocks with or without roof blocks
- *Caves,* which form enclosures with a roof and four mutually perpendicular walls similar to a box.

Usually, blocks are supported on a reinforced concrete slab on grade or a heavy foundation structure. Such heavy loads should not be placed directly on the ground or on unstable ground or potential landslide areas. Whether loads are supported by a slab or structure, the bearing capacity of the underlying materials and/or structure must be verified as well as the ability of the slab to transmit shear into the ground.

Building Code Considerations

The seismic provisions of model building codes such as the *Uniform Building Code* (UBC) (Ref. 3) have been developed primarily for buildings that have seismic response

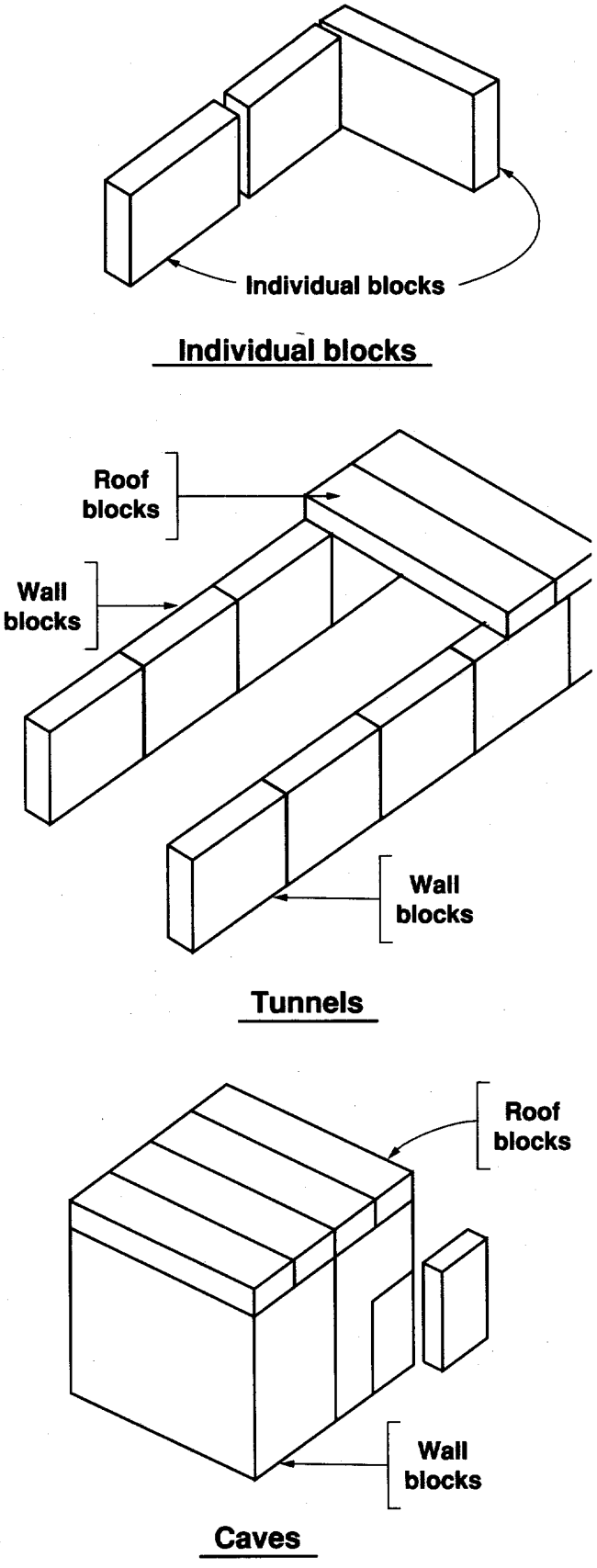

Fig. 10a-2. Block configurations.

characteristics and structural properties not generally applicable to massive shielding block structures. The UBC includes seismic loading requirements for nonbuilding structures, including rigid structures, but these requirements are not intended for such massive and unyielding objects as shielding blocks that, if restrained, are generally fixed to a concrete slab-on-grade or heavy foundation. Blocks are generally of low profile and so stiff that they will respond as a rigid body with constant acceleration, top to bottom. For all practical purposes, a block does not bend or deflect, and very little internal damping can occur. Consequently, almost all of the inertial energy induced in a massive block by lateral ground motion manifests itself as a dynamic base shear force on the connecting system fastening the block to its foundation.

Moderate earthquakes of magnitude 5 and above have been known to produce horizontal and vertical peak ground accelerations over 0.5g near the epicenter and along a causative fault. Effective peak ground accelerations greater than 0.7g have been experienced in major earthquakes. Generally steel-base clip angles that are used to bolt shielding blocks to a concrete slab have too little steel volume to absorb large amounts of energy through ductility (flexual inelastic bending). However, steel is a predictable ductile material in contrast to the brittle concrete into which most bolts are anchored, both in the block and the concrete floor slab. The ultimate failure of steel angle and bolt connectors occurs only after considerable plastic (inelastic) deformation, whereas the concrete that encompasses and anchors the bolts ultimately fails abruptly if it is not reinforced to develop a ductile anchoring medium.

The seismic provisions of the UBC define *static lateral load* as a base shear that is the summation of all horizontal inertial loads acting on a structure at any one time (Fig. 10a-3). The code also prescribes how tributary lateral loads are distributed through the height of a structure.

Shaking-table experiments have shown that various natural rocking periods can be induced into a single unrestrained block (Fig. 10a-4). However, anchoring a single block against displacement causes the block to have a very short fundamental period. Even a *cave* constructed of shielding blocks has a very short

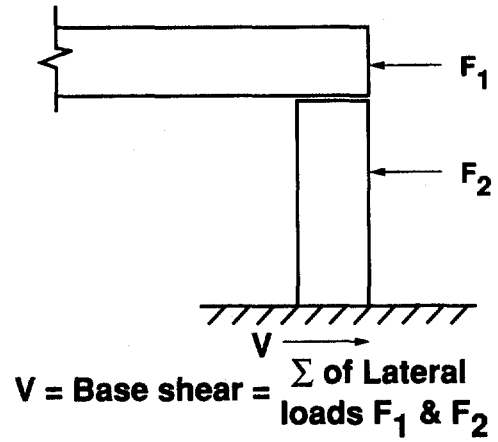

Fig. 10a-3. Static base shear.

natural period if it is braced and as ductile portions of the restraining system experience inelastic behavior, the period of the cave will vary. A dynamic analysis would be very complex and of questionable value. Consequently, it is far simpler and efficient to use a static lateral load (or base shear, V) for analysis related to the weight of the shielding and the effective peak ground acceleration estimated for a site.

In the text that follows, seismic criteria are those recommended by the authors. They were not extracted from the UBC or any other model code or industry standard.

Seismic Design Criteria for Shielding Blocks

The UBC specifies stresses to be used for design that are interdependent with its other provisions to work properly as an integrated system. It allows working stresses to be increased one-third for earthquakes and wind loads because of their short duration. For mild steel, this means that the maximum allowable stress for earthquakes is close to the elastic yield stress. However, for the purposes of designing lateral-force-resisting systems for shielding blocks, it is more practical to deal directly with yield and ultimate stresses.

These seismic criteria are based on the following considerations:

- Potential risk or frequency of damaging earthquakes and the estimated maximum intensity of horizontal ground shaking at the site

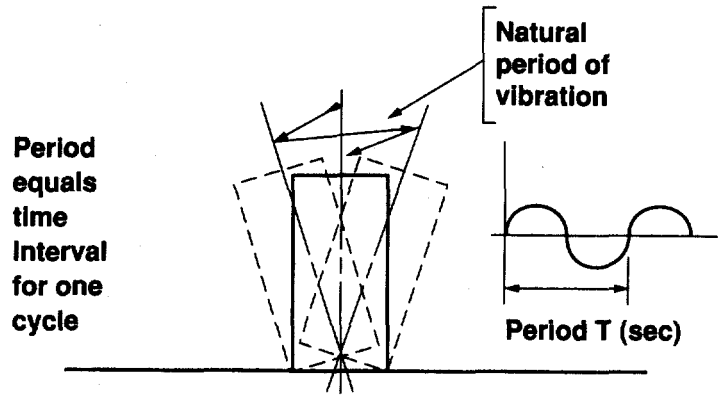

Free vibration

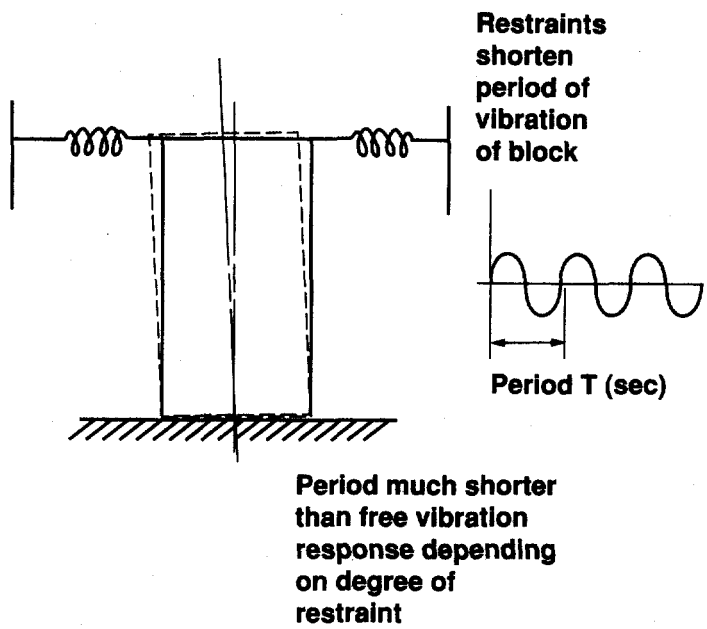

Restrained vibration

Fig. 10a-4. Dynamic vibration.

- The type of failure, ductile or brittle, to be expected from the restraining material being designed
- The consequences of failure (monetary, injury, life-safety, release of toxic materials, loss of emergency services, etc.).

In strong earthquakes, designers must anticipate that heavy shaking may cause stress excursions well beyond the elastic yield stress resulting in plastic (inelastic) deformation (Fig. 10a-5). Consequently, the extreme distortions associated with yield or ultimate strength levels (short of rupture) may make connections unsuitable for future use.

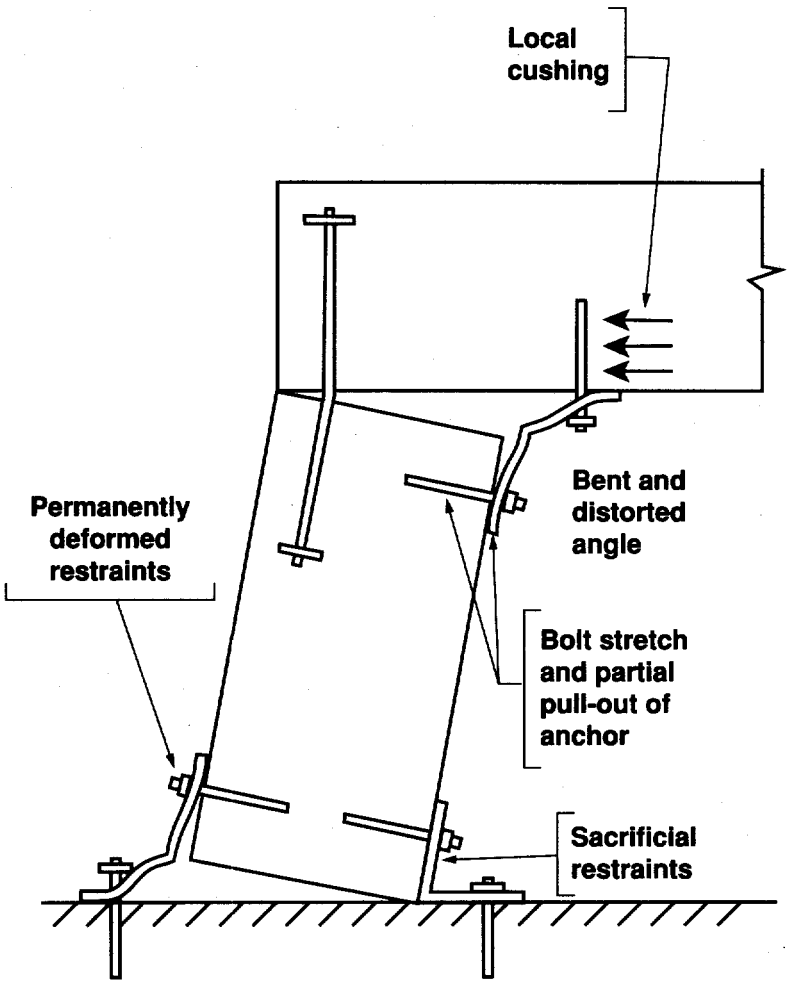

Fig. 10a-5. Inelastic distortions.

Table 10a-1 summarizes the authors' recommendations for static lateral force criteria for the seismic design of shielding block systems. These recommendations are meant to provide a level of safety equivalent to *Standard-Occupancy Structures* and *Essential Facilities* as defined by the UBC which correspond to Performance Categories 1 (PC-1) and 2 (PC-2) facilities as defined in DOE-STD-1020 (Ref. 4). These criteria provide a basis for application in various locations of the United States by utilizing the *Seismic Zone Factor* (Z) from Table 16-1 of the 1994 UBC. A *Seismic Zone Map of the United States* (Fig. 16-2 from the UBC) is reproduced here in Fig. 10a-6 for determination of the appropriate Z factor. Generally, the calculated accelerations ($2.5\ Z\ I\ C_p$) derived using Table 10a-1 recommendations will be greater than the maximum horizontal ground surface accelerations at DOE sites for Performance Category 1 (PC-1) taken from Tables C-5a and C-5b from DOE-STD-1020.

For shielding assemblies that house hazardous operations and/or essential components that must remain operational in the aftermath of a damaging earthquake, the importance factor (I) should be increased to 1.25 in keeping with UBC Table 16-K, *Occupancy Category* for *Essential Facilities*. This increase produces acceleration factors greater than the maximum horizontal ground surface accelerations listed for DOE sites (Tables C-5a and C-5b from DOE-STD-1020) for Performance Category 2 (PC-2). Although *Essential Facilities* should be designed for a base shear (V) with an importance factor (I) of 1.25, nonstructural components of systems and equipment (and their attachments) that must remain operational for life safety or other emergency needs should be designed for a lateral force using I equal to 1.50.

Table 10a-1.

Seismic criteria for static analysis of shielding block assemblies.

$$V = 2.5\, Z\, I\, C_p\, W$$

V	=	Static Base Shear
I	=	Importance Factor
Z	=	Seismic Zone Factor
C_p	=	Lateral Force Factor
W	=	Total Seismic Dead Load

Material	Cp	Stress Limit
Steel(1)	0.5	Yield Strength
Steel Diagonal Bracing and connections (Mild Steel)(2)	0.75	Yield Strength
Non-Ductile Concrete		
Bending, Compression and Shear	0.7	0.85 Ultimate Strength
Bearing	0.7	0.60 Ultimate Strength
Anchor Bolts	0.7	0.75 Ultimate Load Value(3)

(1) For structural steel or other materials that exhibit non-linear plastic behavior (similar to steel) beyond yield stress.

(2) Some higher strength steels may not exhibit a usable yield plateau and should be designed more conservatively.

(3) Based on load tests.

Seismic Zone Factors (Z)
(from UBC Table 16-I)

Zone(1)	1	2A	2B	3	4
Z	0.075	0.15	0.20	0.30	0.40

(1) Zone to be determined from UBC Seismic Zone Map of the United States, (see Fig. 10a-6).

Importance Factors (I)

Importance Category(1)	Importance Factor, I
Standard Occupancy Structures	1.00
Essential Facilities	1.25(2)
Hazardous Facilities	1.50(3)

(1) For occupancy within shielding, see UBC Table 16-K, *Occupancy Category*, for definitions.

(2) Nonstructural components of systems and equipment (and their attachments) that must remain operational for life safety or other emergency needs shall have an Importance Factor of 1.50.

(3) For shielding that houses dispersible toxic materials or equipment that must remain operational for life safety systems or containment of toxic materials.

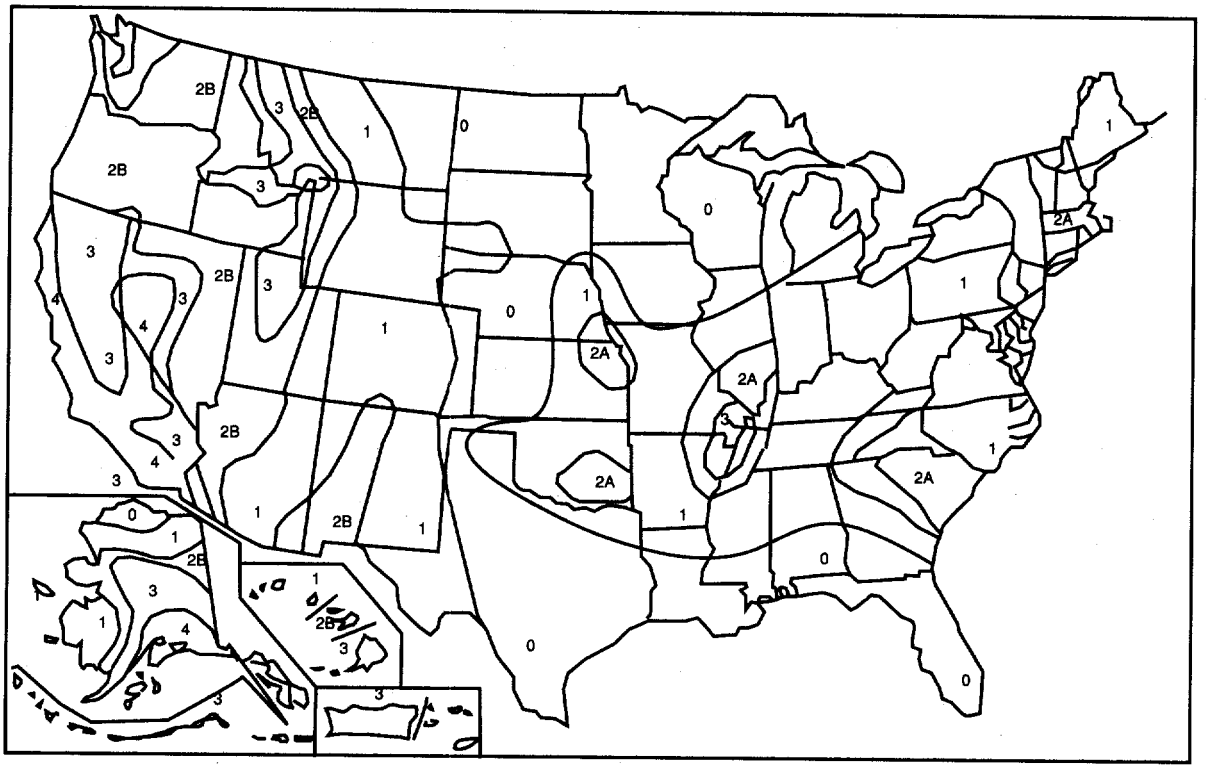

Fig. 10a-6. UBC Seismic Zone Map of the United states (Figure 16-2 from the 1994 edition). For areas outside of the United States, see UBC Appendix Chapter 16.

For design of shielding assemblies that contain highly toxic materials and related equipment that must remain operational, the I factor should be increased to 1.5 instead of 1.25. This produces acceleration factors that are conservative in relation to the maximum horizontal ground surface accelerations listed for DOE sites in Table C-5a and C-5b from DOE-STD-1020 for Performance Category 3 (PC-3). Tables C-5a and C-5b list maximum horizontal ground surface accelerations for Performance Categories PC-1 through PC-4, but recommend site-specific seismic hazard curves for PC-3 and higher. The seismic design criteria in Table 10a-1 have been formulated for PC-1 and 2 categories only. Refer to DOE-STD-1020 (Ref. 4) for specific requirements concerning facilities in Performance Categories PC-3 and higher.

Applications to Individual Blocks

Shaking-table tests show that individual unanchored blocks with a height-to-width ratio less than the static coefficient of friction will usually slide when subjected to horizontal earthquake forces, whereas blocks with a height-to-width ratio greater than the static coefficient of friction will rock. Individual blocks may be made to rock at different frequencies. In earthquakes, both horizontal and vertical accelerations are erratic, inducing chaotic movement. Consequently, blocks should be anchored to resist these phenomena.

When anchoring individual concrete blocks for lateral stability, use of a base shear calculated from Table 10a-1 results in static lateral loads that are conservative in relation to inertial forces that result from effective peak ground accelerations. Because most blocks rest on a slab-on-grade, some energy may be dissipated in mobilizing the heavily loaded slab, resulting in some attenuation of the actual ground acceleration provided the slab is adequately reinforced. Conversely, when blocks rest on structural framing that is integral with a building frame, rather than on a slab-on-grade, there may be amplification of the ground motion. Upper floor accelerations are usually amplified above the ground motion. This amplification can be calculated by dynamic analysis of the base structure and applied to the block as a higher base shear factor.

Of concern is the possibility of resonance between the forcing frequencies or ground vibrations and the fundamental period of the anchored block. An anchored block has a very short fundamental period, so an installation supported on a geologic site having a short natural period (rock) must be designed more conservatively than one on a softer foundation.

An individual block does not benefit from continuity or redundancy inherent in a unitized building system; therefore, it is essential that the base connections that transmit the ground motions to the block do not break or tear away from the floor or the block.

Once the seismic input is determined, other factors should be considered in selection of the restraining systems. If first cost economics dictate, restraint systems may be made expendable for the maximum seismic event so that ductile materials will be stressed well into the plastic or ultimate strength region. However, overturning or nonductile failure must be prevented. Bending, buckling, stretching and distorting of members and anchors are important sources of energy dissipation. At the mild steel yield stress value, with a flat-yield plateau (Fig. 10a-7), considerable reserve strain capacity is available before the steel strains reach the ultimate value and rupture ensues.

Concrete (Fig. 10a-8) and higher strength steels do not exhibit the same type of yield plateau as mild steel; therefore, yield values and reserve capacity are not as easy to define. Because some reserve capacity (short of brittle failure) should be retained for concrete, a factor of 0.85 is recommended for application to the ultimate-stress values for bending, shear, and compressive-stress capacities and 0.6 for bearing-stress capacity. Concrete is a brittle material susceptible to sudden failure or structural deterioration; therefore, it is best to be conservative when relying on its post yield strength properties. It is possible, however, when designing new foundations for shielding-block assemblies to incorporate reinforcing around anchor bolts to impart necessary toughness and ductility.

Anchorage Design

Anchors may be expansion-type anchor bolts drilled into existing concrete work or standard anchor bolts embedded in new concrete (Fig. 10a-9). *Allowable* working loads are usually given as a percentage of ultimate test loads, 25% being the most common. Considering that anchor failure in concrete is abrupt, the ultimate values should be multiplied by a capacity-reduction factor of 0.75 for use in *ultimate-strength* design. When using manufacturers' design values, one should ensure that they have been certified by the ICBO *Evaluation Services, Inc.* (See Chapter 13). Cast-in-place anchor bolts may be designed using ACI-349, Appendix B (Ref. 7).

When anchoring shielding blocks, the basic idea is to provide enough restraint to prevent dislocation and/or toppling of the block. Ductile components of the restraint system

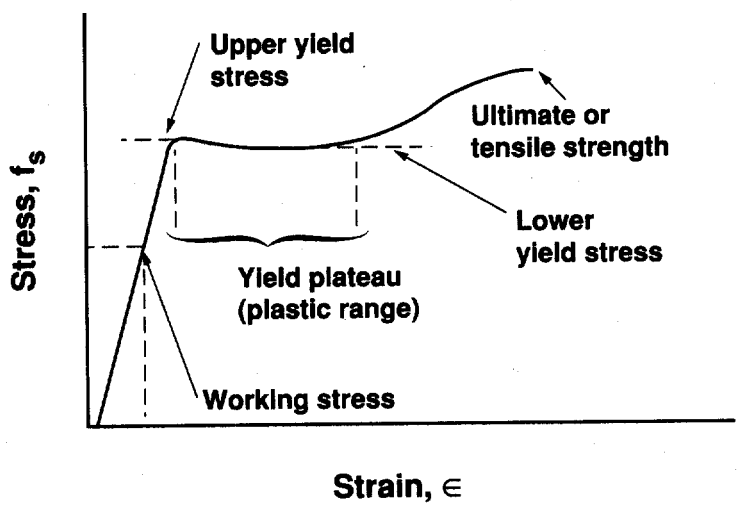

Fig. 10a-7. Structural steel stress-strain curve.

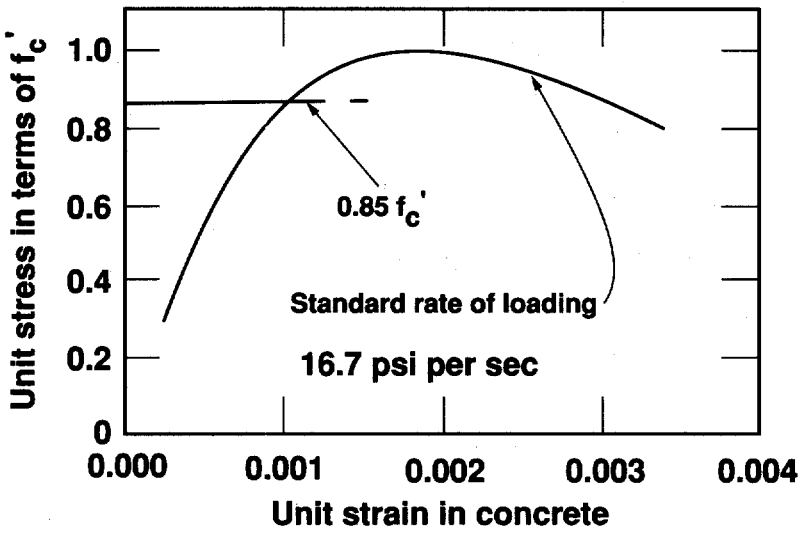

Fig. 10a-8. Typical stress-stain curve for concrete cylinders.

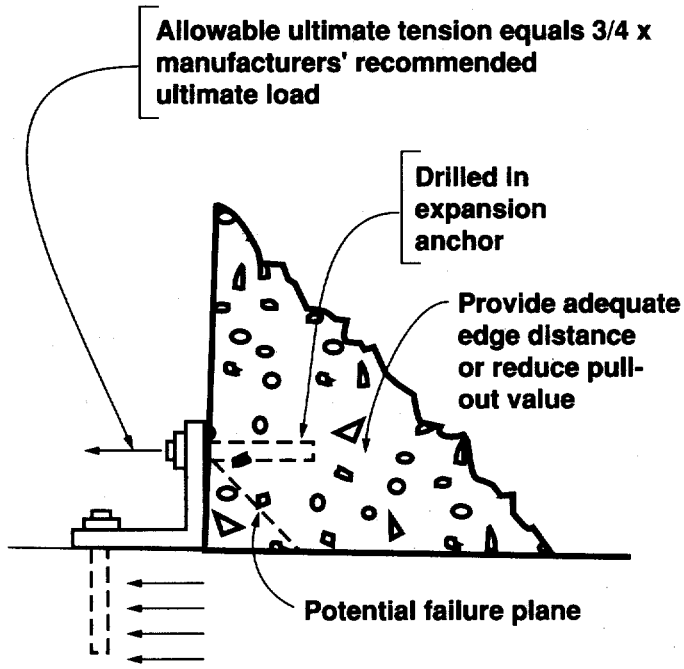

Fig. 10a-9. Anchor bolts in concrete.

should be designed for stresses (or strain conditions) approaching yield. For example, the steel base-clip angle itself should be designed to yield before brittle failure of the concrete holding the anchor bolt can occur. This allows designers to build some energy absorption into the restraining system.

Clip angles used to anchor shielding blocks should be strong enough to provide enough ductility to absorb energy in bending after yielding. When the angle is reinforced with stiffeners, it should not be so heavily stiffened that it rigidly transmits the design shear directly into the anchor bolts without deforming the clip angle.

If the angle thickness is designed to achieve the required ductility in the connection (for C_p = 0.5), its thickness will not be enough to eliminate prying action of the bolts. Therefore, an analysis should be made using the *American Institute of*

Steel Construction (AISC) procedures to compute the additional load in the bolts and drilled-in (proprietary) anchors caused by prying action.

Alternatively, prying action on the bolts can be relieved by using full-depth stiffeners on the base clip angle. Smaller or fewer bolts can then be used however, the connection will have so little ductility that it should be considered as a nonductile connection with C_p=0.7.

It is also very important that the bolts that anchor the angle to the concrete floor slab and to the concrete shielding block have proper embedment in each and adequate edge distance. The distance from an anchor bolt to a free edge of the concrete is an important consideration in anchorage design. If possible, anchor bolts should be located and embedded so that reinforcing steel intercepts potential cracking planes. If sufficient embedment depth and edge distance to develop the strength of the anchor cannot be achieved, then the capacity values for shear and pull-out of the anchor should be reduced appropriately. Shear and tension interaction should be accounted for in the anchor if they can occur simultaneously. If several bolts are parallel to a free edge, the effect of overlapping failure planes on the concrete design strength also must be taken into account. If floor clip angles are used on opposite sides of the block, consider using a through bolt. This eliminates pull out problems, and leaves shear as a consideration. It is still important to have reinforcing bars between the bolt and the edge of the block. For these important considerations, readers are referred to the article, *Guide to the Design of Anchor Bolts and Other Steel Imbedments* (Ref. 5). See also *Anchors in Concrete, Design and Behavior,* (Ref. 6), and *Code Requirements for Nuclear Safety, Related Concrete Structures* (Ref. 7).

Prevention of Dislocation and Overturning

One of the easiest and least expensive ways to minimize block dislocation is to key blocks together at coplanar surfaces and to the floor (Fig. 10a-10). Where blocks in line abut each other, continuous tongue-and-groove keyways along the contact surfaces are effective. Floor keys can be cast in new construction where block locations have been predetermined, but chipping or casting keyways in existing construction is not always feasible. Anchorage is still required in any case. Heavy pins can be placed in holes drilled into existing slabs (Fig. 10a-11) so that they protrude up into holes formed in the bottom of the block when the block is set in position on the floor. Lateral loads are transferred by shear and bending in the pin and bearing of the pin on the concrete, and through shear and bearing at the keyway edges. In lieu of pins at the base, angle clips can be attached to the block and secured to the floor with pins or anchor bolts (Fig. 10a-12). Flat-steel plate inserts with substantial anchors into the concrete can be cast in the face of the base of the block. Base angle clips can then be welded to these plates, or stud anchors can be welded perpendicular to the flat face of the plate and block and used to bolt (clamp) the base angle to the face of the block. The weldment may be the most brittle point in the system. If in the designers' judgement this is so, then a C_p = 0.7 should be applied.

Other anchoring systems can be devised with the function of keeping the concrete floor slab from shearing away from the blocks as the ground induces earthquake motion into the block through the slab.

When new shielding can be tied into existing anchored shielding block installations, the ability of the existing shielding to resist movement of the new blocks or assemblies may be utilized. Intersecting blocks or block walls can also be placed to resist displacement. Designers should consider the blocks as a system and provide base anchors, keys, pins, and ties as necessary to maintain elements in place.

Generally, building framing members, especially columns, should not be used to resist lateral loads from massive shielding blocks. Blocks and their restraints should be free and adequately clear of building support members. The use of framing elements that are part of the vertical-load-carrying building frame should always be avoided.

Base anchors (Fig. 10a-13) are effective against sliding and differential displacement, but are not always a positive safeguard against overturning under severe or sustained rocking motion. Overturning restraint (Fig. 10a-14) can be incorporated with base anchors in the form of

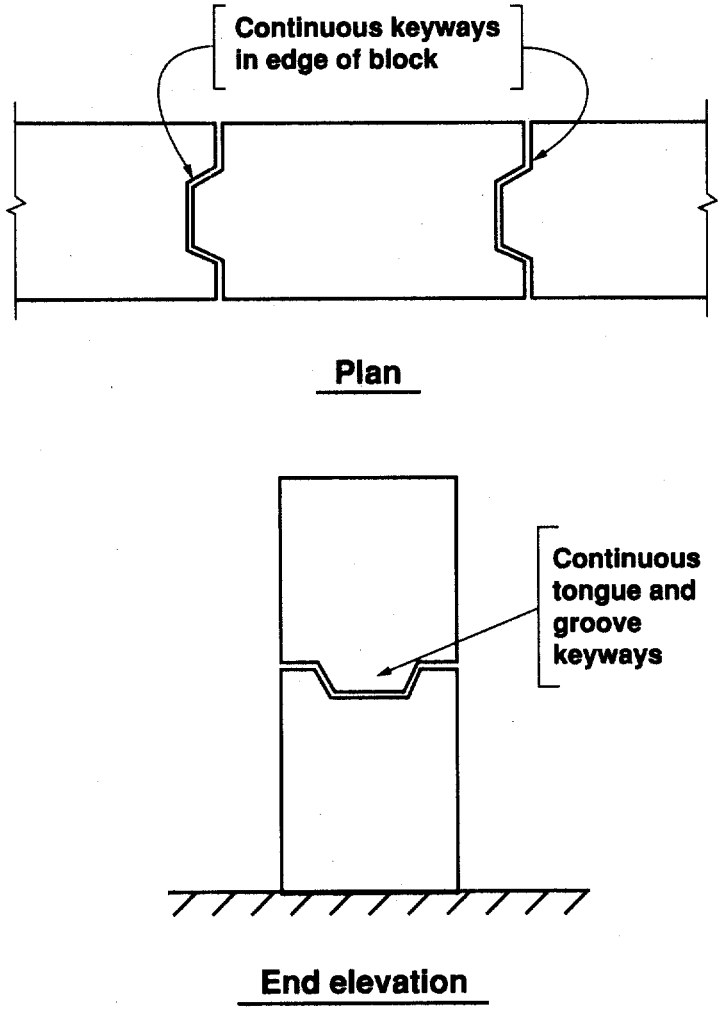

Fig. 10a-10. Concrete keyways.

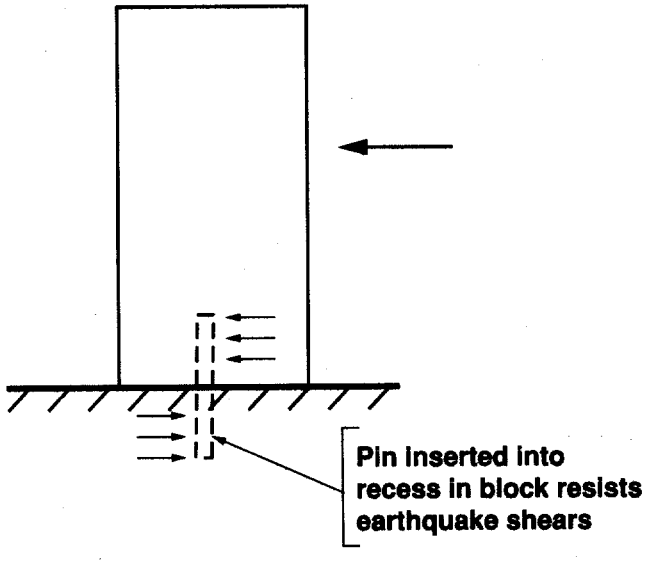

Fig. 10a-11. Heavy shear pins.

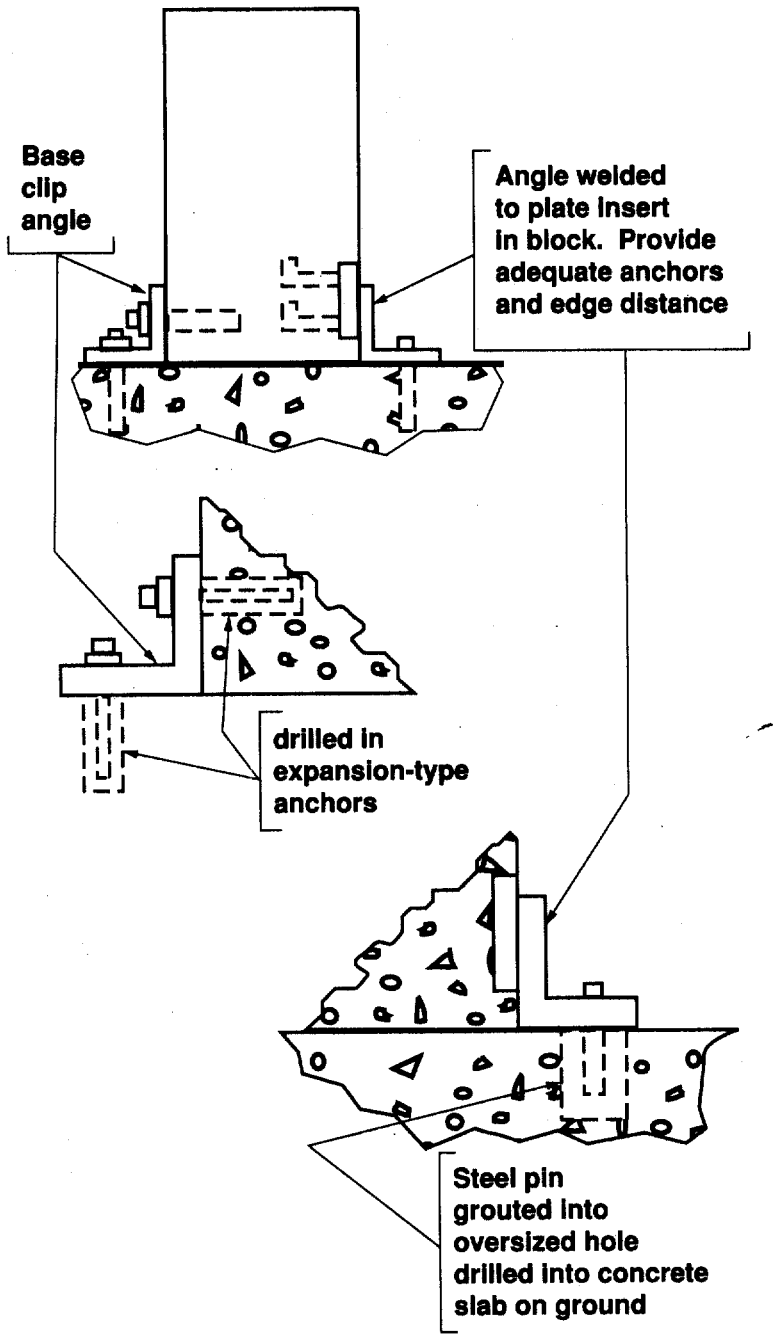

Fig. 10a-12. Securing angle clips with pins or anchor bolts.

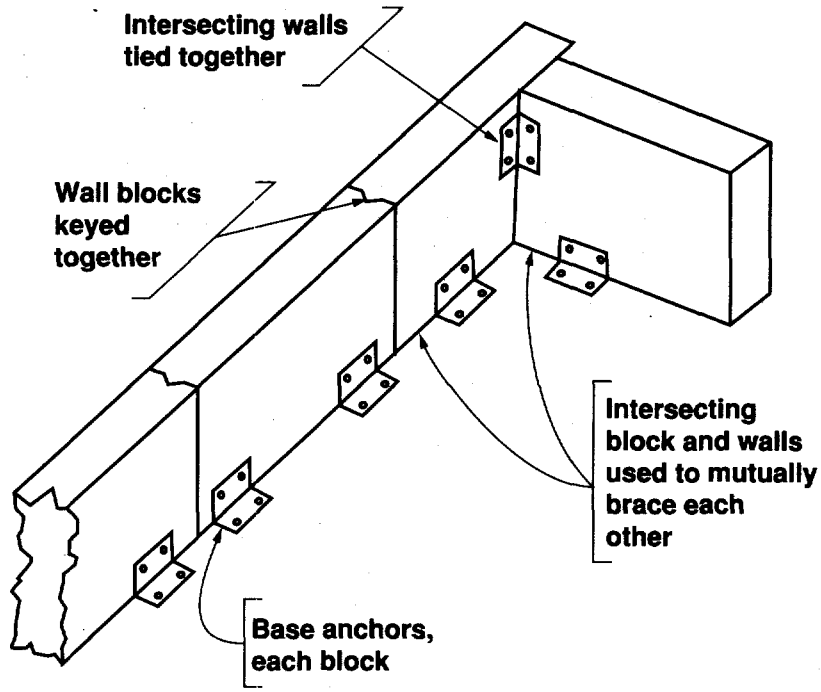

Fig. 10a-13. Base anchors.

tie-down rods or straps attached to block support framing systems, foundations, or other ballast with sufficient resistance or mass to counteract uplift loads.

Diagonal bracing struts perpendicular to the long face of blocks are a good method of maintaining block stability. Bracing struts should rest or react against the top third of the block height. The principal drawback to the use of struts is their encroachment on space adjacent to the blocks. To avoid this problem, cantilevered steel columns can be connected to horizontal beams that engage the faces of the blocks such that the beams span horizontally between columns and deliver the (lateral) block load to the cantilever columns. Cantilever action can be obtained by anchoring the bottom of the column in a caisson or shaft drilled into the ground and filled with concrete (Fig. 10a-15). Formulas are available in the UBC to define the drilled shaft's depth and diameter. Soil-bearing values can usually be interpolated from previously available information or conservatively assumed from visual site inspection, geologic maps, or code tables.

Design of Shielding Walls and Tunnels for Earthquakes

Often, shielding blocks are assembled in a longitudinal tunnel configuration (without transverse walls) with roof blocks supported directly on longitudinal wall blocks. It is imperative that a support and anchorage system for the component blocks be provided to prevent misalignment or shifting of tunnel wall blocks that could cause the collapse of roof blocks.

The premise that the base anchorage should be designed to prevent brittle failure yet provide ductility in the angle is as valid for tunnel configurations as for individual blocks. However, it is possible to take advantage of additional energy-dissipating phenomena at the interface of wall and roof. Connections can be devised that allow for distortion and stress reversal that, along with friction and damping, will relieve the effects of dynamic loading. Non-ductile base connections should be designed for seismic forces based on $C_p = 0.7$, but the ductile structural elements above the base can be designed for seismic forces (see Table 10a-1)

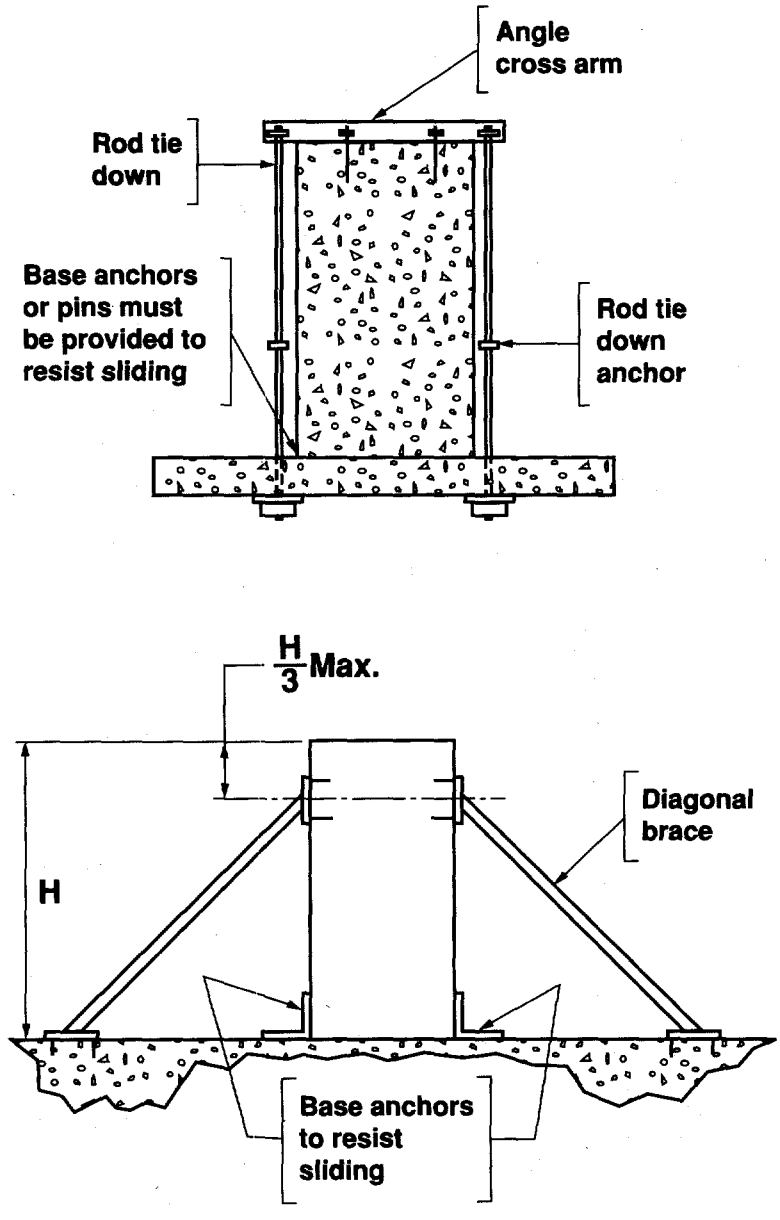

Fig. 10a-14. Overturning restraints.

based on $C_p = 0.5$ and still meet energy demand through inelastic deformation. It is necessary to design the ductile lateral-force-resisting system and connections to yield and let the strain energy of yielding absorb the load without rupture.

To prevent premature or brittle failure of a connection, one should differentiate between the ductile and more brittle features of the same connection. The ductile or steel portion can be designed for yield stress against seismic forces (see Table 10a-1) based on $C_p = 0.5$ and the concrete anchorage for the same connection should be capable of withstanding stresses based on 0.85 ultimate stress against seismic forces based on $C_p = 0.7$. In most instances, the steel

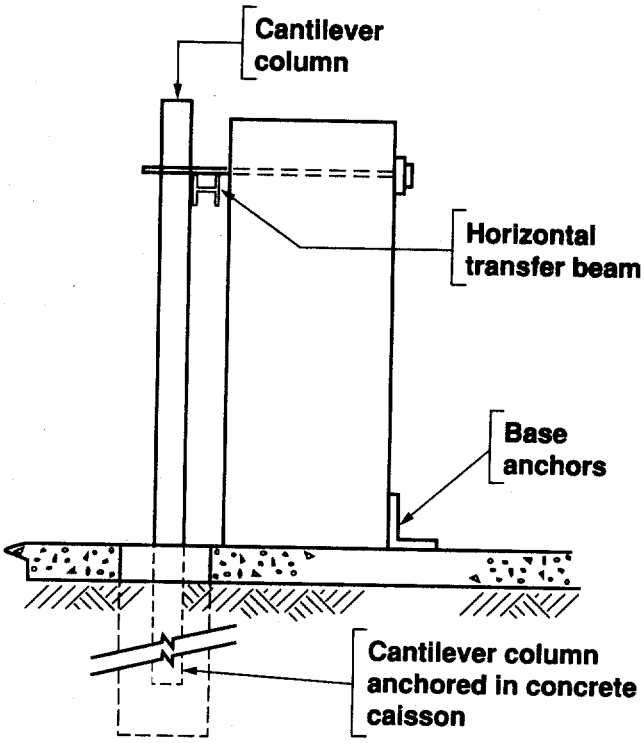

Fig. 10a-15. Cantilever restraints.

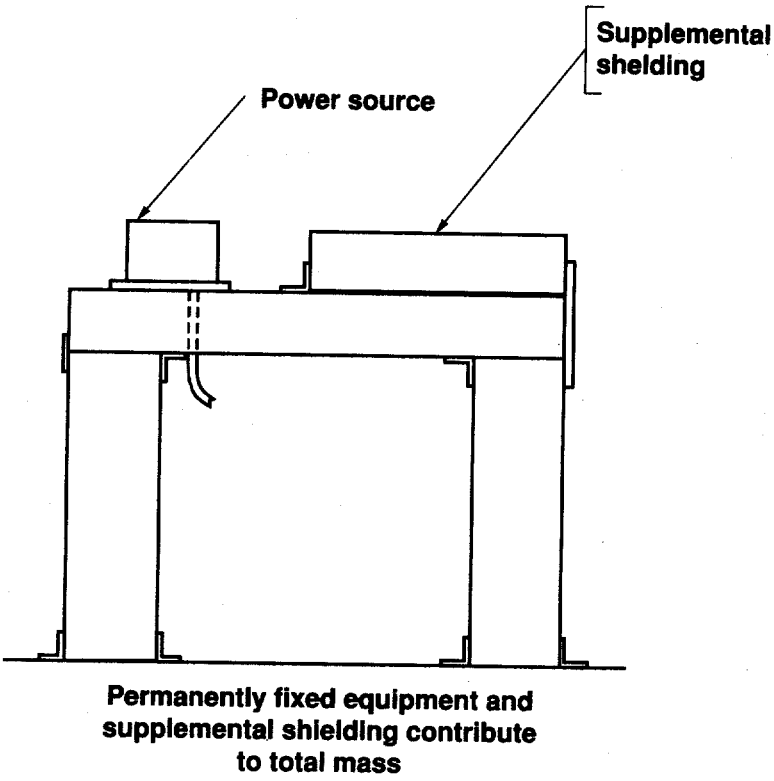

Fig. 10a-16. Tunnel assembly cross section.

parts (i.e., angles, plates, pins, and bolts) can be designed using the yield strength of the material. However, where a steel member relies on the strength of the concrete for effectiveness, such as anchor bolts, pins, and drilled-in expansion anchors bearing against concrete, the individual part of the connection dependent on the concrete should be sized using $C_p = 0.7$ against maximum bending stresses at 0.85 times the ultimate strength of concrete and bearing stresses at 0.6 times the ultimate strength of the concrete. Thus, concrete anchorages should be tough enough to allow the beneficial dissipation of energy through the inelastic distortion of the ductile materials in the connection.

With block structures having roofs, the question arises as to what gravity loads to use to calculate the seismic design force. Normally, one need only consider the dead weight of the wall and roof blocks. However, heavy experimental equipment, supplemental shielding, and power sources are frequently anchored permanently on the roof (Fig. 10a-16). Unless these accessory weights are effectively isolated, they (or some proportion) must be included in the dead load calculation. This effective dead load (W) used in the equation $V=2.5\ Z\ I\ C_p\ W$, results in the base shear (V), which is the static lateral force to be applied to the tunnel assembly. Materials and equipment placed on the roof, but unsecured will move around during an earthquake, but only a portion of its weight needs to be considered. However, if it is unsecured, it could *walk* off the roof. Consequently, it is best to secure such items.

As with individual blocks, a primary principle is isolation of the tunnel and its components from building supports or adjacent structures. Wall blocks should be keyed to adjacent blocks and roof blocks keyed or mechanically interlocked to prevent relative movement (Fig. 10a-17). Base angle clips and pins can be incorporated to prevent sliding. Frame action can be utilized by incorporating angles and brackets to develop moment capacity at roof block and wall block interfaces. In this situation, the clip angles transfer seismic energy directly into this interlocked *frame* for dissipation rather than relying upon the clip angles alone to dissipate energy. For this reason, clip angles should be sufficiently stiffened to transfer several cycles of stress reversal to the *frames* created by the connections. Moment can be resisted at the base by a couple provided by base clip angles on both sides of wall blocks. Care should be taken in the analysis to account for the fact that the blocks are extremely stiff in relation to the connections. Tiedowns to resist overturning and uplift should be utilized if the base clip angles cannot prevent the blocks from rocking severely.

In tunnel construction, the plane of the ceiling or underside of the roof is a convenient place to put horizontal diagonal bracing. This location is preferred when the roof blocks must be occasionally removed. A horizontal truss system (Fig. 10a-18) can be utilized to receive lateral loads from the blocks. Truss reactions must be transferred to the foundation through frame action of the wall and roof blocks or via extra framing, i.e., diagonal bracing struts and/or frames at the ends of the tunnel or spaced intermittently along the length of the tunnel. To compensate for potential buckling of diagonal bracing, the design force should be increased by a factor of 1.5 for yield stress analysis. To maintain the same concept of resistance for the truss system, one should apply the 1.5 load factor for the yield stress analysis by modifying the earthquake coefficient C_p to 1.5x0.5 or 0.75. This provision has been included in the *Seismic Criteria for Static Analysis of Shielding Blocks Assemblies* summarized in Table 10a-1. First-yield stresses should be utilized for the diagonal bracing with this modified coefficient.

If seismic truss reactions at the ends of the tunnel or reaction points are transferred to the foundation by moment frame action of the wall and roof block assembly, these seismic reactions for the moment frame need not include the 1.5 load-modification factor when designing the moment frame connections and base anchorages. Design of truss member connections to block assemblies (moment frame) should use seismic reactions derived with the 1.5 modifier. When diagonal braces in a vertical plane are employed to hold the horizontal truss in the roof plane, the modified lateral force factor, $C_p = 0.75$, should continue to control sizes and details. Foundation bearing pressures can be evaluated on the basis of reactions calculated without the 1.5 factor, which applies only to the braces and their connections.

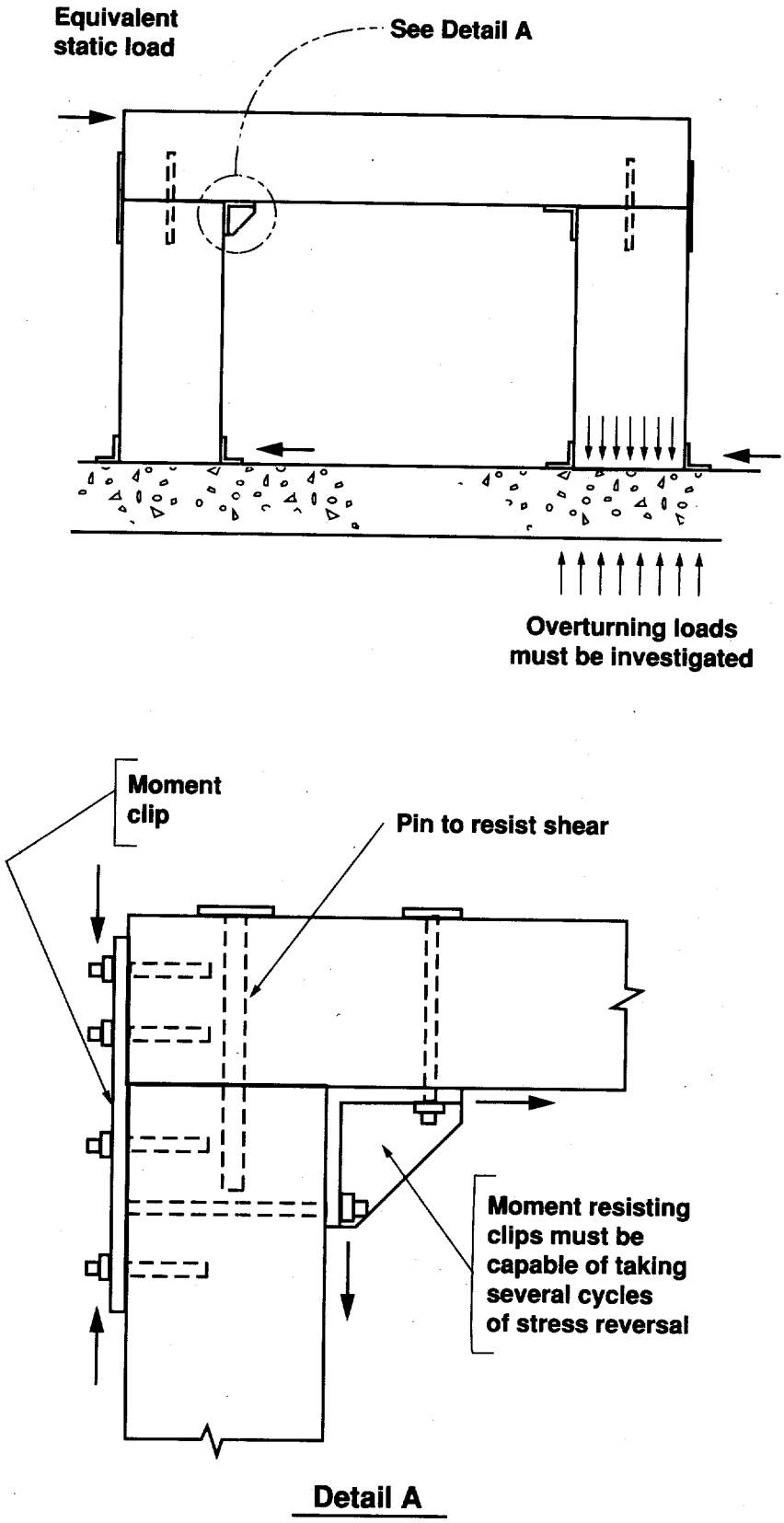

Fig. 10a-17. Frame action details.

Diagonal bracing can also be located in the plane of the top of the roof blocks if the exposure of the framing poses no hazard to personnel and does not interfere with experimental equipment or occasional dismantling. Depending on design loads, connection of the truss diagonals to the blocks (Fig. 10a-18, Section A-A) may be accomplished with anchor bolts, drilled-in-place concrete anchors, welded studs, or pins. Most support techniques used for individual blocks or blocks in-line are equally adaptable to tunnel-like or roofed-over configurations. Diagonal struts can be used to brace each wall block, or a system of horizontal beams and cantilevered columns can be integrated to support the walls. Because the inertial loads to be resisted are large, the problem of controlling deflection is encountered when using cantilevers. A check of deflections is necessary, coupled with an evaluation of potential effects of translations and rotations on the stability of the cell unit. Elastic properties of the ground resistance against the caisson must be considered in determining deflections. The modulus of subgrade reaction is a useful parameter for this purpose.

Design of Shielding Caves for Earthquakes

Because cave facilities resemble buildings more than other shielding configurations (Fig. 10a-19), one might logically reassess the earthquake coefficient for such caves relying on experience with similar massive building structures. Generally, however, the authors recommend the use of higher lateral load coefficients and yield stress capacities that are more in keeping with the primary response of a massive and very rigid structure such as a cave of shielding blocks.

Designers must make sure that there is an uninterrupted path for transferring loads in the bracing members to the ground or bearing medium. Collectors can be used to drag loads from areas tributary to the bracing elements (Fig. 10a-20). Connections and splices must be strong enough to prevent collected loads from breaking the link to the bracing members and isolating part of the cave. This type of failure would leave the cave without lateral support and susceptible to collapse.

Caves by definition usually have four walls mutually perpendicular to each other; therefore, these walls can be used to counteract loads concentrated by collectors. Internal stresses within the blocks are seldom critical, but connections of bracing elements or collectors to the blocks must be strong enough to prevent premature breaking away (Fig. 10a-21). Resisting loads by members in tension and bolts in shear is the preferred approach. Bolts should be high-strength fasteners tightened in accordance with recommended standard procedures. Values for slip-critical bolts should be used whenever high-strength bolts are used in conjunction with welding. Drilled-in-place proprietary anchors may be used; however, cast-in-place anchors or bolts epoxied into drilled holes are tougher and more reliable.

Other building design techniques are useful for caves, the most expedient being the use of the cave roof as a diaphragm. Shear plates can be used to transfer seismic shears from block to block, and structural steel shapes can form flanges (chords) for the diaphragm and load-transfer elements (Fig. 10a-22). Individual wall blocks can be anchored together and to the floor to complete the path to the ground to transfer the dynamically induced forces. Where walls can be unitized, tie-downs at the ends to resist uplift are seldom necessary. Interior cross walls, if permanently located, are useful as additional resisting elements, but they must be anchored to the roof and floor for their proportionate load. Maintaining integrity and alignment are necessary adjuncts to a satisfactory system. Previous emphasis on keys, pins, and mechanical interlocks applies.

Supplemental bracing schemes external to the shielding blocks are sometimes a viable alternative (Fig. 10a-23).

Diagonally braced or moment-resisting frames may be used, but additional caution is necessary when relying on ductile moment-resisting frames. Because blocks are unyielding and resist movement, they prevent the necessary energy-absorbing distortions of the frame from taking place. This could lead to premature failure of the assembly or anchorages because the frame may not be able to absorb the required energy through plastic yielding before failure of the stiffer elements. A careful compatibility

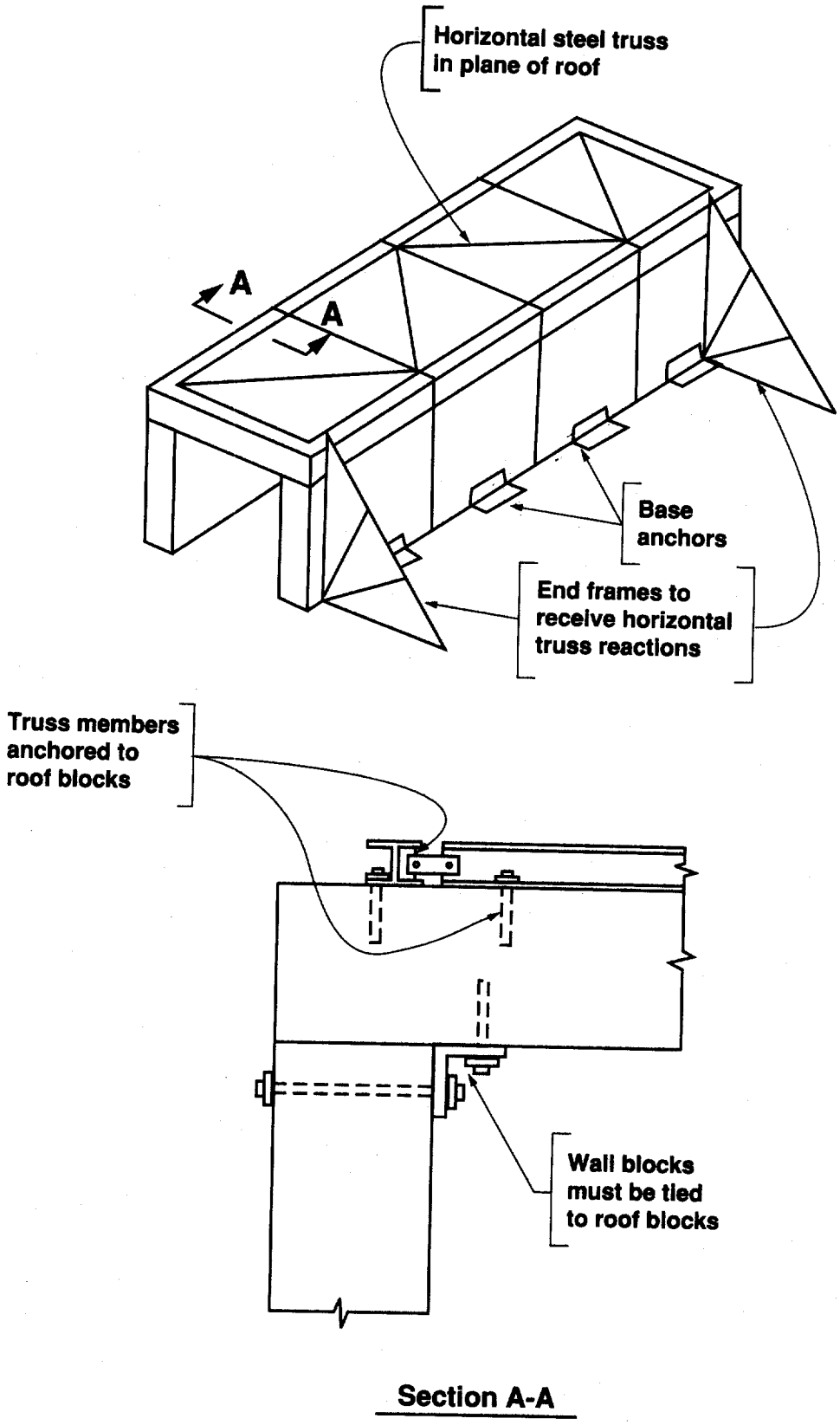

Fig. 10a-18. Horizontal diagonal bracing.

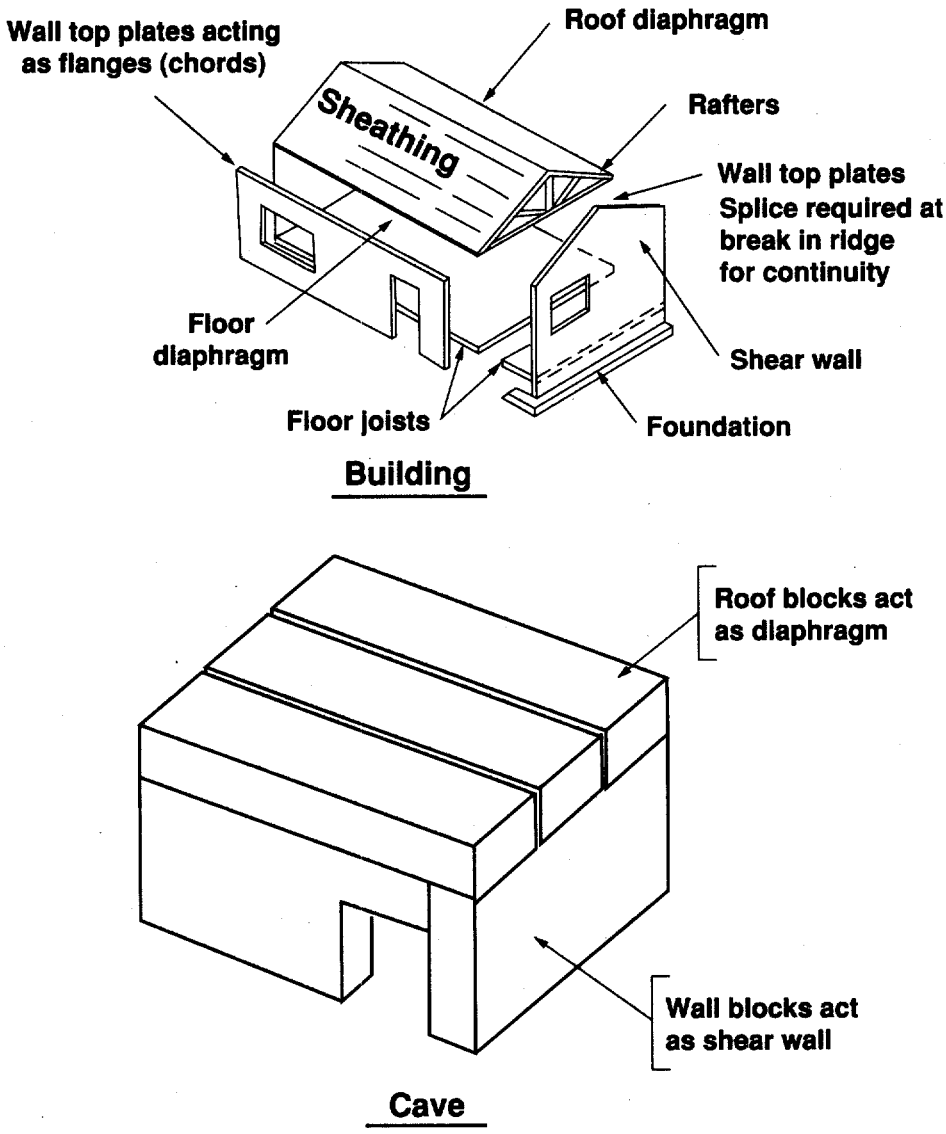

Fig. 10a-19. Cave-building analogy.

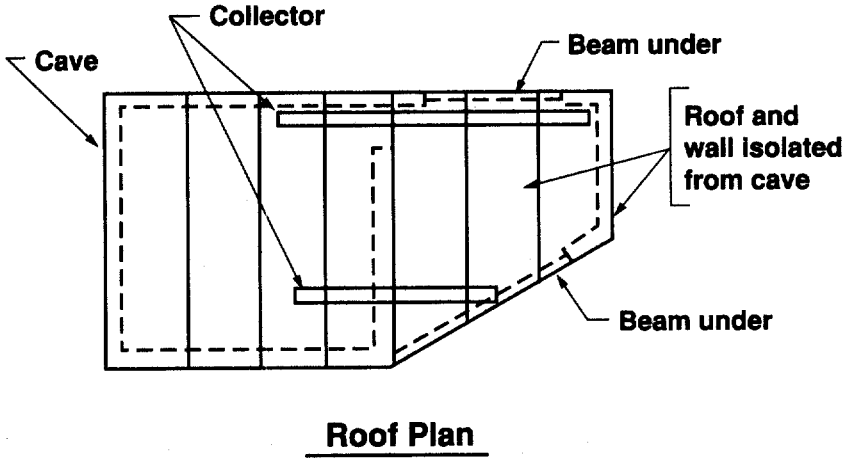

Fig. 10a-20. Load collectors.

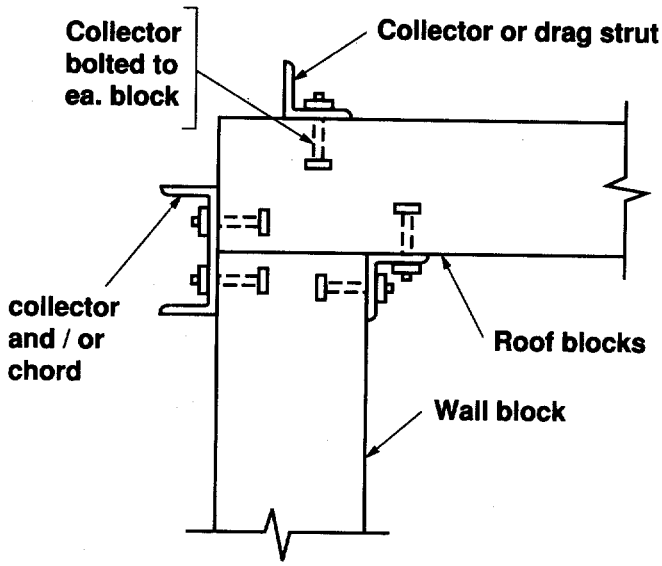

Fig. 10a-21. Cave assembly connections.

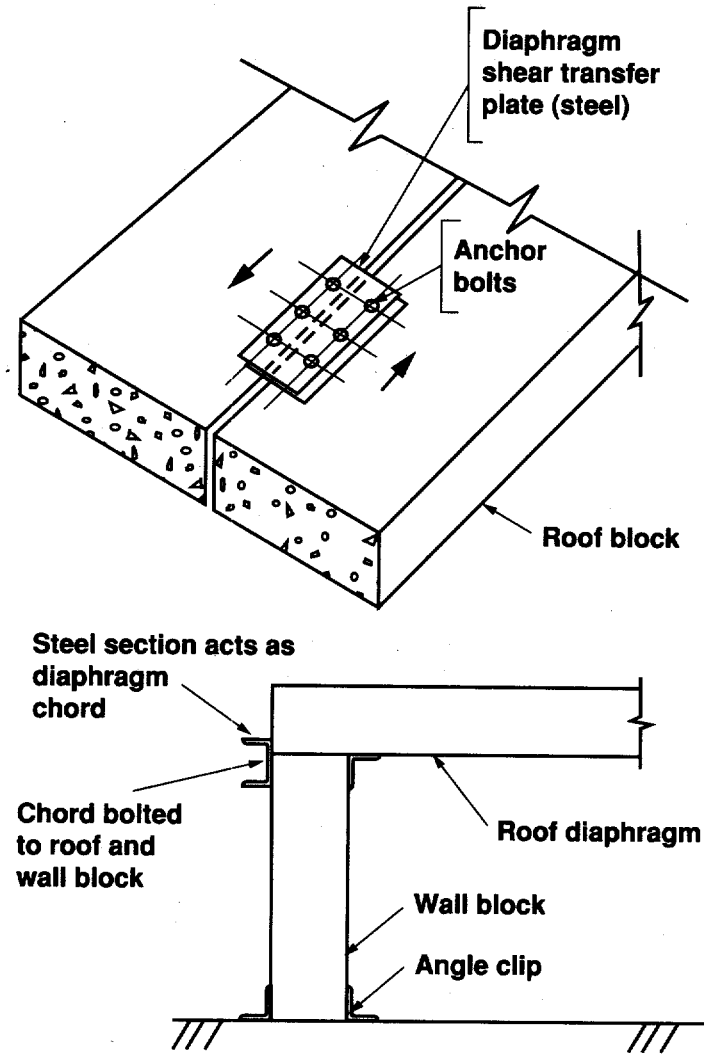

Fig. 10a-22. Shear transfer plates and roof chords.

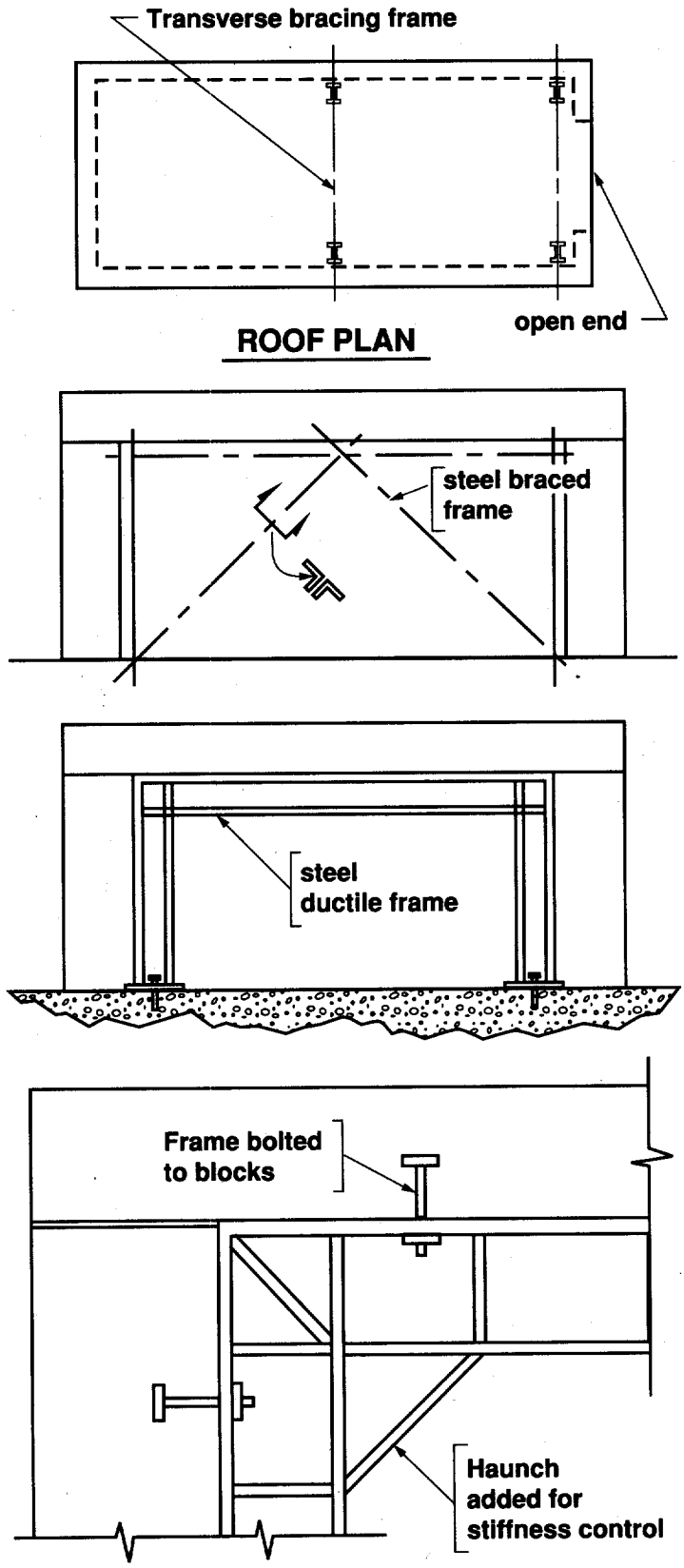

Fig. 10a-23. Supplemental bracing schemes.

analysis is therefore necessary. Usually a stiffer frame is required than would be indicated from a design for moments and shears only.

A concentric diagonally-braced steel frame (Fig. 10a-24), if properly designed and detailed, will also work. It must have sufficient strength to undergo several sudden load reversals during any seismic event; thus, members and connections must be tough enough to resist severe impulse loading. Strength can best be achieved by designing the system to carry as much of the load as possible by members in tension. Toughness can be attained by making the connections of members strong, durable, and capable of developing the full plastic strength of the connected steel members. Regardless of the direction of load (tension or compression) indicated by analysis, connections should be designed to develop the most critical strength of the member used, be it tension or compression, so that severe stress reversals can be accommodated. Thus, the connections will be able to transfer member forces without failing before the member does. It must be assumed that a tension member will be stressed in compression and vice versa; therefore, steel connections should be designed for the actual plastic strength of the member in either mode. Designers should check the building code for special requirements for steel structures resisting forces induced by earthquake motions as related to braced frames, bracing connections, and bracing configurations. Because these columns probably won't carry gravity loads, the strong-column versus weak-beam requirement is not so important.

The eccentric-braced frame is coming more into use in earthquake design. This system adds ductility absent in concentric-braced frames. Energy is absorbed in bending a link beam, lessening the potential for buckling of the diagonal brace. Designers must follow published design procedures and detailing recommendations for the connections of the brace and link beam. The eccentric-braced frame easily adapts to yield and/or ultimate strength analysis.

Some newer developments in earthquake-resistant design include energy-dissipating systems such as base isolation and passive devices that absorb energy by slipping, flexing, and distorting. These systems will result in larger lateral displacement of the isolated structure. Generally, large displacements should be avoided in shielding block installations or accounted for with conservative clearances.

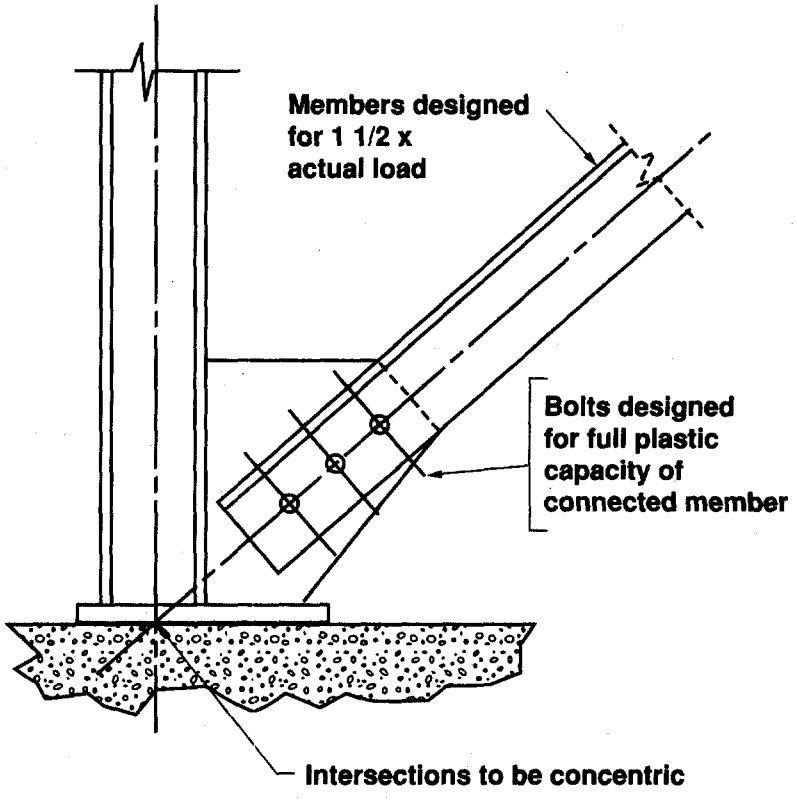

Fig. 10a-24. Concentric brace connection.

Summary of Recommended Earthquake Design Criteria for Shielding Blocks

The earthquake design criteria for bracing concrete shielding blocks should take into consideration site specific seismicity, the type of system used to brace the shielding blocks against earthquake ground motions, and the consequences of failure.

In keeping with Table 10a-1, the formula, $V=2.5\ Z\ I\ C_p\ W$, is used to determine the base shear, V, to be applied for static lateral force analysis and design.

Site seismicity is incorporated by determining the seismic zone in which the site is located from the UBC (Ref. 3) *Seismic Zone Map* (Fig. 10a-6), and selecting the *Seismic Zone Factor*, Z, from Table 10a-1. Alternatively, the effective peak ground acceleration from site-specific hazard curves may be used for Z based upon methodology specified in DOE-STD-1020 (Ref. 4).

The *Importance Factor*, I, is obtained from the appropriate chart in Table 10a-1. This selection should be in keeping with the performance categories described in Reference 4.

The lateral force factor, C_p, varies with the type of bracing system and within the system, by the ductility (or lack of) of each component. For ductile bracing systems, connections, and/or components that are constructed of materials (such as structural steel) that exhibit ductile nonlinear behavior at stresses at or beyond their yield points, a value of $C_p = 0.5$ is recommended, using the actual yield stresses of the ductile materials in the earthquake-resisting system. Diagonal bracing members and their connections should be designed to resist forces resulting from a base shear increased by a load modification factor of 1.5 times 0.50, or a $C_p = 0.75$, to obtain a greater strength and safety factor against buckling. Ductile diagonal bracing members and their connections should be designed utilizing yield stresses.

For nonductile systems and connections constructed of structural materials that do not exhibit reserve strain energy capacity resulting from nonlinear behavior, like non-ductile reinforced concrete, a value of $C_p = 0.7$ is recommended, utilizing ultimate-stress values reduced by an appropriate capacity reduction factor. For normal reinforced concrete, it is recommended that a capacity-reduction factor of 0.85 be applied to the ultimate strength values of concrete for bending, shear, and compressive stresses and 0.6 for bearing stresses.

For the design of anchor bolts or proprietary expansion anchors that depend on concrete for their ultimate-load capacity, use 0.75 times the manufacturer's ultimate-load values (based on load tests), with proper consideration for edge distance and embedment of the anchors. Anchor bolts and shear pins should be designed to be tough enough to allow the beneficial dissipation of energy by the distortion of the steel elements of the connection before failure of the anchorage.

References

1. *Sliding Response of Rigid Bodies to Earthquake Motions*, M. Aslam, W.G. Godden, D.T. Scalise, LBL-3868, Lawrence Berkeley Laboratory, Berkeley, California, 1975.

2. *Rocking and Overturning Response of Rigid Bodies to Earthquake Motion*, M. Aslam, W.G. Godden, D.T. Scalise, LBL 7539, Lawrence Berkeley Laboratory, Berkeley, California, 1978.

3. *Uniform Building Code*, International Conference of Building Officials Whittier, California, 1994.

4. *Natural Phenomena Hazards Design and Evaluation Criteria for DOE Facilities*, DOE-STD-1020-94, U.S. Department of Energy, Washington, D.C., 1994.

5. *Guide to the Design of Anchor Bolts and Other Steel Imbedments*, R.W. Cannon, D.A. Godfrey, and F.L. Moreadith, Concrete International, 1981.

6. *Anchors in Concrete, Design and Behavior*, G.A. Senkin, H.B. Lancelot, III Editor, 1991.

7. *Code Requirements for Nuclear Safety, Related Concrete Structures*, ACI-349, Appendix B.