UCRL-JC-139427
PREPRINT

Low Temperature and High Pressure Evaluation of Insulated Pressure Vessels for Cryogenic Hydrogen Storage

Salvador Aceves
J. Martinez-Frias, Centro de Ingenieria y Desarrollo Industrial
O. Garcia-Villazana, FIMEE, Universidad de Guanajuato

This paper was prepared for submittal to the
Department of Energy Hydrogen Program Review Meeting
San Ramon, California
May 9 - 11, 2000

6/25/00

Lawrence Livermore National Laboratory

This is a preprint of a paper intended for publication in a journal or proceedings. Since changes may be made before publication, this preprint is made available with the understanding that it will not be cited or reproduced without the permission of the author.

DISCLAIMER

This document was prepared as an account of work sponsored by an agency of the United States Government. Neither the United States Government nor the University of California nor any of their employees, makes any warranty, express or implied, or assumes any legal liability or responsibility for the accuracy, completeness, or usefulness of any information, apparatus, product, or process disclosed, or represents that its use would not infringe privately owned rights. Reference herein to any specific commercial product, process, or service by trade name, trademark, manufacturer, or otherwise, does not necessarily constitute or imply its endorsement, recommendation, or favoring by the United States Government or the University of California. The views and opinions of authors expressed herein do not necessarily state or reflect those of the United States Government or the University of California, and shall not be used for advertising or product endorsement purposes.

LOW TEMPERATURE AND HIGH PRESSURE EVALUATION OF INSULATED PRESSURE VESSELS FOR CRYOGENIC HYDROGEN STORAGE

S. M. Aceves,
Lawrence Livermore National Laboratory
7000 East Ave., L-641
Livermore, CA 94551, USA
saceves@llnl.gov

J. Martinez-Frias
Centro de Ingenieria y Desarrollo Industrial
Queretaro, Qro., Mexico
jmartinez@cidesi.mx

O. Garcia-Villazana
FIMEE, Universidad de Guanajuato
Salamanca, Gto. Mexico
villa@salamanca.ugto.mx

Abstract

Insulated pressure vessels are cryogenic-capable pressure vessels that can be fueled with liquid hydrogen (LH_2) or ambient-temperature compressed hydrogen (CH_2). Insulated pressure vessels offer the advantages of liquid hydrogen tanks (low weight and volume), with reduced disadvantages (fuel flexibility, lower energy requirement for hydrogen liquefaction and reduced evaporative losses). The work described here is directed at verifying that commercially available pressure vessels can be safely used to store liquid hydrogen. The use of commercially available pressure vessels significantly reduces the cost and complexity of the insulated pressure vessel development effort. This paper describes a series of tests that have been done with aluminum-lined, fiber-wrapped vessels to evaluate the damage caused by low temperature operation. All analysis and experiments to date indicate that no significant damage has resulted. Required future tests are described that will prove that no technical barriers exist to the safe use of aluminum-fiber vessels at cryogenic temperatures.

Introduction

Hydrogen-fueled vehicles present features that make them serious candidates as alternatives to today's petroleum-powered vehicles. Hydrogen vehicles can use the advanced technology of electric vehicles to improve environmental quality and energy security, while providing the range, performance, and utility of today's gasoline vehicles.

Probably the most significant hurdle for hydrogen vehicles is storing sufficient hydrogen on board. Hydrogen storage choices can determine the refueling time, cost, and infrastructure requirements, as well as indirectly influence energy efficiency, vehicle fuel economy, performance, and utility. There are at least three viable technologies for storing hydrogen fuel on cars. These are compressed hydrogen gas (CH_2), metal hydride adsorption, and cryogenic liquid hydrogen (LH_2). Each of these has significant disadvantages.

Storage of 5 kg of hydrogen (equivalent in terms of energy to 19 liters; 5 gallons of gasoline) is considered necessary for a general-purpose vehicle, since it provides a 640 km (400 mile) range in a 34 km/liter (80 mpg) hybrid vehicle or fuel cell vehicle. Storing this hydrogen as CH_2 requires a volume so big that it is difficult to package in light-duty cars (Pentastar Electronics, 1997). The external volume for a pressure vessel storing 5 kg of hydrogen at 24.8 MPa (3600 psi) is 320 liters (85 gal). Hydrides are heavy (300 kg for 5 kg of hydrogen, Michel et al., 1996), resulting in a substantial reduction in vehicle fuel economy and performance.

Low-pressure LH_2 storage is light and compact, and has received significant attention due to its advantages for packaging (Braess and Strobl, 1996). Significant recent developments have resulted in improved safety (Pehr, 1996a, 1996b), and fueling infrastructure (Hettinger et al, 1996). Disadvantages of low-pressure LH_2 storage are the substantial amount of electricity required for liquefying the hydrogen (Peschka, 1992); the evaporation losses that may occur during fueling low-pressure LH_2 tanks (Wetzel, 1996); and the evaporative losses that occur during periods of inactivity, due to heat transfer from the environment.

An alternative is to store hydrogen in an insulated pressure vessel that has the capacity to operate at LH_2 temperature (20 K), and at high pressure (24.8 MPa; 3600 psi). This vessel has the flexibility of accepting LH_2 or CH_2 as a fuel. Filling the vessel with ambient-temperature CH_2 reduces the amount of hydrogen stored (and therefore the vehicle range) to about a third of its value with LH_2.

The fueling flexibility of the insulated pressure vessels results in significant advantages. Insulated pressure vessels have similar packaging characteristics as liquid hydrogen tanks (low weight and volume), with reduced energy consumption for liquefaction. Energy requirements for hydrogen liquefaction are lower than for liquid hydrogen tanks because a car with an insulated pressure vessel can use, but does not require, cryogenic hydrogen fuel. A hybrid or fuel cell vehicle with 34 km/l (80 mpg) gasoline-equivalent fuel economy could be refueled with ambient-temperature CH_2 at 24.8 MPa (3600 psi) and still achieve a 200 km range, suitable for the majority of trips. The additional energy, cost, and technological effort for cryogenic refueling need only be undertaken (and paid for) when the additional range is required for longer trips. With an insulated pressure vessel, vehicles can refuel most of the time with ambient-temperature

hydrogen, using less energy, and most likely at lower ultimate cost than LH_2, but with the capability of having 3 times the range of room-temperature storage systems. Use of compressed hydrogen in all trips under 200 km (which represent 85% of all the distance traveled in the USA, (Klinger and Kuzmyak, 1984) reduces the total energy consumption by 16% over the energy consumed by a vehicle that is always filled with LH_2.

Insulated pressure vessels also have much reduced evaporative losses compared to LH_2 tanks. This has been demonstrated in a previous work (Aceves and Berry, 1998), which presents a thorough analysis of evaporative losses in cryogenic pressure vessels based on the first law of thermodynamics. Figure 1 illustrates some of the main results. This figure shows hydrogen losses during vehicle operation. The figure assumes that two vehicles are fitted with cryogenic hydrogen storage tanks with the same capacity (5 kg). One vehicle has a low-pressure (0.5 MPa; 70 psia maximum) conventional liquid hydrogen tank, and the other has an insulated pressure vessel. The vehicles are identical in every respect, except for the tanks. The vessels are filled to full capacity with liquid hydrogen, and then the vehicles are driven a fixed distance every day. When the fuel runs out, the amount of fuel burned by the engine and the amount of fuel lost to evaporation are calculated, and the results are shown in Figure 1. The figure shows total cumulative evaporative hydrogen losses out of a full tank as a function of the daily driving distance, for a high-efficiency vehicle (34 km/l or 80 mpg gasoline equivalent fuel economy). As expected, evaporative losses increase as the daily driving distance is reduced, because less driving results in a longer time for hydrogen evaporation. The figure shows that a low-pressure LH_2 tank loses hydrogen even when driven 100 km per day. Losses from a LH_2 tank grow rapidly as the daily driving distance drops. A vehicle driven 50 km per day (the average for the USA, Aceves and Berry, 1998) loses almost 1 kg (20%) of the fuel to evaporation. On the other hand, insulated pressure vessels lose hydrogen only for very short daily driving distances (less than 5 km/day). Most vehicles are driven considerably more than this distance, so that most vehicles equipped with an insulated pressure vessel would never lose any hydrogen to evaporation.

The low losses in insulated pressure vessels are the result of the flow work (work required to extract the hydrogen from the vessel, VanWylen and Sonntag, 1978). The hydrogen stored in the vessel does work as the hydrogen is being extracted, cooling down in the process. This effect is very significant for hydrogen, due to its low molecular weight.

From an engineering and economic perspective, insulated pressure vessels strike a versatile balance between the cost and bulk of ambient-temperature CH_2 storage, and the energy efficiency, thermal insulation and evaporative losses of LH_2 storage.

Considering all the potential benefits of insulated pressure vessels, it is important to determine what type of pressure vessel could be operated at both high pressure and cryogenic temperature. Of the available pressure vessel technologies commonly used for vehicular storage of natural gas (Institute of Gas Technology, 1996), it appears that aluminum-lined, composite-wrapped vessels have the most desirable combination of properties for this application (low weight and affordable price). However, commercially available aluminum-composite pressure vessels are not designed for low temperature applications.

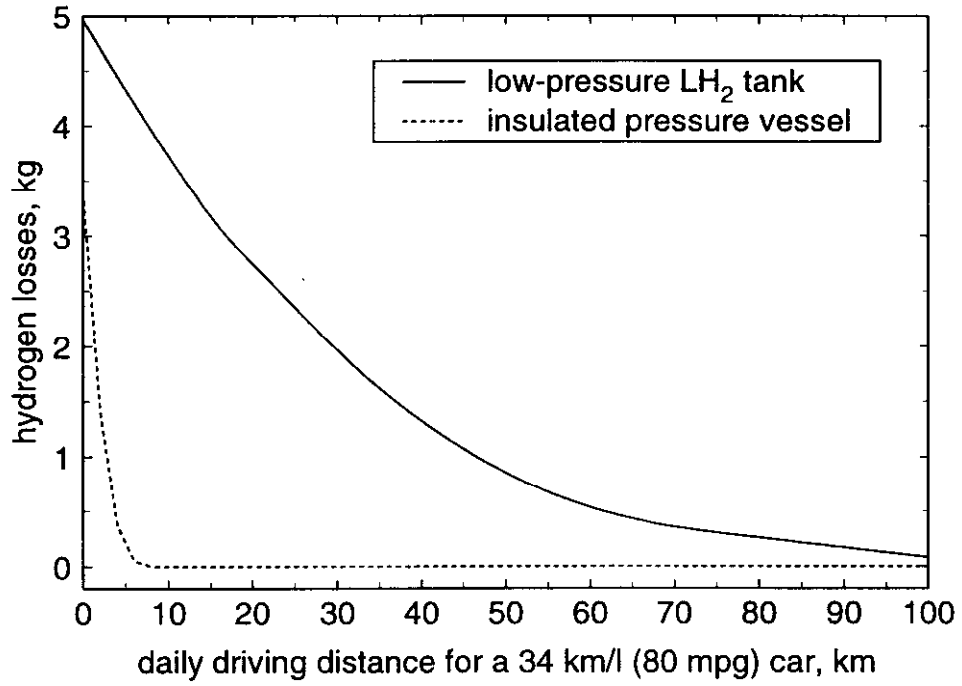

Figure 1. Cumulative hydrogen losses in kg as a function of daily driving distance, for vehicles with 17 km/liter (40 mpg); or 34 km/l (80 mpg) fuel economy, for three cryogenic hydrogen storage vessels.

This paper describes work in progress directed at evaluating the possibility of using commercially available aluminum-fiber pressure vessels at cryogenic temperatures and high pressures, as would be required for vehicular hydrogen storage in insulated pressure vessels. The paper gives a description of previous and ongoing tests, followed by a list of future tests. The purpose of these tests is to demonstrate that no technical barriers exist that prevent the use of aluminum-fiber pressure vessels at cryogenic temperatures. However, it is recognized that further tests may be necessary for certification, which is required for commercialization of insulated pressure vessels. Certification also requires subjecting several pressure vessels to the required tests, to determine the statistical significance of the results (Bauer, 1996). Obtaining vessel certification is beyond the scope of this work. It is the authors' belief that the current work will provide vessel manufacturers with an additional option for vehicular hydrogen storage. It would then be left to manufacturers to conduct the required tests to achieve certification and guarantee safety under all possible conditions. It is worth pointing out that the aluminum-fiber pressure vessels used in all these tests have been certified according to the DOT standards (CFR-

DOT, Title 49, 1996a) for storage of compressed natural gas. The current tests are being performed because these pressure vessels are being used outside their typical range of operation, and also because they are being modified to attach a vacuum insulation to them.

Previous and Ongoing Tests

Pressure and Temperature Cycling

Pressure vessels have been cycled through 900 high-pressure cycles and 100 low-temperature cycles. The cycles are alternated, running 9 pressure cycles followed by a temperature cycle, and repeating this sequence 100 times. This test is expected to replicate what would happen if these vessels were used in a hydrogen-fueled car. Liquid nitrogen is used for low-temperature cycling and gaseous helium for high-pressure cycling. To accomplish the required testing, an experimental setup has been built inside a high-pressure cell. A schematic is shown in Figure 2. The valves shown in the schematic are controlled by computer, which allows the system to run with no supervision, resulting in fast cycling. An aramid-aluminum and a carbon fiber-aluminum pressure vessel have been cycled. The characteristics of these are listed in Table 1.

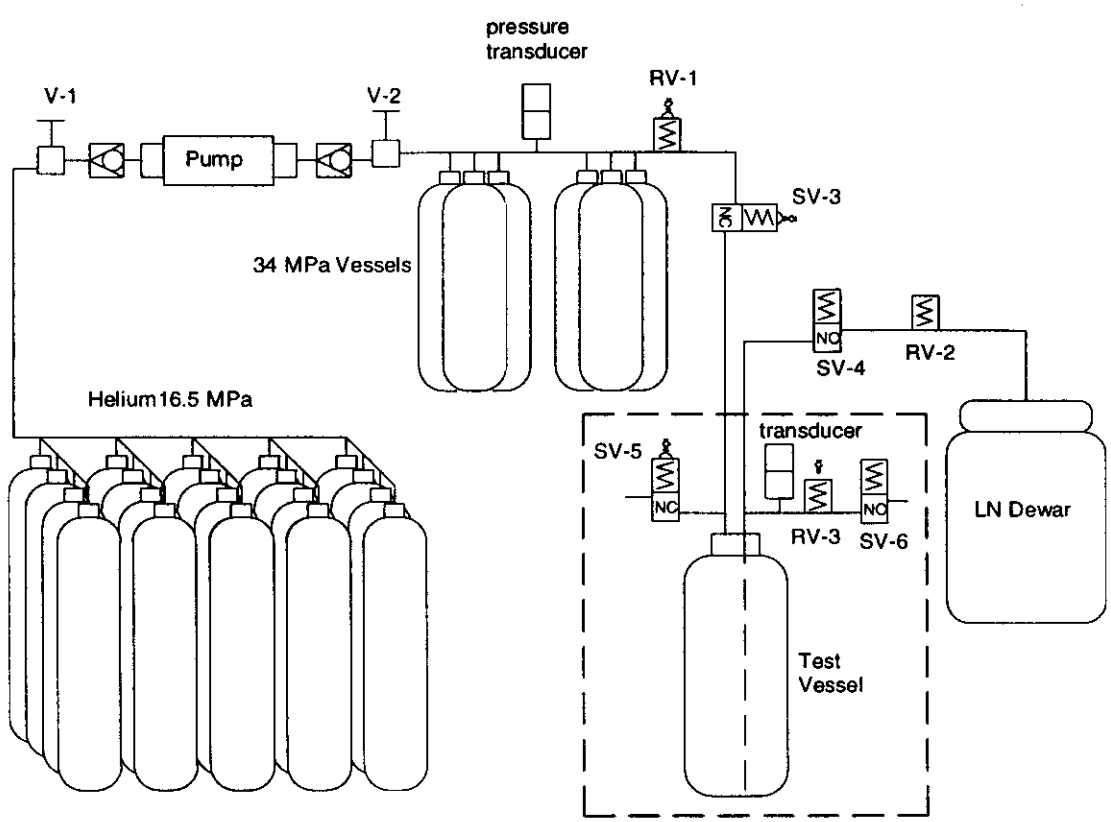

Figure 2. Schematic of the experimental setup for temperature and pressure cycling of pressure vessels.

Table 1. Characteristics of the Tested Hydrogen Vessels and Their Planned Insulation

	Aramid-Aluminum	Carbon Fiber-Aluminum
Mass of hydrogen stored, kg	1.13	0.44
Vessel weight, kg	10	4.1
Internal volume, liters	17.6	6.8
Internal diameter, m	0.2	0.17
Internal surface area, m^2	0.48	0.25
Design pressure, MPa (psi)	24.1 (3500)	31 (4500)
Performance factor[1], m (10^6in)	13000 (0.5)	13115 (0.51)
Safety factor	3.0	2.5

1 defined as burst pressure*volume/weight.

Two cyclic tests have been completed, one on an aramid-aluminum pressure vessel and other on a carbon fiber-aluminum pressure vessel. The vessels have not failed during the test, and they have not shown superficial evidence of damage under observation. The carbon fiber-aluminum vessel was instrumented with strain gages in addition to the thermocouples and pressure sensor. Results from the strain gages will be used for validating the finite element analysis.

Burst Test

The aramid-aluminum and the carbon fiber-aluminum pressure vessels were burst-tested after being cycled and ultrasound-tested. The burst test was conducted according to the Code of Federal Regulations-Department of Transportation standards for pressure vessel certification (CFR-DOT, 1996a). Figure 3 shows the variation of pressure as a function of time for the aramid-aluminum vessel. Failure occurred by hoop mid cylinder separation, which is the preferred mode of failure. The burst pressure was 94.2 MPa (13.7 ksi), which is substantially higher than the minimum burst pressure of 72.4 MPa (10.5 ksi). The very high value of the burst pressure compared to the minimum burst pressure may be due in part to work hardening that took place during the cold cycling of the vessel. The carbon fiber-aluminum also failed at a pressure higher than the minimum required.

Finite Element Analysis

Cyclic, ultrasound and burst testing of the pressure vessels is being complemented with a finite element analysis, which will help to determine the causes of any potential damage to the vessel during low temperature operation. Finite element analysis is currently in progress. A mesh has been built and preliminary runs have been made. Physical properties of fiber-epoxi laminae were obtained from available literature at ambient and cryogenic temperatures (Reed and Golda, 1994, Morgan and Allred, 1989). Lamina properties are then converted into properties of the composite matrix. This is done by using a computer program (Hull and Clyne, 1996). This program

assumes that the matrix is a homogeneous, orthotropic material. The properties of the matrix will be used in the finite element thermal and stress analysis. Results of the finite element analysis will be validated by comparison with the strain gage measurements.

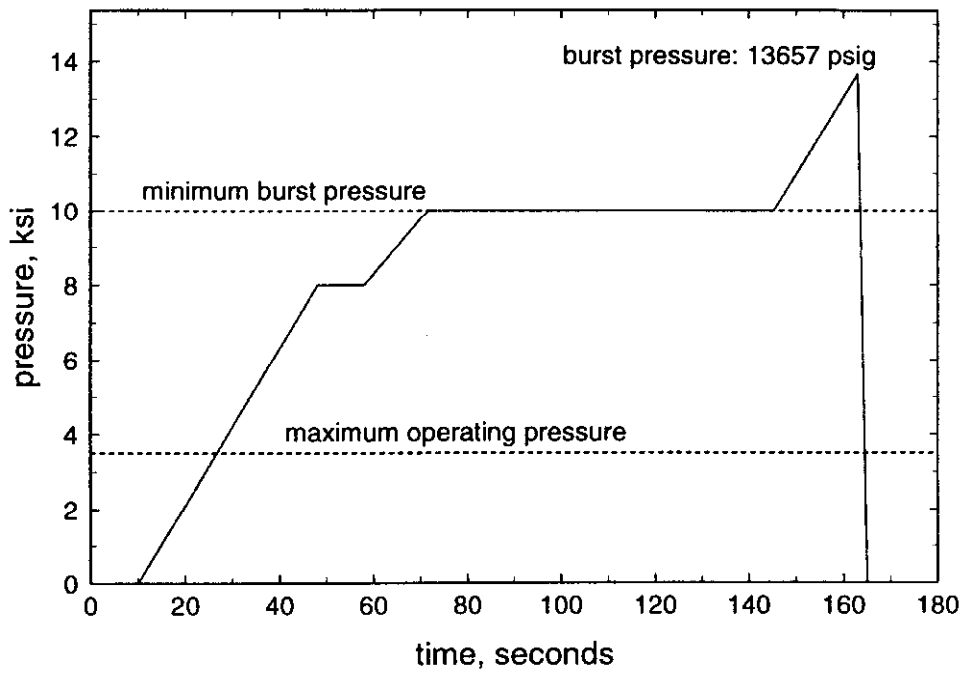

Figure 3. Pressure as a function of time during the burst test of the aluminum-lined, aramid-wrapped vessel. The burst pressure was 94.17 MPa (13657 psig).

Insulation Design and Insulated Pressure Vessel Construction

Insulated pressure vessels have been designed to operate with multilayer vacuum superinsulation (MLVSI). MLVSI has a good thermal performance only under a high vacuum, at a pressure lower than 0.01 Pa (7.5×10^{-5} mm Hg; Kaganer, 1969). Therefore, the use of MLVSI requires that an outer jacket be built around the vessel. Two designs for the insulation have been built: a first-generation design and a second-generation design. The first-generation vessel is a 1/5-scale vessel that stores about 1 kg of liquid hydrogen, and it is shown in Figure 4. This design has been built for cyclic testing and for DOT certification tests. The insulation design includes access for instrumentation for pressure, temperature and level, as well as safety devices to avoid a catastrophic failure in case the hydrogen leaks into the vacuum space. Five pressure vessels have been built according to the first-generation pressure vessel design. One of these has been extensively cycled at a high-pressure cell, and has also been tested with liquid hydrogen. The remaining 4 insulated pressure vessels have been delivered to the pressure vessel manufacturer to verify compliance with DOT standards.

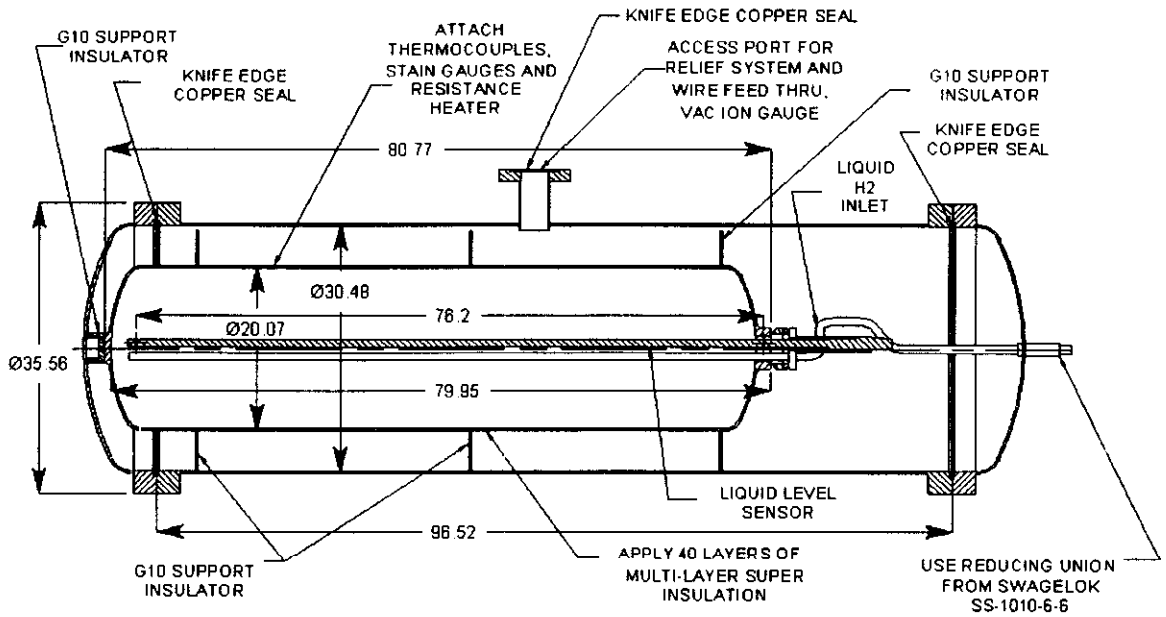

Figure 4. Insulation design for first-generation pressure vessel. The figure shows a vacuum space, for obtaining high thermal performance from the multilayer insulation, and instrumentation for pressure, temperature and level. Dimensions are given in cm.

The second-generation pressure vessel design is shown in Figure 5. This vessel can store about 6 kg of liquid hydrogen. This design includes a vapor shield to reduce evaporative losses in addition to the instrumentation and safety devices that exist in the first generation vessel. These vessels are currently being built. The second generation of pressure vessels will be used for DOT and SAE tests, and for incorporation into a demonstration vehicle.

Cyclic Testing of Insulated Pressure Vessels

The insulated pressure vessels of the first generation (Figure 4) have been cycle tested. This is done to verify that the pressure vessel or the outer jacket does not develop leaks during repeated stresses that occur during cycling. One of these first-generation pressure vessels has been subjected to 1000 cycles, following the same procedure as previously used for the pressure vessels with no insulation (see "Pressure and Temperature Cycling" above). The remaining four first-generation pressure vessels have been subjected to a cold shock and pressure test before being delivered to the vessel manufacturer for DOT testing. The experimental setup for this test is the same as previously used for cyclic testing (Figure 2). The test procedure is as follows: The vessel is pressurized with compressed helium to 1.2 times the Maximum Allowable Working Pressure (MAWP). The pressure is held for a minimum of 30 minutes. Then, the pressure vessel is shock conditioned by cycling it 3 times to low temperature with liquid nitrogen. Finally, The vessel is leak tested with helium to 0.25 times the MAWP. Any leakage detected with a mass spectrometer leak detector is unacceptable.

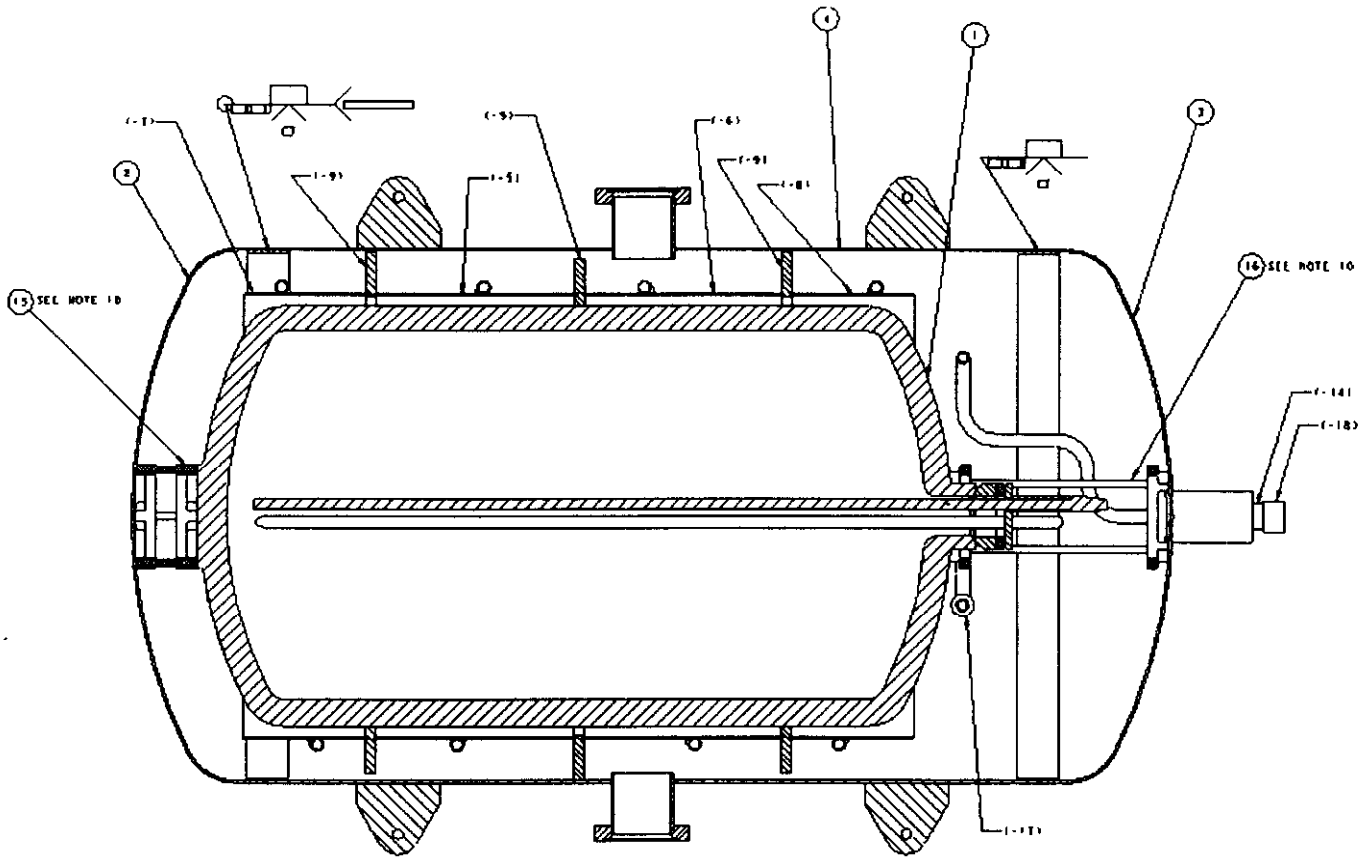

Figure 5. Insulation design for second-generation pressure vessel. The figure shows a vacuum space, for obtaining high thermal performance from the multilayer insulation, instrumentation for pressure, temperature and level, and a vapor shield for reducing hydrogen evaporative losses.

The same shock conditioning test procedure will be used for the second-generation, full-size pressure vessel before being tested according to the DOT and the SAE standards.

Liquid and Gaseous Hydrogen Testing

A first-generation insulated pressure vessel has been tested with liquid and gaseous hydrogen. The vessel was first shock-tested and leak-tested. The insulated pressure vessel was then transported to a remote facility for testing with liquid hydrogen. Testing involved filling the vessel with LH_2 to study the insulation performance, the performance of the sensors, and the problems involved with pumping the LH_2 into the vessel. This test is expected to replicate what would happen to the vessel during fueling and operation in an LH_2-fueled car. The test was conducted successfully. There was no damage to the vessel due to the low temperature operation, all the instrumentation operated properly at the low temperature, and there was no hydrogen ignition or explosions.

Future Work

Future work includes performing additional tests on insulated pressure vessels. A list of tests has been obtained from standards issued by institutions dedicated to pressure vessel and vehicular safety, including the Department of Transportation (DOT), the Society of Automotive Engineers (SAE) and the National Fire Protection Association (NFPA). These institutions have established test procedures for pressure vessels that guarantee safety under regular operating conditions. Successful completion of these tests by insulated pressure vessels will demonstrate that no significant safety problems exist with pressure vessel operation at low temperature. However, additional tests (and multiple execution of any individual test) will be still required for insulated pressure vessel certification. The list of planned tests is:

- Cycling, ambient temperature. 10000 cycles from less than 10% of the service pressure to the service pressure, 10 cycles per minute maximum (CFR-DOT, Title 49, 1996a). Each test cylinder must withstand the cycling pressurization test without any evidence of visually observable damage, distortion, or leakage.

- Cycling, environmental. 10 cycles per minute maximum. 1) 5000 cycles from zero to service pressure with tank at 60°C (140°F) and air at ambient temperature and 95% humidity, 2) 5000 cycles from zero to service pressure with tank at –51.1°C (-60°F) and air at ambient temperature, 3) 30 cycles from zero to service pressure, ambient conditions 4) burst test the cycled vessel (CFR-DOT, Title 49, 1996a). Each test cylinder must withstand the cycling pressurization test without any evidence of visually observable damage, distortion, or leakage.

- Cycling, Thermal. 10 cycles per minute maximum. 1) 10 000 cycles from zero to service pressure at ambient temperature, 2) 20 thermal cycles with tank temperature varying from 93.3°C (200°F) to –51.1°C (-60°F) at service pressure, 3) burst test the cycled vessel (CFR-DOT, Title 49, 1996a). Each test cylinder must withstand the cycling pressurization test without any evidence of visually observable damage, distortion, or leakage.

- Gunfire. Pressurize vessel with air or nitrogen to service pressure, and impact the vessel with a 0.30 caliber armor-piercing projectile with a speed of 853 m/s (2800 ft/s). The cylinder is positioned in such a way that the impact point is in the cylinder side wall at a 45° angle with respect to the longitudinal axis of the cylinder. The distance from the firing location to the cylinder may not exceed 45.7 meters (150 feet) (CFR-DOT, Title 49, 1996a). The cylinder shall not fail by fragmentation.

- Bonfire. Pressurize cylinder with air or nitrogen to service pressure. Set pressure relief devices to discharge at 83% of the cylinder test pressure. The cylinder shall be exposed to fire until the gas is fully vented. The temperature measured on the surface tank exposed to the fire has to be between 850 and 900°C (CFR-DOT, Title 49, 1996a). The venting of the gas must be predominantly through the pressure relief device.

- Drop Test from 3 m (10 ft). 1) The cylinder is dropped vertically onto the end, 2) the cylinder is dropped horizontally onto the side wall, 3) the cylinder is dropped onto a 3.8 x 0.48 cm (1 ½ x 3/16 inch) piece of angle iron, 4) after the drops, the vessel is cycled over 1000 pressure cycles from 10% of service pressure to the service pressure, at 10 cycles per minute (CFR-DOT, Title 49, 1996). The cylinder then has to be burst tested; the burst pressure of this vessel has to be at least 90 % of the minimum burst pressure.

- Drop tests from 10 m and 3 m. 1) Drop from 10 m. The drop test subjects a full-size vehicle fuel tank to a free-fall impact onto an unyielding surface from a height of 10 m. The fuel tank is released by firing one or more explosive cable cutters simultaneously. The fuel tank impacts the outer shell on the critical area as determined by the manufacturer. The fuel tank is filled with an equivalent full weight of liquid nitrogen saturated to at least 50% of the maximum allowable working pressure of the fuel tank. 2) Drop from 3 m. The drop test subjects a full-size vehicle fuel tank to a free-fall impact onto an unyielding surface from a height of 3 m. The fuel tank is released by firing one or more explosive cable cutters simultaneously. The fuel tank impacts the outer shell on the critical area as determined by the manufacturer. The fuel tank is filled with an equivalent full weight of liquid nitrogen saturated to at least 50% of the maximum allowable working pressure of the fuel tank (SAE J2343, 1997). There shall be no loss of product for a period of 1 hour after the drop other than relief valve operation and loss of vapor between the filler neck and the secondary relief valve in the case of a test involving the filler neck. Loss of vacuum, denting of the vessel, piping and piping protection, and damage to the support system are acceptable.

- Flame test. The tank should contain an equivalent full level of liquid nitrogen saturated at one half the maximum allowable working pressure (MAWP). The tank should be inverted and subjected to an external temperature of 538°C (1000°F) for 20 minutes without the vessel reaching relief pressure (SAE J2343, 1997).

Insulated pressure vessels for the first four tests have already been delivered to the vessel manufacturer. These will be tested shortly. Additional plans include the installation of insulated pressure vessels into demonstration hydrogen-powered vehicles. For this application, the NFPA (NFPA 57, 1996; NFPA 52, 1998), and CFR-DOT (Title 49, 1996) standards will be reviewed to prepare the required tests to guarantee the safety of the operation. Future work will also focus on developing a testing procedure for achieving certification of insulated pressure vessels.

Conclusions

Insulated pressure vessels are being developed as an alternative technology for storage of hydrogen in light-duty vehicles. Insulated pressure vessels can be fueled with either liquid hydrogen or compressed hydrogen. This flexibility results in advantages compared to conventional hydrogen storage technologies. Insulated pressure vessels are lighter than hydrides, more compact than ambient-temperature pressure vessels, and require less energy for liquefaction and have less evaporative losses than liquid hydrogen tanks.

For reduced cost and complexity it is desirable to use commercially available aluminum-fiber pressure vessels for insulated pressure vessels. However, commercially available pressure vessels are not designed for operation at cryogenic temperature. A series of tests has been carried out to verify that commercially available pressure vessels can be operated at cryogenic temperature with no performance losses. All analysis and experiments to date indicate that no significant damage has resulted. Required future tests are described that will establish that no significant safety issues exist with pressure vessel operation at cryogenic temperature.

Acknowledgments

This project is funded by the DOE Hydrogen Program, Sig Gronich and Neil Rossmeisl, Program Managers. The authors also express their appreciation for the significant contributions of Structural Composites Industries (SCI) to this project. Work performed under the auspices of the U.S. Department of Energy by Lawrence Livermore National Laboratory under Contract W-7405-ENG-48.

References

Aceves, S. M., Berry, G.D., 1998, "Thermodynamics of Insulated Pressure Vessels for Vehicular Hydrogen Storage," ASME Journal of Energy Resources Technology, June, Vol. 120, pp. 137 142.

Baur L., 1995, "Composite Pressure Vessel with Metal Liner for Compressed Hydrogen Storage," Proceedings of the 1st IEA Workshop on Fuel Processing for Polymer Electrolyte Fuel Cells, Paul Scherrer Institut, Villigen, Switzerland, International Energy Agency, Swiss Federal Office of Energy, September 25-27, 1995, p. 45-69.

Braess, H.H., and Strobl, W., 1996, "Hydrogen as a Fuel for Road Transport of the Future: Possibilities and Prerequisites," Proceedings of the 11th World Hydrogen Energy Conference, Stuttgart, Germany.

Code of Federal Regulations, Department of Transportation (CFR-DOT), 1996a, "Basic Requirements for Fully Wrapped Fiber Reinforced Aluminum Lined Cylinders," Title 49, CFR 107.105 Standard.

Hettinger, W. Michel, F., Ott, P., and Theissen, F., 1996, "Refueling Equipment for Liquid Hydrogen Vehicles," Proceedings of the 11th World Hydrogen Energy Conference, Stuttgart, Germany, pp. 1135-1143.

Hull, D., and Clyne, T.W., 1996, "An Introduction to Composite Materials," Cambrige University Press, Cambridge, Great Britain.

Institute of Gas Technology, 1996, "Compressed Natural Gas Storage Optimization for Natural Gas Vehicles," Gas Research Institute Report GRI-96/0364, Des Plaines, IL.

Kaganer, M.G., 1969, "Thermal Insulation in Cryogenic Engineering," Israel Program for Scientific Translation Ltd., Jerusalem, Israel.

Klinger, D., Kuzmyak JR., 1984, "Personal Travel in the United States," Vol. 1, 1983-1984, Nationwide Personal Transportation Study, Report PB89-235378, prepared for the US Department of Transportation, Office of Highway Information Management, Washington, DC.

Michel, F., Fieseler, H., Meyer, G., and Theissen, F., 1996, "Onboard Equipment for Liquid Hydrogen Vehicles," Proceedings of the 11th World Hydrogen Energy Conference, Stuttgart, Germany, pp. 1063-1077.

Morgan, R.J. and Allred, R.E., 1989, "Aramid fiber reinforcements," in "Reference Book for Composite Technology," Edited by Lee, S.M., pp. 143-166, Technomic Publishing, Lancaster, PA.

National Fire Protection Association (NFPA), 1998, "NFPA 52: Compressed Natural Gas (CNG) Vehicular Fuel System Code," Quincy, MA.

National Fire Protection Association (NFPA), 1996, "NFPA 57: Liquefied Natural Gas (LNG) Vehicular Fuel System Code," Quincy, MA.

Pehr, K., 1996a, "Experimental Examinations on the Worst Case Behavior of LH_2/LNG Tanks for Passenger Cars," Proceedings of the 11th World Hydrogen Energy Conference, Stuttgart, Germany.

Pehr, K., 1996b, "Aspects of Safety and Acceptance of LH_2 Tank Systems in Passenger Cars," International Journal of Hydrogen Energy, Vol. 21, pp. 387-395.

Pentastar Electronics, 1997, "Direct-Hydrogen-Fueled Proton-Exchange-Membrane Fuel Cell System for Transportation Applications, Conceptual Design Report," Report DOE/CE/50390-9, prepared for U.S. Department of Energy, Office of Transportation Technologies, under contract DE-AC02-94CE50390.

Peschka, W., 1992, "Liquid Hydrogen, Fuel of the Future," Springer-Verlag, Vienna, Austria.

Reed, R.P., and Golda, M., 1994, "Cryogenic Properties of Unidirectional Composites," Cryogenics, Vol. 34, No. 11, pp. 909-928.

Society of Automotive Engineers (SAE), 1997, "Recommended Practices for LNG Powered Heavy-Duty Trucks," SAE.J2343.

Wetzel, F.J., 1996, "Handling of Liquid Hydrogen at Filling Stations," Proceedings of the 11th World Hydrogen Energy Conference, Stuttgart, Germany, pp. 1123-1134.

Figure Captions

Figure 1. Cumulative hydrogen losses in kg as a function of daily driving distance, for vehicles with 17 km/liter (40 mpg); or 34 km/l (80 mpg) fuel economy, for three cryogenic hydrogen storage vessels.

Figure 2. Schematic of the experimental setup for temperature and pressure cycling of pressure vessels.

Figure 3. Pressure as a function of time during the burst test of the aluminum-lined, aramid-wrapped vessel. The burst pressure was 94.17 MPa (13657 psig).

Figure 4. Insulation design for pressure vessel. The figure shows a vacuum space, for obtaining high thermal performance from the multilayer insulation, and instrumentation for pressure, temperature and level. Dimensions are given in cm.

Figure 5. Insulation design for second-generation pressure vessel. The figure shows a vacuum space, for obtaining high thermal performance from the multilayer insulation, instrumentation for pressure, temperature and level, and a vapor shield for reducing hydrogen evaporative losses.