Preprint
UCRL-JC-144351

Test Results for a Reciprocating Pump Powered by Decomposed Hydrogen Peroxide

J. C. Whitehead

This article was submitted to
37th American Institute of Aeronautics and Astronautics/American Society of Mechanical Engineers/Society of Automotive Engineers/American Society of Engineering Education Joint Propulsion Conference and Exhibit
Salt Lake City, UT
July 8-11, 2001

U.S. Department of Energy
Lawrence Livermore National Laboratory

June 13, 2001

Approved for public release; further dissemination unlimited

DISCLAIMER

This document was prepared as an account of work sponsored by an agency of the United States Government. Neither the United States Government nor the University of California nor any of their employees, makes any warranty, express or implied, or assumes any legal liability or responsibility for the accuracy, completeness, or usefulness of any information, apparatus, product, or process disclosed, or represents that its use would not infringe privately owned rights. Reference herein to any specific commercial product, process, or service by trade name, trademark, manufacturer, or otherwise, does not necessarily constitute or imply its endorsement, recommendation, or favoring by the United States Government or the University of California. The views and opinions of authors expressed herein do not necessarily state or reflect those of the United States Government or the University of California, and shall not be used for advertising or product endorsement purposes.

This is a preprint of a paper intended for publication in a journal or proceedings. Since changes may be made before publication, this preprint is made available with the understanding that it will not be cited or reproduced without the permission of the author.

This report has been reproduced
directly from the best available copy.

Available to DOE and DOE contractors from the
Office of Scientific and Technical Information
P.O. Box 62, Oak Ridge, TN 37831
Prices available from (423) 576-8401
http://apollo.osti.gov/bridge/

Available to the public from the
National Technical Information Service
U.S. Department of Commerce
5285 Port Royal Rd.,
Springfield, VA 22161
http://www.ntis.gov/

OR

Lawrence Livermore National Laboratory
Technical Information Department's Digital Library
http://www.llnl.gov/tid/Library.html

TEST RESULTS FOR A RECIPROCATING PUMP POWERED BY DECOMPOSED HYDROGEN PEROXIDE

John C. Whitehead*
Lawrence Livermore National Laboratory
Livermore, CA 94551

Abstract

A four-chamber piston pump has been tested in several evolving configurations. A significant improvement over an earlier hydrazine pump is the elimination of warm gas leakage in the powerhead. This has been achieved through the used of soft seals for the power piston and intake-exhaust valves, with gas temperatures approaching 800 K (980 F). The pumped fluid serves as a coolant, and the cylinder walls and heads are made of aluminum for high thermal conductivity, low mass, and affordability.

Introduction

This paper is an interim progress report toward pump-fed rocket propulsion on a small scale, or what amounts to miniaturized launch propulsion technology. Potential applications include small upper stages, maneuvering vehicles, lunar landing and liftoff, and Mars ascent.[1] As on launch vehicle liquid stages, the underlying principle is the use of low-pressure lightweight tanks and compact high pressure thrust chambers to reduce total system hardware mass and improve packaging. Absent, for example, are the gas vessels typical of pressure-fed spacecraft systems.

Figure 1 shows a simplified schematic. This can be implemented with any monopropellant, given appropriate material choices including decomposition catalyst in the gas generator. More generally, Fig. 1 is effectively half of a bipropellant system. A key requirement for a gas generator cycle system is that the pump must deliver liquid at a pressure higher than its drive gas. The resulting potential for boundless pressure amplification is controlled here by the regulator in series with the gas generator.

While most of the propellant is pumped directly to one or more thrust chambers, a small fraction of it performs the pumping work. Ideally, this is done at a high gas temperature, since a lower density reduces the amount of propellant required. A key challenge in pump design is to increase temperature while avoiding excesses in mass, size, cost, gas leakage, etc. As shown in Fig. 1, the gas may be cooled by a heat exchanger if necessary.

*Senior Member, AIAA
Copyright © 2001 by the Lawrence Livermore National Laboratory. Published by the American Institute of Aeronautics and Astronautics, Inc. with permission. This work was performed under contract W-7405-Eng-48 with the U.S. DoE.

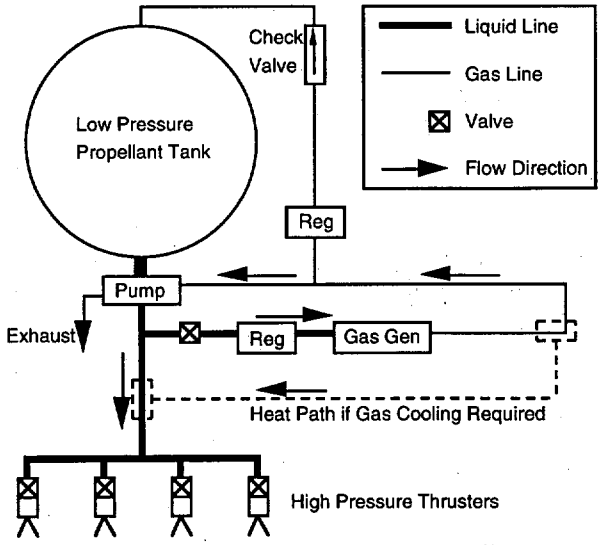

Figure 1. Pump Fed Schematic for Monopropellant.

Hydrazine Pump (1988-1993)

Beginning in 1988, a high pressure hydrazine pump was developed at LLNL for advanced technology programs. This was ultimately flight-tested in a four-chamber configuration, shown in Figure 2.[2]

A key design driver was a concern of overheating the hydrazine being pumped. This led to deliberate thermal isolation of the power cylinder from the pump cylinder. The uncooled power cylinder was given solid graphite piston rings, and the resulting leakage meant a continuous heat flux to the pump even when no liquid was flowing. Ironically, this result of the overheating concern in turn justified the concern!

In Fig. 2, four working cylinder assemblies are bolted to a central liquid manifold block which contains inlet and outlet check valves. This arrangement lowers liquid pressure losses as well as mass. At any time, two cylinders are pressurized for propellant delivery, while the others refill from the tank. Opposite pistons stroke toward each other, which cancels net mass shifts to greatly reduce vibration. There is no external control, as the gas intake-exhaust valves are synchronized pneumatically.[3] Piston speed and switching frequency can vary all the way down to zero, at full pressure. Actual flow depends entirely on thrust chamber valve actuation, just as in a pressure fed system.

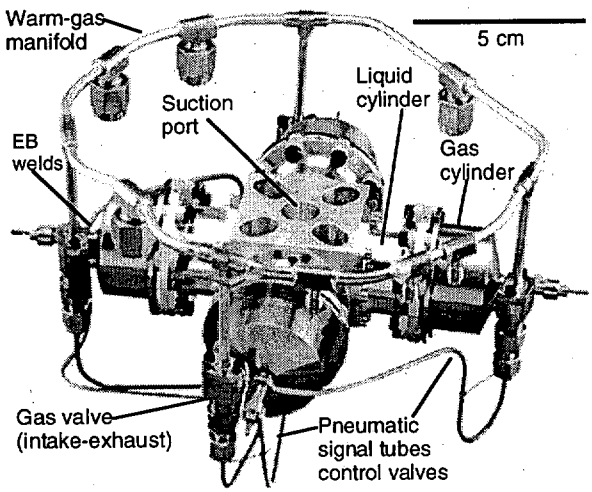

Figure 2. Four Chamber Hydrazine Pump Tested in 1993.

Table 1 indicates sizing and performance for the hardware pictured. The 365 gram assembly delivered its own mass in liquid each second above 6.2 MPa (900 psi), from a tank at 0.35 MPa (50 psi). This flow of hydrazine supports vacuum thrust 230 times the pump's earth weight. As in any launch vehicle engine, the pump is far lighter than the weight savings in tanks and thrust chambers.

For operation in a gas generator cycle, a key performance parameter is the pressure ratio of the liquid discharge to the driving gas. This boost ratio falls in the graph as flow rises. Boost is reduced by pressure losses in passageways

Table 1. Characteristics of the Quad Piston Pump.

Sizing Information

Mass As Tested	365 grams
Liquid Cylinder Bore	25.4 mm (1.000 in)
Gas Cylinder Bore	31.75 mm (1.250 in)
Piston Area Ratio	1.56
Max Piston Travel	12.8 mm (.504 in)
Ideal Liq Displacement	6.5 cc x 4 cylinders = 26 cc per cycle

Bench Test Results

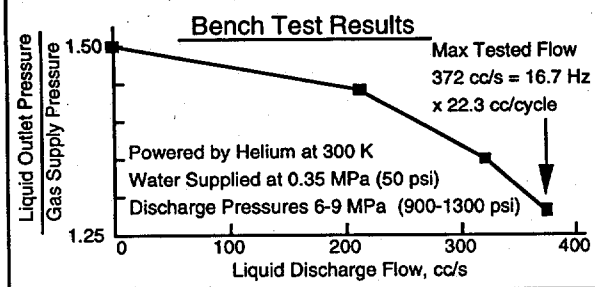

Tests with Hydrazine

Pump Fed Engine Static Test, 520 N Thrust at Sea Level
Pump Fed Engine Flight Test, 250-260 cc/s for 37 s Duration
Half Quad Life Test, Warm Gas & Water, >1500 cycles

during the power stroke, particularly the liquid discharge check valves and the gas intake. Even the static boost ratio (1.50) was below the piston area ratio (1.56), because gas leakage caused intake flow.

Maximum flow equals the liquid cylinders' rate of refill. This depends on tank pressure, sizing of the liquid inlet check valves, and gas exhaust restrictiveness. Hence, the gas valves in Figure 2 vent directly to ambient with no exhaust manifold.

The greatest technical challenge to perfecting a highly reliable system was the need for dynamic warm gas seals on the pump pistons and in the intake-exhaust valves. Solid graphite seals were used near 1000 K and simply allowed to leak even more gas than was needed for pump power. Reducing leakage not only reduces consumption, it shifts the pressure boost curve upwards.

Liquid Cooled Two-Cylinder Pump (1998)

During a multi-year funding hiatus, design concepts for the intake-exhaust valves were refined using a series of plastic prototypes. Fluoroelastomer valve seats leaked so little that it was tempting to run them at elevated temperatures. Aluminum became the material of choice for the powerhead, since it can conduct heat away from the seals.

This approach was first tried on a low-performance pump, designed for a self-pressurizing system.[4] Figure 3 shows this two-cylinder pump, which delivered roughly 3 g/s of hydrogen peroxide at ~3 MPa (>400 psi), while being powered by 700 K (800 F) gas. Under such conditions in a steady 5-minute test, the aluminum housing containing the gas valves reached only about 370 K (200 F).

Reliable operation was demonstrated on numerous occasions without gas leakage, and without refurbishment. While the power to weight ratio was very low, the thermal

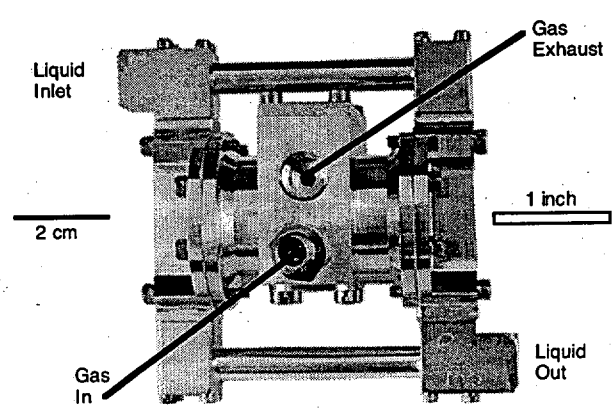

Figure 3. Aluminum 2-cylinder HTP pump (220 grams).

results were sufficiently cool to warrant testing a higher flow pump with soft seals, and aluminum parts to conduct heat to the pumped liquid.

Non-Boosting Quad Pump (1999-2000)

A clean-sheet quad pump design was started in 1999. Unlike the bolt-on cylinders in Fig. 2, the liquid cylinders and the check valve block are machined as one piece. This part, shown in Figure 4, is very compact and less complicated by virtue of eliminating bolt patterns, seals, and cylinder flanges. The 12.7 mm (0.50 inch) diameter suction port is at the center.

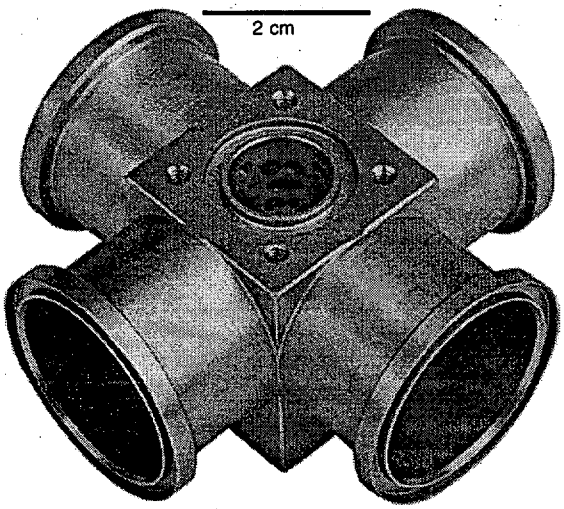

Figure 4. One-piece liquid block and cylinders (62 grams).

Powering an aluminum pump with gas approaching the metal's melting temperature was considered to be a major uncertainty. Primarily for this reason, a risk managed approach was pursued beginning in 1999. As in Figure 5, thin, flat pistons separated gas and liquid in shared cylinders, so that the "gas cylinder" walls and piston seals

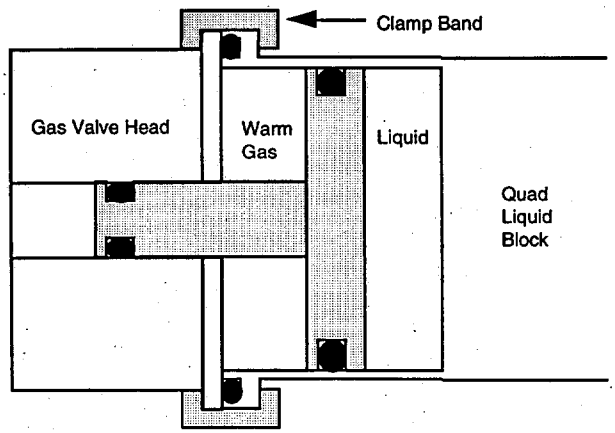

Figure 5. Cylinder cross section for non-boosting quad.

would be directly cooled by the pumped liquid. This configuration also has a short thermal path between the gas valves and the liquid coolant, and is very compact overall.

In Figure 6, the gas valve heads are attached directly to the cylinders of Figure 4. Obviously, the liquid discharge pressure is below that of the drive gas in this configuration. In order to use such a non-boosting pump in a propulsion system, it needs a separate gas source or a small helper pump (e.g. Fig. 3) to feed a gas generator from a common propellant tank. This approach requires additional system complexity, but potentially offers more packaging options.

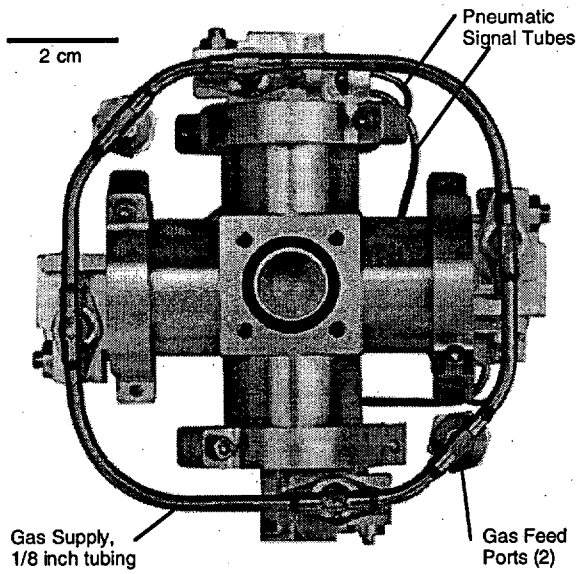

Figure 6. Non-boosting quad piston pump (305 grams).

In addition to the one-piece block and liquid cooling, another major difference from the 1993 hydrazine pump is the absence of intricate welded titanium assemblies. In Figure 6, the gas intake-exhaust valve bores are machined into the heads. The exhaust ports accept header flanges.

The non-boosting quad pump was first tested in late 1999. Various problems were diagnosed over the course of a year of bench testing, and improvements were implemented. The pumped fluid was water from a tank held at 0.35 MPa (50 psi). Typically, the pump was powered by helium after a hardware change, then decomposed 85% HTP was used. Metal temperatures were below 422 K (300 F).

One interesting problem is that the discharge pressure with warm gas drive was initially much lower than would be expected from the helium results. It was speculated that the piston seal friction increased with heating. However, high speed pressure data showed dropouts in the discharge pressure, which were responsible for reducing the average pressure. The pistons were bottoming out before the

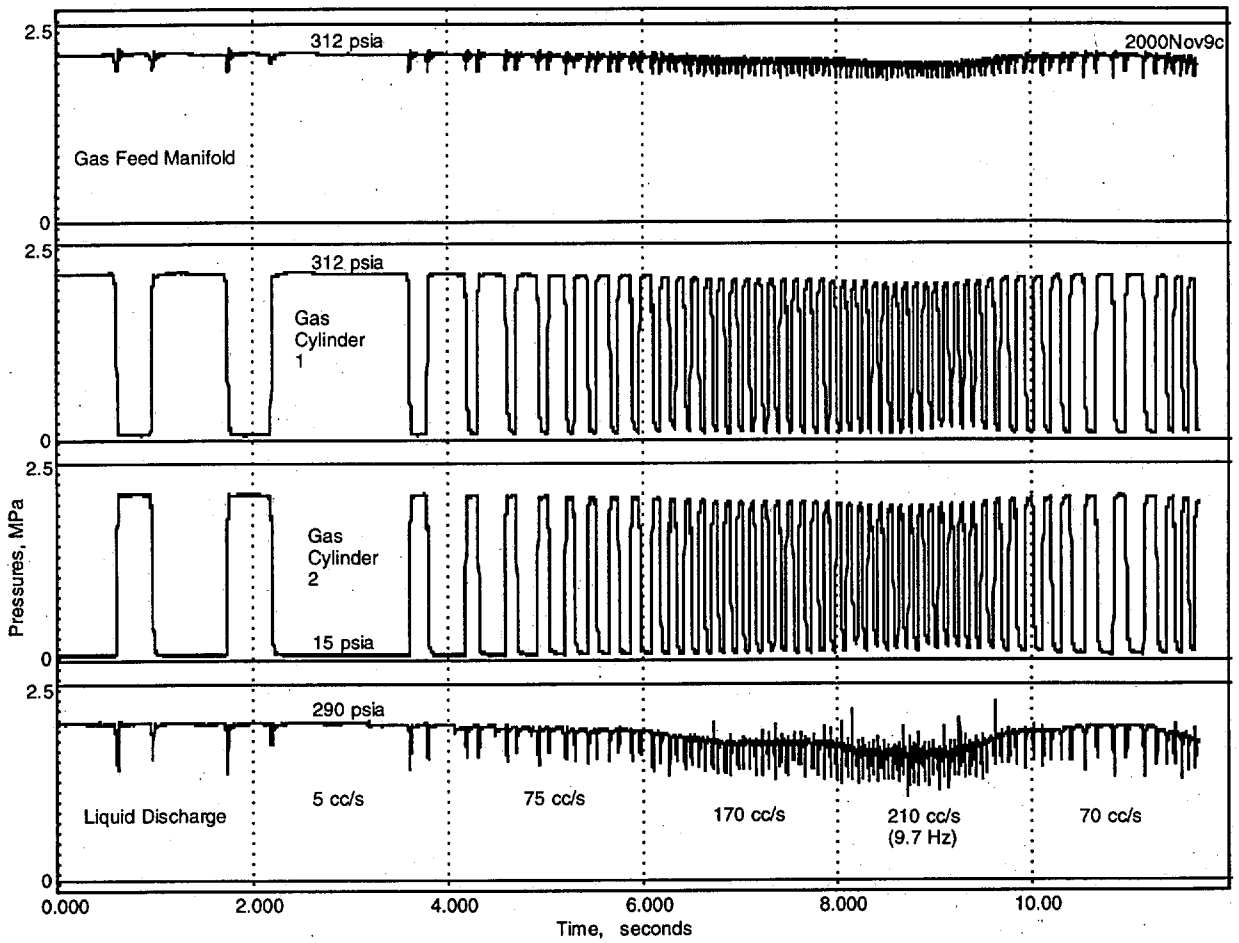

Figure 7. Throttle response of the non-boosting quad piston pump. Frequency tracks flow, as determined by demand.

adjacent cylinders started pumping. Helium drive resulted in small pressure dips rather than dropouts, so it became apparent that the intake-exhaust valves were switching too slowly with HTP drive. This is most likely due to the higher fluid density (and possibly liquid water) in the pneumatic signal tubes that control the intake-exhaust valves. A timing advance solved the problem.

A key feature of reciprocating pumps (without rotating inertia) is that flow can change rapidly to feed whatever thrusters are turned on. In Fig. 7, a manual discharge valve was adjusted to simulate demand from a throttleable thrust chamber. Liquid flow varied as indicated.

In this test, decomposed 85% hydrogen peroxide was fed to both opposite ports of the circular tube manifold in Figure 6. The gas feed transducer and an immersion thermocouple were connected close to one of the ports. Each time the intake-exhaust gas valves switch, there is a pulse of extra flow, which causes the gas feed pressure dips. The liquid pressure falls to 85% of its value for about 10 ms.

In this particular test, the gas supply thermocouple reached 690 K (781 F). A thermocouple on a gas valve head indicated a maximum of 420 K (297 F). This is well within the short term capability of aluminum alloys. In another similar test at a steady flow, the quantity of HTP required to drive the pump was under 2% of the pumped amount at 300 psi.

Boost Kit Quad Pump (2001)

Given the promising temperature data above, the next step was to test a boosting quad pump. Ideally, the gas cylinders and their heads would be larger than the liquid cylinders. However, the heads and valves in particular are relatively complicated and time-consuming to fabricate. A lower cost approach was conceived, as shown in Figure 8.

Essentially, a "boost kit" retrofit was devised, so that the existing liquid block and existing gas heads could be used. The new gas cylinders had to be the same diameter as the existing liquid cylinders to use the old heads. These parts

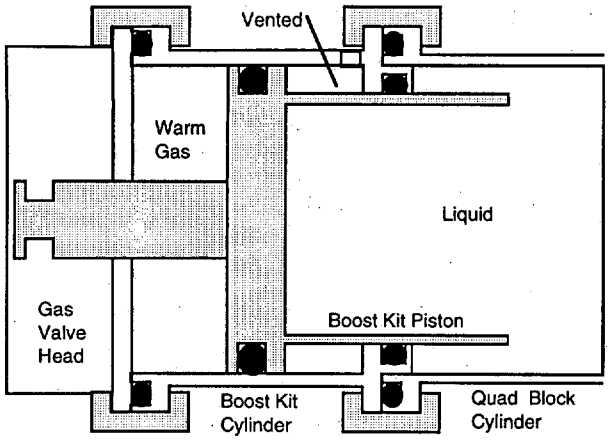

Figure 8. Cylinder cross section of boost kit.

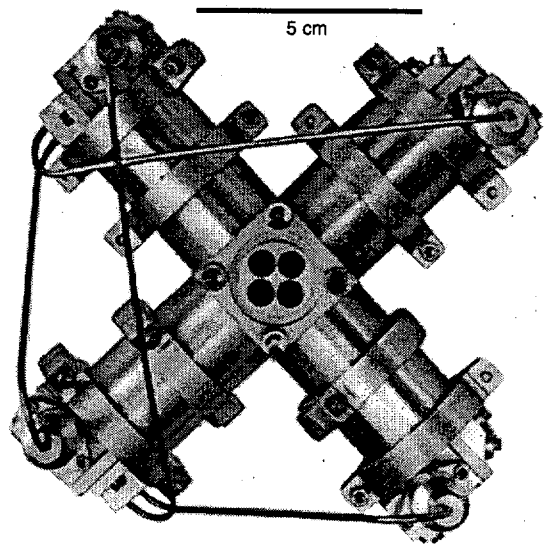

Figure 9. Quad piston pump with boost kits (350 grams).

and new differential-area pistons were installed using existing spare clamp bands. The drawback of this approach is that the effective working diameter and volume displacement of the liquid cylinders were reduced internally. A preferred pressure boost ratio (~1.5) was compromised to 1.4 in order to not cut the liquid displacement further. In addition, there is the unnecessary mass of extra seals and clamps in the complicated joints.

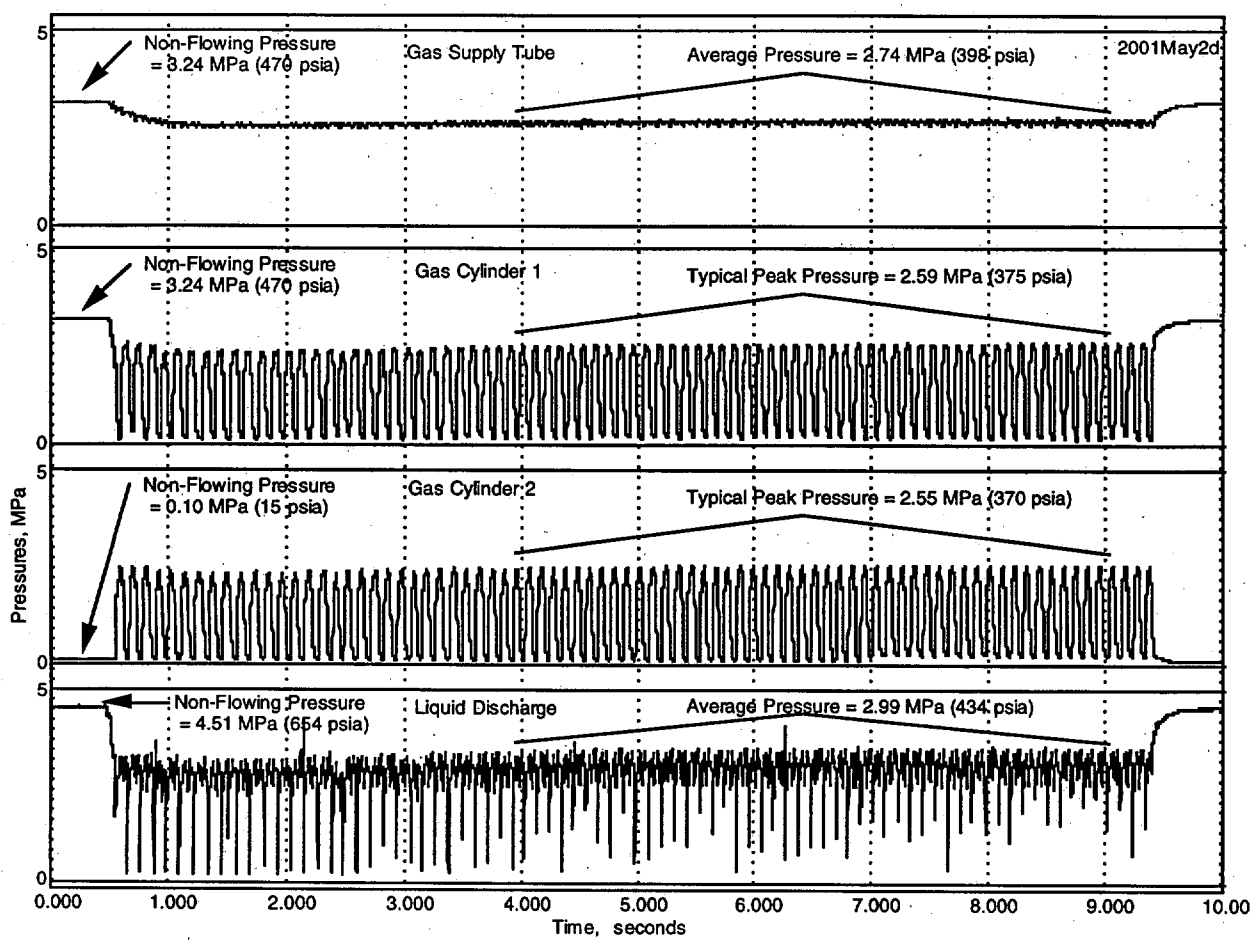

Figure 10. Boost kit quad pump pressures at 144 cc/s water flow, powered by decomposed 85% HTP.

As a functional test article, however, the "boost kit quad pump" has the essential feature. Compared to Fig. 5, Fig. 8 shows a far longer thermal path between the gas valves and the coolant (pumped liquid).

Figure 9 shows the assembly viewed from the discharge face of the quad block, which has four individual ports for the check valves. Note that the pneumatic signal tubes are not symmetrical. Each of the gas heads on the left sends a pressure signal to both of its adjacent gas valves. The mass of the hardware pictured is 350 grams. This does not include the gas supply manifold, which will have larger tubes than those in Figure 6.

As of this writing, only a preliminary test series has been conducted with the "boost kit" quad pump. Restrictive gas supply tubes were assembled with heavy fittings, as the lightweight brazed version is not yet available. Figure 10 shows results for the highest flow and highest pressure test attempted to date. As before, the pump was bench tested with water as the pumped fluid, and powered by decomposed 85% hydrogen peroxide. The frequency is 9.4 Hz (37.6 cylinder displacements per second) at an average flow of 144 cc/s. As labeled pressure levels indicate, the discharge pressure exceeded that of the drive gas.

There are high-amplitude pressure dips in the liquid discharge, but the gas supply trace is much smoother than before. The restrictive gas supply tubes were between the transducer and the pump. It is most likely true that there were large switching dips in the actual pressure at the gas head intake ports. Therefore, the new gas supply manifold with larger tubes is expected to greatly smooth out the pump discharge pressure.

As before, an immersion thermocouple was placed in the gas generator line, just before the pump manifold. Two additional thermocouples on one gas cylinder wall and its associated head were wrapped with several layers of woven fiberglass to minimize convective losses. Temperatures for the test of Fig. 10 are plotted in Figure 11. These preliminary thermal results are surprisingly encouraging. Once again, a potentially risky thermal design philosophy seems to be workable.

Note that the gas head temperature continued to rise after the discharge valve was shut at t=9.4 s to stop the test. The head is much thicker than the cylinder wall, so there is clearly heat soakback from the inside of the head which ran somewhat hotter. How much hotter remains unknown, but there is still a 100 K margin to a reasonable design condition for short term operation of aluminum alloys.

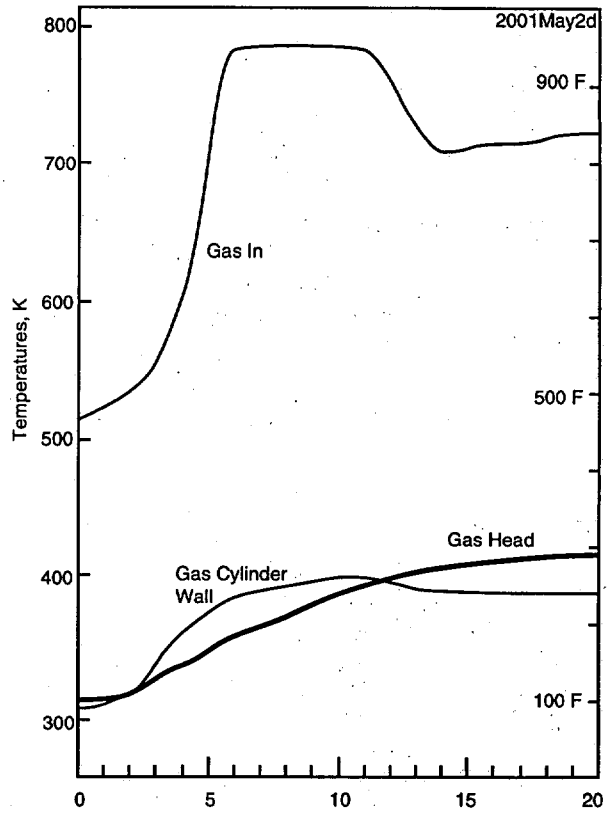

Figure 11. Temperatures during test run of Figure 10.

Conduction calculations can easily be done, but the thermal loading is complicated. Steam condenses on the cylinder walls, and local evaporative cooling probably occurs as each exhaust pulse is released. Exhaust gas temperature measurements will be attempted in the future.

Discussion

The overall boost ratio actually achieved in Fig. 10 has little margin to accommodate gas generator pressure drops in the schematic of Fig.1. Nevertheless, it is planned to test the boost kit quad pump in a complete system at moderate thrust. The less restrictive gas supply manifold will help some. Improved outlet check valves are also being considered. Subsequently, a larger piston area ratio is most likely needed in a new design having gas cylinders larger than the liquid cylinders.

A long term goal has been to duplicate the power-to-weight ratio performance of the 1993 hydrazine pump, while eliminating warm gas leakage and simplifying the design to reduce cost. Ongoing experimentation has resulted in significant progress toward that end.

Given appropriate material choices, similar pumps will work with other propellants. For example, there is every reason

to believe that a liquid cooling approach can be used to pump hydrazine with its own decomposition products without the high gas leakage experienced previously. As noted in Ref. 1, some pre-cooling of the gas may be required.

Acknowledgment

This work was sponsored by the U.S. Government and performed by the University of California Lawrence Livermore National Laboratory under Contract W-7405-Eng-48 with the U.S. Dept. of Energy.

References

1. Whitehead, J.C. & G.T. Brewster, High Pressure Pumped Hydrazine for Mars Sample Return, Journal of Spacecraft and Rockets, Vol. 37. No. 4, pp. 532-538, July 2000.

2. Whitehead, J.C., L.C. Pittenger, N.J. Colella, Design and Flight Testing of a Reciprocating Pump Fed Rocket, AIAA 94-3031, 1994.

3. Maybee, J.C., D.G. Swink, J.C. Whitehead, Updated Test Results of a Pumped Monopropellant Propulsion System, JANNAF Propulsion Meeting Proceedings, CPIA Pub. 602 Vol. 1, p. 131, November 1993.

4. Whitehead, J.C., Self Pressurizing HTP Feed Systems, Second International Hydrogen Peroxide Propulsion Conference, Purdue University, West Lafayette Indiana, Nov 7-10 1999.