UCRL-ID-144797

Bromine Safety

B. Myers

April 9, 2001

U.S. Department of Energy

Lawrence
Livermore
National
Laboratory

Approved for public release; further dissemination unlimited

DISCLAIMER

This document was prepared as an account of work sponsored by an agency of the United States Government. Neither the United States Government nor the University of California nor any of their employees, makes any warranty, express or implied, or assumes any legal liability or responsibility for the accuracy, completeness, or usefulness of any information, apparatus, product, or process disclosed, or represents that its use would not infringe privately owned rights. Reference herein to any specific commercial product, process, or service by trade name, trademark, manufacturer, or otherwise, does not necessarily constitute or imply its endorsement, recommendation, or favoring by the United States Government or the University of California. The views and opinions of authors expressed herein do not necessarily state or reflect those of the United States Government or the University of California, and shall not be used for advertising or product endorsement purposes.

This work was performed under the auspices of the U. S. Department of Energy by the University of California, Lawrence Livermore National Laboratory under Contract No. W-7405-Eng-48.

This report has been reproduced directly from the best available copy.

Available electronically at http://www.doc.gov/bridge

Available for a processing fee to U.S. Department of Energy
And its contractors in paper from
U.S. Department of Energy
Office of Scientific and Technical Information
P.O. Box 62
Oak Ridge, TN 37831-0062
Telephone: (865) 576-8401
Facsimile: (865) 576-5728
E-mail: reports@adonis.osti.gov

Available for the sale to the public from
U.S. Department of Commerce
National Technical Information Service
5285 Port Royal Road
Springfield, VA 22161
Telephone: (800) 553-6847
Facsimile: (703) 605-6900
E-mail: orders@ntis.fedworld.gov
Online ordering: http://www.ntis.gov/ordering.htm

OR

Lawrence Livermore National Laboratory
Technical Information Department's Digital Library
http://www.llnl.gov/tid/Library.html

BROMINE SAFETY

A Survey of Bromine, Industrial Bromine Safety Practices and Electrochemical Applications

Blake Myers

Lawrence Livermore National Laboratory

University of California

April 9, 2001

TABLE OF CONTENTS

Abstract	3
Bromine	4
Bromine Safety	6
Electrochemistry	11
Acknowledgements	22
References and Notes	22
Bibliography	28
Appendices	31

ABSTRACT

The production and handling in 1999 of about 200 million kilograms of bromine plus substantial derivatives thereof by Great Lakes Chemical Corp. and Albemarle Corporation in their southern Arkansas refineries gave OSHA Occupational Injury/Illness Rates (OIIR) in the range of 0.74 to 1.60 reportable OIIRs per 200,000 man hours. OIIRs for similar industries and a wide selection of other U.S.industries range from 1.6 to 23.9 in the most recent OSHA report. Occupational fatalities for the two companies in 1999 were zero compared to a range in the U.S.of zero for all computer manufacturing to 0.0445 percent for all of agriculture, forestry and fishing in the most recent OSHA report. These results show that bromine and its compounds can be considered as safe chemicals as a result of the bromine safety standards and practices at the two companies.

The use of hydrobromic acid as an electrical energy storage medium in reversible PEM fuel cells is discussed. A study in 1979 of 20 megawatt halogen working fluid power plants by Oronzio de Nora Group found such energy to cost 2 to 2.5 times the prevailing base rate at that time. New conditions may reduce this relative cost. The energy storage aspect allows energy delivery at maximum demand times where the energy commands premium rates. The study also found marginal cost and performance advantages for hydrobromic acid over hydrochloric acid working fluid. Separate studies in the late 70s by General Electric also showed marginal performance advantages for hydrobromic acid.

BROMINE

The Element

Bromine was discovered in 1826 by Balard in France and Lowig in Germany. It was named as a result of its strong odor after the Greek word bromos for stench. It is exceedingly toxic bringing on tears at 1 ppm and respiratory damage at 10 ppm. It is very active chemically. It is composed in nature of 51% Br79 and 49% Br81. It is the only liquid nonmetallic element under standard conditions. Its density is 3.12 gm/cm^3. Its vapor pressure is 0.28 atm at room temperature. It boils at 59C and freezes at -7C.

Lyday (1,2) has listed the following summary of the bromine situation in 1999. The quantity of bromine sold or used in the United States was 239 million kilograms (mkg) valued at $213 million or $0.89 per kg on average. 1999 yearend FOB prices were $1.23-1.50 per kg for bulk tank car loads and $2.71 per kg for a truckload of drums. Primary uses of bromine compounds were in flame retardants (40%), drilling fluids (24%), brominated pesticides (mostly methyl bromide for termites and strawberry pests) (12%), water-treatment chemicals (7%), and others including photographic chemicals and rubber additives (17%). International distribution of bromine production was as follows, United States, 45%, Israel, 35%, China, 9%, United Kingdom, 5% and other countries, 6%. Because of depleting reserves, environmental constraints and the emergence of Israel's development of the Dead Sea resource, the US portion has declined from 1973 when it was 71% of the world production.
The world production in 1999 was 510 mkg with the distribution of US, 231, Israel, 180, China, 40, UK, 30, Japan, 20 and others, 9, all in mkg units. The data show the US with a net import.

Resources

The largest source of bromine on Earth, by far, is sea water with an average concentration of 65 ppm, which gives a bromine total of 10^{11} mkg.
65 ppm compares to ~5000 ppm in the Dead Sea and about the same concentration in the brine in the Smackover Formation in southern Arkansas. Lyday (2) lists the Dead Sea resource as 10^6 mkg bromine and the U.S.resource as ~10^4 mkg bromine. Albemarle Corp. (3) considers the Smackover proven resource to give 20 years of production life which at the

1999 Smackover production of ~210 mkg gives ~$4x10^3$ mkg in good agreement considering the declining concentration and the deposits of Dow Chemical Co. in Michigan. The most important resource, by far, is the Dead Sea where the concentration is 5000/65 or 77 times higher than in the oceans and where the brine can be pumped from the surface and returned to the surface. The bromine recovery there may be secondary to K_2O (potash) and $MgCl_2$ recovery (4).

The Smackover brine is contained within the limestone of the formation at a depth of 6,000 to 9,000 ft. It must be pumped to the surface and the spent brine must be reinjected to maintain the pressure in the formation. The brine temperature coming to the surface is 215F (5) to 230F (1).The deposit was discovered in 1945 in connection with a routine analysis of oil well output by Frank Soday at Lion Oil Company (6).

Production

The bromine plant capacities of the US producers are: Albemarle Corp., 140 mkg/yr, Great Lakes Chemical Corp., 187 mkg/yr, both from brine from Smackover in southern Arkansas. The Ludington Plant, Dow Chemical Co., in Mason County, Michigan has a bromine capacity of 20 mkg/yr (all values from Ref.1). The actual production depends on brine availability.

Processing

Brine is pumped thru a tower as shown in Fig. 1 and reacted with injected chlorine to produce Br_2 and NaCl (7). HBr is produced by burning bromine with liquid hydrogen which gives a final acid temperature of ~1000F (7).

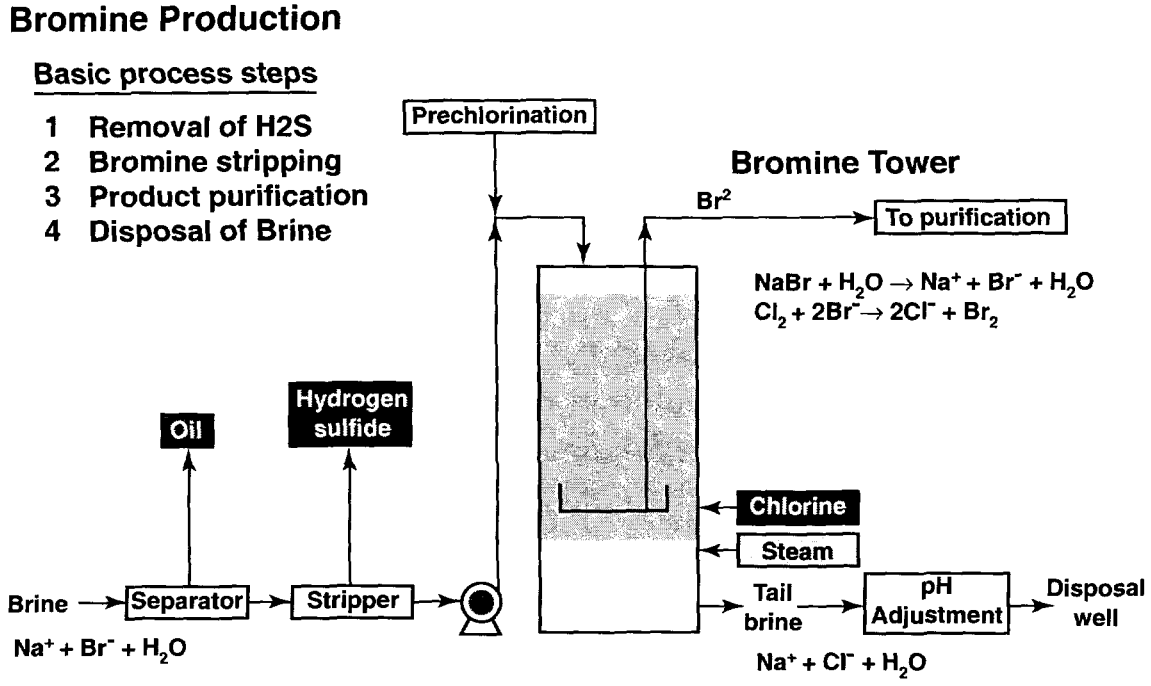

Figure 1. Bromine Recovery Process.

BROMINE SAFETY

Chemical Safety

The major refineries of Albemarle and Great Lakes are located in farmland close to Magnolia and El Dorado, AR, respectively. They are both adjacent to state highways. Their nearest neighbors are one or less than one mile away respectively. Their wells are strung out over many miles in an east/west orientation south of the cities along the Smackover Formation. Brine from the wells is transported by pipeline to the refineries. Its toxicity is relatively low but close attention is given to maintaining the integrity of the pipelines. There has never been a bromine spill reaching outside of either company's plant limits in their approximately 36 years of operation.

Great care is exercised in the refineries to insure that all equipment is properly chosen to contain the many working fluids ranging from bromine and hydrobromic acid at a wide range of temperatures and pressures to liquid hydrogen, phosgene and many other hazardous intermediates and products.

Great care is also exercised to insure that all refinery personnel are fully aware of the hazards by regular safety briefings and are properly trained in process operations and that they are properly outfitted with clothing, headgear and eye and breathing protection consistent with the hazards of their particular work environment.

Visitors are briefed at Great Lakes with a 16-minute video (8) which instructs them on the hazards, protective equipment, the spill warning system and evacuation routes. Visitors are also required to stay with an employee at all times. No visitor is allowed in without an employee-signed badge certifying that the video has been seen. Albemarle accomplishes visitor safety by employee accompaniment at all times and restricting access to hazardous areas.

Safe Handling Practice and Product Containment Materials

Please refer to the manuals, pages 16 to 28 in Appendix B, and pages 6 to 17 in Appendix C and the MSDSs as listed under MSDS in the Bibliography for guidance in handling bromine, the acids and related materials, in proper worker protective gear and emergency procedures. The simplest rules are: use glass, tantalum, niobium or TFE, PFA, FEP or Kalrez fluoropolymers for wet (>30 ppm water) or dry elemental bromine containers and wear a hard hat, chemical safety goggles, a face shield, full plastic or rubber suit, neoprene or rubber gloves tucked under the suit sleeves and rubber boots or high rubber shoes under the suit pants legs. Also carry a clothespin type respirator and self contained breathing apparatus (SCBA). If you can smell a bromine spill put on the respirator, (0.5 ppm brings tears), and leave quickly. If you have to stay very briefly, put on SCBA and leave as quickly as possible.

Beyond these simplest rules and for bromine compounds see the manuals themselves. Beyond that call Joe Sanders at Albemarle, 225-388-7758 or Jon Lehmkuhler at Great Lakes, 765-497-6011, for answers or referrals. They are anxious to see that you have the benefit of their experience with bromine safety.

Plant Safety Records

Both plants have current plant safety records as follow:

	Albemarle	Great Lakes
OSHA Recordable Occupational Injury/Illness Rate, OIIR, per 200,000 man-hours, for calender 2000	0.74	1.60
Man-hours since last lost-time accident with 140 mkg/yr plant capacity as of December 31, 2000	417,576	
Time since last lost-time accident as of April 17, 2000		
Central Plant, 93 mkg/yr capacity		291 days
South Plant, 25 mkg/yr capacity		2 yrs, 65 days
West Plant, 59 mkg/yr capacity		3 yrs, 296 days

Table 1 shows OIIRs for a wide selection of corresponding and other industries. It is seen that the bromine numbers are equal or better than the best in the table.

Table 1. OSHA Occupational Illness / Injury Rates (OIIR) in a Selection of Categories for 1998 (9)

The OIIR are in reportable incidents per 200,000 manhours of billed work.

Rank	Category	No.of Workers in Category,	OIIR
1	Crude petroleum and natural gas	138,000	1.6
2	Financing, insurance and real estate	7,219,000	1.9
3	Computer manufacturing	204,100	2.7
4	Alkali and chlorine production	10,300	2.9

5	Industrial inorganic chemicals	115,400	3.7
6	Lawrence Livermore National Laboratory	7,860	4.7
7	Gasoline service stations	672,000	4.8
8	Electric services, public utilities	363,000	5.1
9	Electronic and electrical equipment	1,707,700	5.9
10	Paper mills	154,500	6.5
11	Museums, botanical and zoological gardens	93,000	8.1
12	Bituminous coal and lignite mining	86,100	8.2
13	Grocery stores	3,061,700	9.1
14	Blast furnaces and steel mills	160,200	10.0
15	Plumbing, heating and air conditioning	831,400	10.1
16	Saw mills and planing mills	183,400	13.8
17	Fabricated pipe and fittings	30,200	14.3
18	Metal forming machine tools	17,600	14.6
19	Flat glass	16,700	17.5
20	Fabricated structural metal	80,900	17.6
21	Manufacturing motor vehicles and car bodies	343,700	23.9

Table 2 shows fatality records for 1999 for a quite similar selection of industries (10). Great Lakes has had no occupational deaths in the last 5 years of plant operation. Albemarle has had no occupational deaths in 36

years of plant operation with a current employment level of about 500. Comparing these data with those in the table warrants the conclusion that again the two producers stand among the best.

Table 2. U S Industrial Work Related Fatalities, 1999 (11)

Some Major Categories

Category	Population	Fatalities	Percent	Trend, 1994-1999
Agriculture, forestry and fishing	1,815,100	807	0.0445	~ level
Mining	589,000	121	0.0205	slightly down
Construction	5,949,500	1190	0.0200	slightly up
Manufacturing	18,807,100	719	0.0038	~ level
Chemicals and allied products	1,039,700	47	0.0045	down and up
Total US workers, 1998	104,640,700			

Some Minor Categories

Category	Population	Fatalities	Percent	Trend, 1994-1999
Mining				
Bituminous coal and lignite	86,100	28	0.0325	down
Crude petroleum and natural gas	138,000	11	0.0080	flat
Construction				
Plumbing, heating and air conditioning	831,400	66	0.0079	flat
Manufacturing				
Blast furnaces and steel mills	160,200	14	0.0087	down
Computers	204,100	None	0	Not determined (ND)
Electronic and other electrical equipment	1,707,700	13	0.0008	ND
Misc. fabricated metal products	268,400	10	0.0037	ND
Fabricated structural metal	80,900	8	0.0099	up, down

Industrial inorganic chemicals	115,400	5	0.0043	~down
Metalworking machinery	353,100	12	0.0034	ND
Manufacturing motor vehicles and car bodies	343,700	12	0.0035	up spurt
Paper mills	154,500	6	0.0039	down
Printing and publishing	1,556,400	25	0.0016	ND
Sawmills and planing mills	183,400	21	0.0115	cycling
Services				
Finance, insurance and real estate	7,219,000	105	0.0015	~flat
Gasoline service stations	672,000	28	0.0042	down
Grocery stores	3,061,700	94	0.0031	steady decrease
Electrical services, public utilities	363,000	24	0.0066	slightly down

ELECTROCHEMISTRY

Halogen Energy Storage and Power Production

There is a very large number of means to provide the electric power for industry and homeowners if not quite yet for car drivers. First coal and steam, then oil and steam, now oil or gas or nuclear and steam and or air, or solar or water supply electric power from central or mobile stations to the users. The early steam plants gave a thermal efficiency for converting the energy in the fuel to the energy delivered on the power line of ~15 to 20%. Currently oil or gas and steam yield ~35%. The Westinghouse Eddystone oil or gas fired, high pressure, high temperature steam plant of ~1960 gave 47% but was too costly. Nuclear and steam give ~30%. The current, usually gas-fired, gas-turbine Brayton Cycle (air) topped Rankine Cycle (steam) plants give ~50%. They are cost effective because lightweight, highly-efficient, aircraft derivative gas turbine technology has been applied.

Hydroelectric power is 80 to 90% efficient but only works at TVA, Grand Coulee, Bonneville, Hoover, in California and elsewhere with large water height and/or flow. Solar electric gives ~15% but is expensive and limited by sunshine. It may be assisted by storage. Solar thermal is coming along. Wind power is ~2% efficient but there is ~1600 MW of it operational on hot afternoons on the coastal hills in California (12). California law requires that it must be purchased by the electric utilities. They use it and back off from their own power generation. Storage of this energy might make sense economically in the overall energy situation. Tidal, wave, ocean thermal gradient and Gulf of Mexico geopressure power are not attractive financially and apparently, in the U.S., neither is nuclear power. Thermonuclear fusion power may come some time in the future (13).

Where does electrochemical energy fit into the overall energy picture? The devices are simple, a positive and a negative electrode immersed in an electrolyte makes up a cell. Cells can be stacked in series to give additive voltage or in parallel to give additive current just as with batteries. Supply a voltage difference between the electrodes of a water cell and hydrogen and oxygen gas are produced from the electrolyte as in the electrolyzers in everybody's high school chemistry class. Supply hydrogen and oxygen gas to the electrolyte, water is formed, a voltage difference is created at the electrodes and the device is called a fuel cell. Connecting a power source to the electrodes gives steady-state gas generation in electrolyzer mode or connecting an electrical load gives steady-state power generation in fuel cell mode.

The electrolyte can be a conducting liquid or a high temperature solid that conducts oxygen (14) or a low temperature solid that conducts protons. Such a latter solid in a DuPont version called Nafion is perfluorosulfonic acid solid polymer. The generic name is PEM for proton exchange membrane. In PEM devices the protons and oxygen ions are created by platinum catalyzed ionization from water in electrolyzer mode or from platinum catalyzed hydrogen and oxygen in fuel cell mode.

This survey is restricted to PEM electrochemical devices because they are particularly receptive to the use of halogens in the oxygen role and they have been proven in service in space and in long term service as the oxygen source for the US and British naval submarine fleets. They have long life expectancy and are free from the secondary chemical reactions present in

liquid electrolyte devices. Figure 2 shows the inputs and outputs for the charge (electrolyzer) and discharge (fuel cell) operating modes.

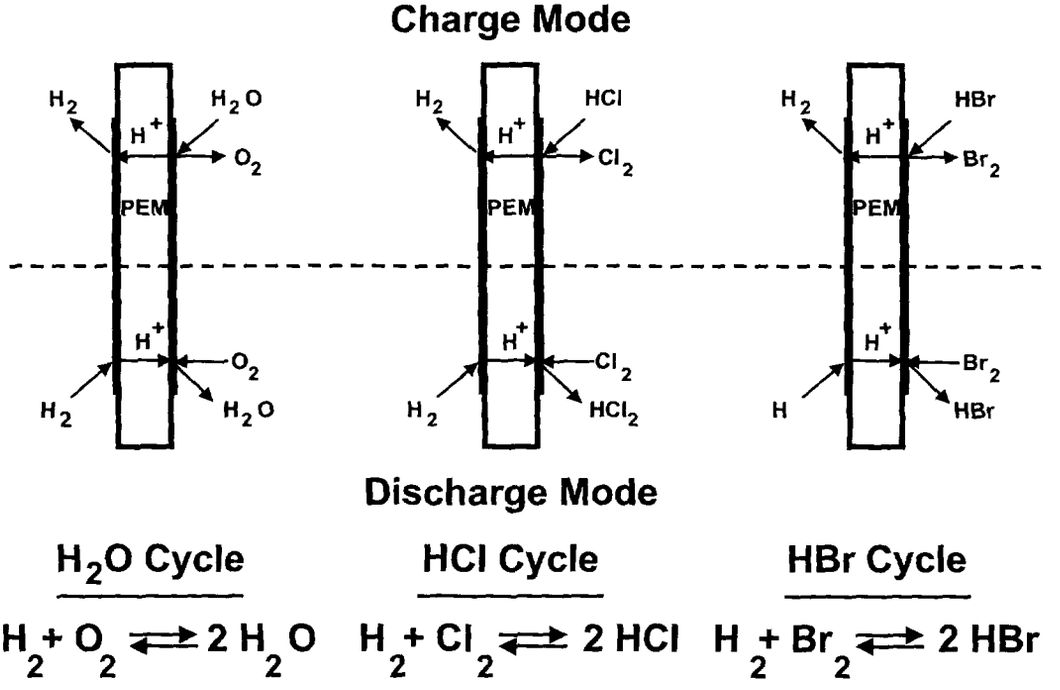

Figure 2. Electrochemical Cycles.

PEM electrochemical devices are efficient. A hydrogen-air PEM fuel cell delivers ~50% of the energy in the hydrogen (15). A hydrogen-oxygen PEM fuel cell delivers ~70% of the hydrogen energy (16). A hydrogen-halogen PEM fuel cell delivers ~84% of the hydrogen energy (17). PEM fuel cells are relatively expensive at the moment primarily because of the need for platinum or a platinum containing compound catalyst to ionize the reactants. They are simple because the products are energy and water or energy and a halogen acid.

PEM electrochemical devices are reversible. Figure 3 shows test results for reversed hydrogen-bromine, hydrogen-chlorine and hydrogen-oxygen fuel cells. It is seen that the round trip efficiencies are ~80% for the hydrogen-halogens and ~55% for hydrogen-oxygen all at a practical current density of 200 amp/ft^2. Figures 4 and 5 show the data for the halogen cycles in Figure 3 and Figure 6 shows the data for the water cycle.

These high efficiencies for reversible operation create a clear advantage for electrochemistry to serve as the means for storing solar, off-peak central

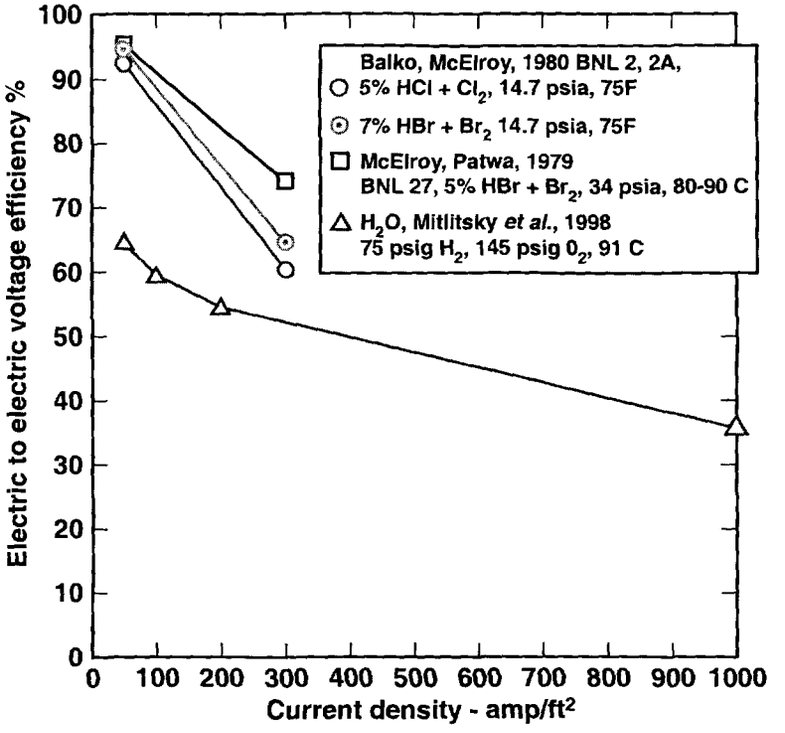

Figure 3. Reversed electrolyzer/fuel cell performance with several reactants.

station and wind energy for more appropriate delivery times. Hydroelectric (pumped) energy storage may be the most efficient, above ~80% round trip, but it needs elevated reservoirs and the connecting flumes and some proximity to the customers. Brayton Cycle gas turbine energy storage gives ~35% round trip, but it needs a depleted natural gas reservoir and customer proximity.

The reversibility of these electrochemical devices is similar to the reversibility of Pb/acid, Ni/Cd, Li/ion and Ni/MH batteries in that the media are reversed so that no reactants need to be added. Electrical energy is put in to charge the devices and discharged to deliver the energy. Leakage or chemical reaction of the reactants with the confining structure will of course limit the life of the reversibility. The PEM reversible fuel cell has the particular advantage of decoupling the reactant storage from the reaction chamber.

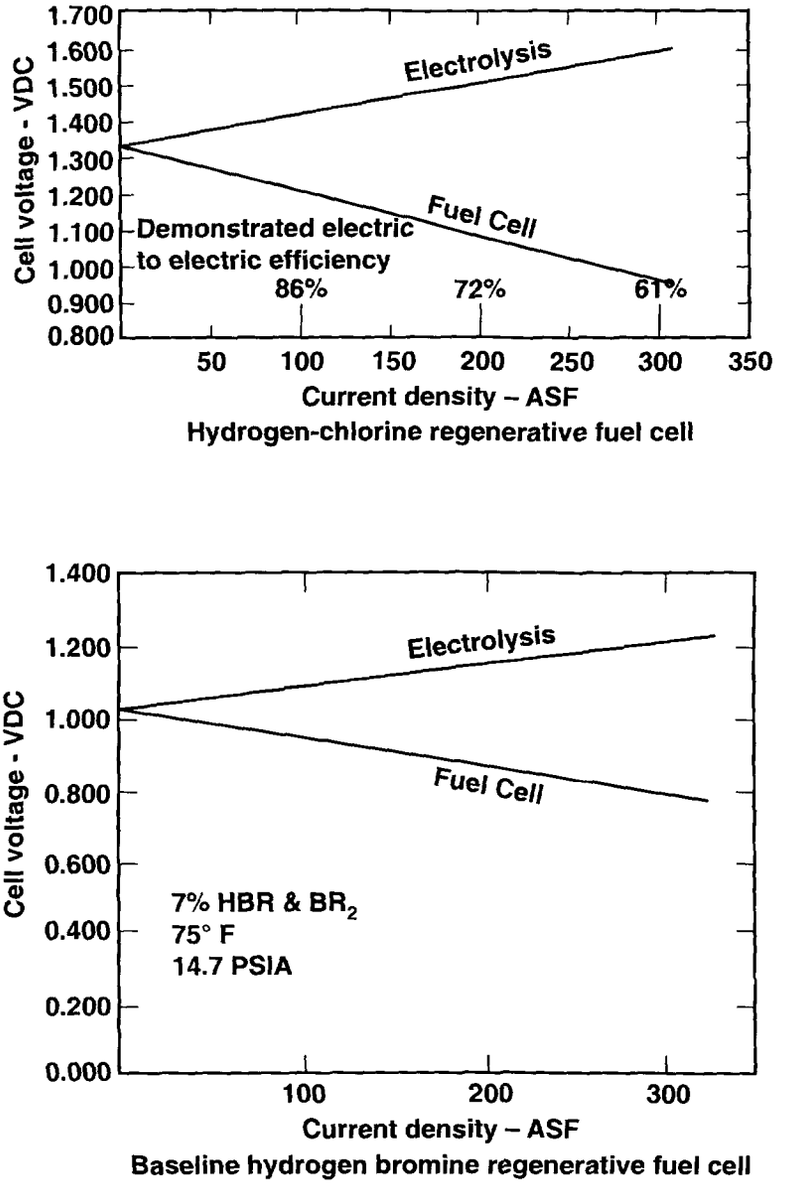

Figure 4.

It is seen in Figure 3 that efficiency decreases as the current density increases. The inefficiencies of all of the devices are due to internal electrical I^2R and reaction kinetic effects. Picking the current density is a matter of trading between capital costs which tend to decrease with increasing current density and operating costs which tend to go down as efficiency rises. The current density of 200 amp/ft^2 is in the ballpark for present devices (18).

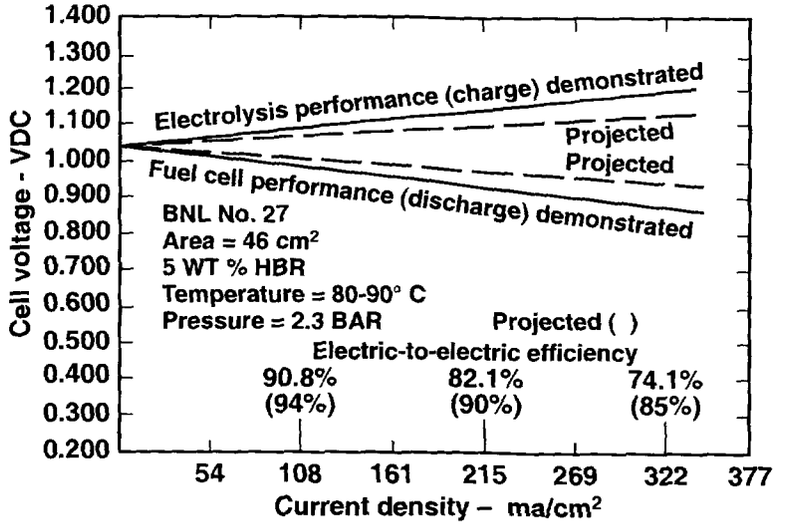

Figure 5. H_2/Br_2 regenerative cycle optimum performance.

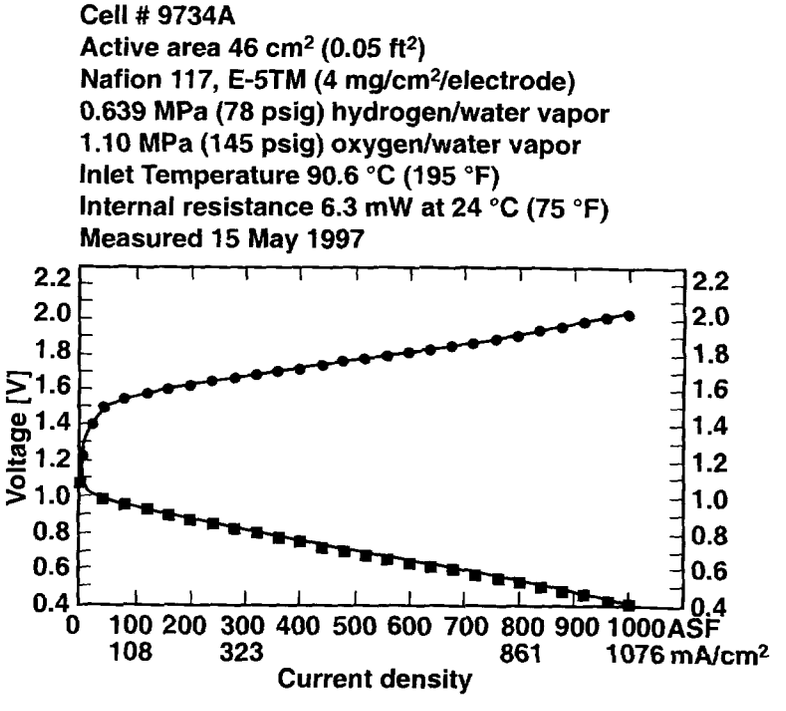

Figure 6. High performance URFC polarization curves.

It is also seen in Figure 3 that the bromine cycle device has the highest efficiency at a given current density with chlorine marginally lower and water lower still. The advantage for bromine over chlorine is likely due to the lower separation voltage for HBr compared to HCl (19). Water is lower in efficiency because the reaction rate of oxygen at the oxygen electrode in either fuel cell or electrolyzer mode seems to be much slower than in the halogen cases (20).

Figure 7 shows a 5 watt regenerative HBr unit that ran for 4000 hours cycling between fuel cell and electrolyzer operation without incident in ~1980.

The stimulus for the early work on halogen electrochemistry was the threat by OPEC of reducing crude oil production in the mid-1970s. Increased attention was given to raising the efficiency of energy production.

It was known as stated earlier that the basic steam electric power plant efficiency could be raised from the ~35% level to the ~45% level at that time by heating the steam with the exhaust from a gas turbine topping cycle. It was also known that regenerative fuel cells could take energy from renewable sources to electrolyze water and deliver energy from the combination of the resulting hydrogen and oxygen in a fuel cell at any more appropriate time with round trip efficiencies at or above the 45% level. Present day individual water electrolysis and fuel cell efficiencies are ~70% and the round trip efficiency for energy input to output is ~55% (21).

Under the OPEC stimulus it was shown that even higher round trip efficiencies would result from replacing the water with a halogen acid. Hydrogen and the halogen would be produced in electrolysis and then combined to produce energy and the acid in the fuel cell for regeneration. The gain with halogen compared to oxygen is attributed to the slower reaction rate for oxygen at the oxidizer electrode in either fuel cell or electrolysis mode as noted earlier (20).

How does all of this relate to a real present day power plant?

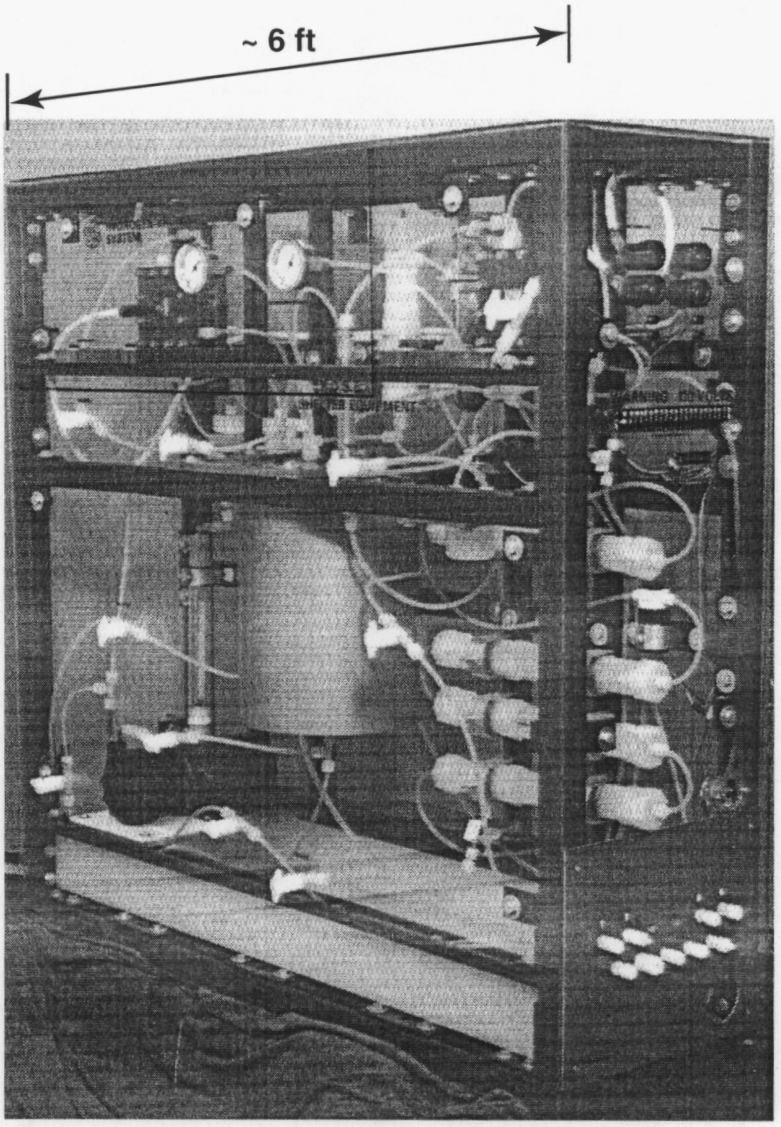

Figure 7. H_2/Br_2 demonstration regenerative fuel cell system.

The Brookhaven National Lab Regenerative Halogen Fuel Cell Power Plant Study (22)

The question was considered in the Brookhaven study done by Oronzio de Nora in 1979 for a 20 MW plant. The significant findings of this study were (23):

1. Cost of the energy delivered was 2 to 2.5 times the base cost of normal electric energy at that time (24),
2. Capital cost of the high pressure hydrogen storage plus chlorine option was $1125 per KW (25),
3. Using bromine as a working fluid saved up to ~7% in capital costs mostly due to the low storage pressure for bromine compared to chlorine (26),
4. Overall regenerative efficiency, energy out to energy in, was 70% for bromine and 67% for chlorine,
5. A chlorine option plant could have been built with the technology available in 1979, the bromine option required some additional equipment characterization,
6. Bromine inventory was 330,000 kg for the bromine option.

Other Cycles

The present process of burning Br_2 with liquid H_2 to produce HBr does not actively recover the reaction energy. The replacement of this burning with a fuel cell would produce ~90% of the reaction energy directly in electric energy and would produce the HBr at low temperature.

For a very long time the production volume of chlorine, which far exceeds the production volume of bromine, has been done electrochemically by the chloralkali process. Figures 8 and 9 show early versions and Figure 10 shows the current technology. The difference is in the nature of the membrane separating the anode and cathode regions. In the early version the membrane was asbestos (!) and these days in new plants it is the same PEM as in the fuel cell units discussed previously. In this case the PEM conducts sodium ions. Because the PEM is expensive there are still many chloralkali plants using older membrane technology.

Although it has not been reduced to significant practice there are patents (27) on the production of HBr and oxygen by reacting bromine with steam in a solar reactor and cycling the HBr thru a regenerative fuel cell in electrolysis mode to produce hydrogen and bromine. The net result of this mode is the production of hydrogen and oxygen from solar energy, water and inexpensive off-peak electric energy. The bromine inventory would be matched to the peak electric energy demand. Bromine and hydrogen would be switched to storage in preparation for energy delivery during a peak. Any gain in this scheme over a simple regenerative water cycle with

hydrogen and oxygen storage or delivery will be associated with the overall conversion efficiency gain for bromine over water shown in Figure 3 and studied by De Nora (23).

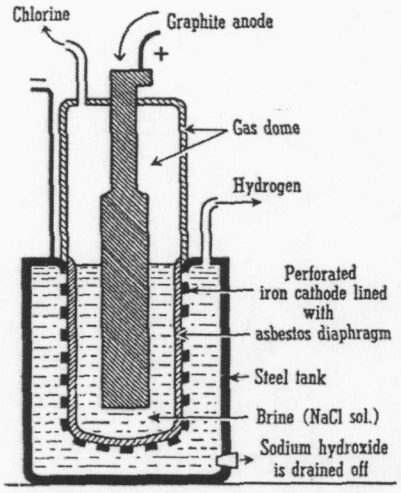

This cell consists of an iron tank. The anode is made up of graphite suspended in a solution of brine. An asbestos diaphragm prevents the diffusion of the chlorine into the sodium hydroxide solution. The cathode is a U-shaped sheet of perforated iron. The positively charged ions of sodium and hydrogen move to the cathode where hydrogen is liberated and sodium hydroxide remains in solution. The sodium hydroxide solution is drawn off at times and more brine is added.

DIAGRAM OF A NELSON CELL USED TO PRODUCE CHLORINE INDUSTRIALLY

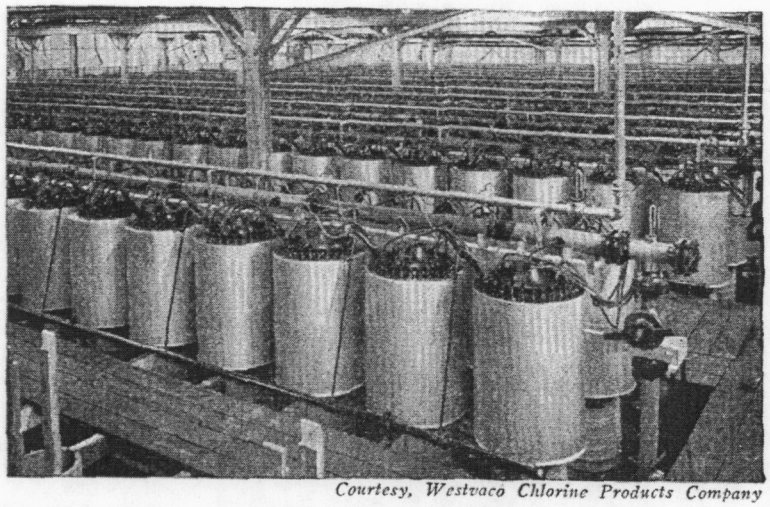

Courtesy, Westvaco Chlorine Products Company

PRODUCING CHLORINE IN QUANTITY. Chlorine is obtained on a commercial scale by means of hundreds of cells connected in batteries. About 65% of this industrial chlorine is used in the paper industry, 22% in bleaching textiles, and 10% in sanitation including the sterilization of public water supplies.

Figure 8. Chlorine Production Nelson Cells.

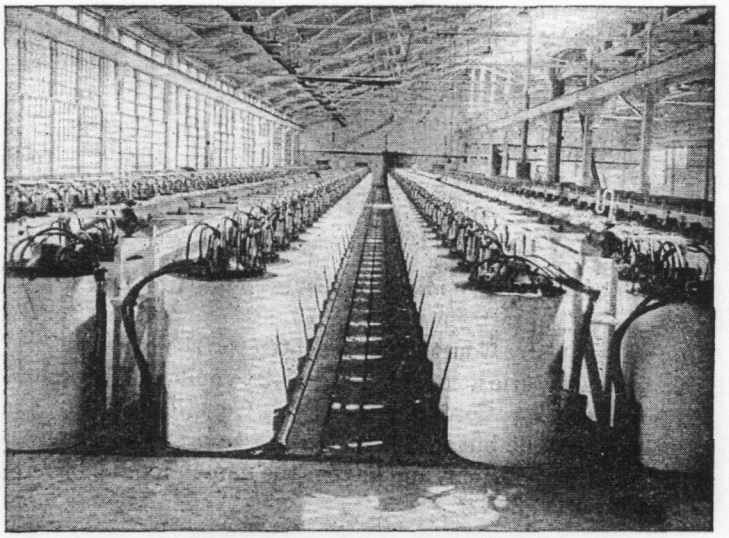

Electrolytic production of chlorine in Vorce cells.

Figure 9. Chlorine Production in Vorce Cells.

Chloralkali Process

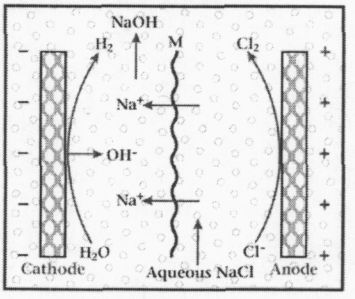

Every electrochemical cell has an anode, a cathode and often a separator or membrane (M) to keep anodic and cathodic processes apart and for selective transport of ionic species.

One of the best known of these is the chloralkali process. In the past three decades the discovery of inert highly selective ion exchange membranes and anodes have revolutionized this process, as have simultaneous developments in plate-and-frame and other cell designs. These technological advances have had a significant spill-over effect on electrochemistry in general with the result that the whole field has changed and the opportunities for cleaner, more efficient electrochemical processing have never been better.

Figure 10. Chloralkali Process.

ACKNOWLEDGEMENTS

Arkansas Geological Commission- Mike Howard, Bekki White

Arkansas Oil and Gas Commission- Shirley Knight

Albemarle Corporation- Farah Azania, Phillip Beaver, Buddy Braswell, Harold Hines, Mick Kassem, Ken Lesher, James McClellan, Gary McKinney, James Moore, Joe Sanders, Don Smith, Joe Tudor, Bret Wideman, Mick Kassem is Product Manager, Bromine and Derivatives

Benham Electrosynthesis- David Baugh, Jeff Whelan

Electrosynthesis Company Incorporated- Richard Baran, Dr.David Genders

Great Lakes Chemical Corp.- Benny Adams, Butch Kee, Jon Lehmkuhler, Nick Macchiarolo, Steve Scherrer, John Schetter, Eric Stauder, Greg Withrow, Eric Stauder is Global Business Manager, Bromine and Intermediates

Lawrence Livermore National Laboratory- Dr. Andrew Weisberg

National Power PLC- Stuart Bartley, Dr. Alice Elliott

Proton Energy Systems Inc- Fred Mitlitsky

SRT Group, Inc.- Harley Heaton

REFERENCES AND NOTES

1. P.A. Lyday, Bromine, U.S. Geological Survey Minerals Yearbook-1999, 14.1

2. P.A. Lyday, Bromine, U.S. Geological Survey, Mineral Commodity Summaries, February 2000, 40-41

3. Mick Kassem, private communication

4. An estimate of the Dead Sea resources of these salts is given in General Chemistry, Harry N. Holmes, 3d Ed., 1937, 531, as $1.2x10^6$ mkg potash, $7.7x10^5$ mkg of bromine salts $MgBr_2$ and NaBr which gives ~$6.4x10^5$ mkg of Br_2 with the assumption of an equal presence and $2.0x10^7$ mkg of $MgCl_2$. This bromine resource estimate agrees well with the 10^6 mkg reported by Lyday (2).

5. Phillip Beaver, private communication

6. Bromine Brine, Arkansas Geological Commission, http://www.state.ar.us/agc/bromine.htm. The 1952 date is a private communication from Bekki White

7. Greg Withrow, private communication

8. Visitors Safety, Central, South and West Plants, Great Lakes Chemical Corporation, 5/9/00, VHS video tape, 16 minutes, the tape is included as Appendix A.

9. See web site, http://stats.bls.gov/special.requests/ocwc/oshwc/osh/os/ostb0759.txt. The itemization in Table 1 is arbitrary. It is taken from a very large number of categories in the web site to show the range using familiar categories.

10. The itemization of the categories in the source table (11) for Table 2 is different than the itemizations for source table (9) for Table 1. Therefore some categories in the two tables are identical as, e.g., Crude Petroleum and Natural Gas and Financing, Insurance and Real Estate, etc. Some categories in Table 1 are lumped into larger categories in Table 2 as, e.g., Computer Manufacturing, 204,100, is lumped into Computer and Office Equipment Manufacturing, 380,000, Alkali and Chlorine Production, 10,300, is lumped into Industrial Inorganic Chemicals, 115,400 and Fabricated Pipe and Fittings, 30,200, is lumped into Miscellaneous Fabricated Metal Products, 268,400.

11. See web site, http://stats.bls.gov/special.requests/ocwc/oshwc/cfoi/cftb0131.txt. The itemization in Table 2 is also arbitrary. It is also taken from a very large number of categories in the web site to show the range using familiar categories.

12. See web site, http://www.awea.org/projects/california.html.

13. The National Ignition Facility (NIF) at Lawrence Livermore may reach a thermonuclear fusion power balance with deuterium-tritium fuel. A power balance occurs when input power equals output power. A useful power gain might come in the future. Deuterium is present naturally one in 5000 hydrogens. Tritium would be bred and power generated in a lithium blanket surrounding the D-T plasma. A more difficult reaction is deuterium-deuterium fusion. Should that be accomplished each cup of Earth's water would have the energy equivalent of a cup of gasoline.

14. A. Pham, B. Chung, J.Haslam, J. DiCarlo, R. Glass, Solid Oxide Fuel Cell Development at LLNL, 2000 Fuel Cell Seminar Abstracts, 787-790

15. Nuttall et al, Bibliography, Papers, ~1977, 3919

16. Mitlitsky et al, Regenerative Fuel Cell Systems, Energy & Fuels, 12, 1, 1998, Fig. 29 shows 0.90 volts for H_2/O_2 fuel cell operation at 200 amp/ft^2, the theoretical voltage is 1.23 volts (18), the resultant efficiency is 100 x 0.90 / 1.23 =73%.

17. Balko et al, Bibliography, Papers, 1980, Figures 1, both H_2/Cl_2 and H_2/Br_2 show 84% fuel cell efficiency at 200 amp/ft^2. The bromine voltage is 0.863 compared to a zero current voltage of 1.027. The chlorine voltage is 1.087 compared to 1.290.

18. The steeper slope for the halogens in Figure 3 particularly the Balko, McElroy cases indicates a tendency toward lower optimum current density than for water or for the McElroy, Patwa case. The final choice of the design point current density must be based on a thorough cost analysis.

19. The Electrosynthesis Co. brochure cited in Bibliography/General lists the oxidation-reduction potentials for chlorine as 1.36 volts, water as 1.23 volts and bromine as 1.07 volts. These values are also given in Balko et al, Bibliography, Papers, 1981. The 1.23 volts for water is given on page 577 therein and the halogen voltages are given in Fig.

5, page 581 therein. Note that the halogen voltages decrease significantly from the above-stated values for increased acid molality and that the bromine advantage persists.

20. This judgment is based on observations with operating equipment. Note that the major difference between halogen and water devices is just oxygen so that it is not unreasonable to attribute the performance difference to it.

21. Mitlitsky, op. cit., the previously noted fuel cell efficiency of 73% goes with an electrolyzer efficiency also at 200 amp/ft^2 of 100 x 1.23/1.64 = 75%. Combining the two gives a round trip efficiency of 55% as shown on Figure 3.

22. Spaziante, P.M., et al, Bibliography, Reports, 1979

23. These findings were taken from various sections of the study report.

24. This result is taken from Table 13, p.28 of the report where the base cost of energy from the supply network was 3.00 cents per kwh and the chlorine system output energy cost was 5.78 to 7.60 cents per kwh.

    The following discussion has the purpose of establishing additional background for the application of bromine based regenerative fuel cells in electric utility service. The base rate for residential power from Pacific Gas and Electric Co. (PGE) in June, 1979 was 3.72 cents per kwh. Inflating this rate by the Bureau of Labor Statistics Consumer Price Indices for 1979 and November, 2000, 264.7 and 652.92, gives 9.18 cents per kwh. The November, 2000 PGE base rate for residential energy was 11.589 cents per kwh. (Never mind the trouble that PGE is now in, involving its steeply rising costs for its power all of which is now purchased).

    Their web site is, http://www.pge.com/customer_services/business/tariffs/#ERS and choose Web Tariff Book and Electric Rate Schedules. Note that there are 56 electric rate categories and a megabyte of rate information. Category E-1 gives the 11.589 cents per kwh base rate for residential users. Category E-20P covering about 25 pages of closely spaced text is for primary users with

maximum demands of one megawatt or higher. There are monthly demand charges for maximum peak period, maximum part peak period and (plain) maximum demand, all for summer and for winter. They range from $13.35 per kw maximum to $2.55 per kw minimum for the demand periods to zero for other times. The energy charges vary over the same seven periods from 6.210 to 4.637 cents per kwh. There is an average rate limiter of 13.995 cents per kwh and a peak period rate limiter of 84.876 cents per kwh, both in the summer, to cover users who don't use much energy in the periods. There is a further monthly charge of $310 for the meter.

As a simplified example of these charges, take a 1000 kw continuous user during a maximum peak power demand period in the summer. The demand and meter charges are at a rate of (13,350 + 310)(100) / 1000 x 30 x 24 = 1.897 cents per kwh. The energy charge rate is 6.210 cents per kwh which gives a total cost rate of 8.107 cents per kwh. Escalating the base power rate in the de Nora report by the CPI ratio of 2.467 for November 2000 to 1979 gives 3.0 x 2.467 = 7.401 cents per kwh which compares closely with the simplified example.

There has been a public announcement by Tennessee Valley Authority and Innogy that they are planning a regenerative fuel cell (RFC) energy storage system for installation in the TVA electric power generating system. Sodium bromide and sodium polysulfide are the working fluids in the RFC system instead of HBr on the basis that the costs and hazards of using hydrogen are reduced with the sacrifice of some points in operating efficiency. The justification for the RFC system is that low demand electric power can be produced at low relative cost by the provider, the energy can be stored in the RFC system and delivered at demand peaks at maximum demand prices. The cited demand costs, ranging from a summer maximum peak period rate of $11.80 per kw month to a winter maximum demand rate of $2.55 per kw month to zero for other times and the cited energy costs ranging from 6.210 cents per kwh for summer peak to 4.637 cents per kwh begin to illustrate the producer's savings in generating off peak power. These rates are the retail rates and only begin to represent the real costs to the producer for peak and low demand periods. In fact theTVA/Innogy announcement seems to indicate that the numbers have been determined and RFC energy storage is expected to provide reduced energy costs.

An indication of the wholesale cost of generating electric power is given by an unofficial response from PGE in 1974 where their cost of generating non-hydro, non-geothermal, non-nuclear electric power was 0.95 cents per kwh compared to the 1974 residential rate of 2.167 cents per kwh.

25. The conversion of capital costs in $/kw to capital cost charges in cents per kwh involves the annual fixed charge rate R, to cover interest on debt, return on equity, amortization, taxes etc., and the capacity factor f, which relates the kwh generated per year to the kw installed, as follows: cents per kwh x 8760 f / 100 R = $ per kw. The coefficient α = 8760 f / 100 R = 30 to 60 depending on the character of the plant service which determines f and the cost of money which influences R. Reasonable values for f and R are 0.65 and 0.15 which gives α = 380. The quoted capital cost of 1125 $/kw relates thereby to 2.96 cents per kwh, all in 1979 dollars. The range of energy costs in the de Nora report of 5.78 to 7.60 cents per kwh gives an operating cost range 2.82 to 4.64 cents per kwh which is in the usual range of ~1.0 to 1.5 times capital costs

26. This result is taken from Table 8 in the de Nora report (22) which shows 62.(13) to 66.(60)% round trip efficiency for H_2/Cl_2 depending on the site choice and the hydrogen storage pressure and 69.(83)% for H_2/Br_2. The efficiencies compare reasonably with those shown on Figure 3 noting that the de Nora figures include parasitic and rectifier/inverter losses in contrast to the Figure 3 data which is based on electric in and out (electric to electric) at the device. Although the report does not list the current density in the device their product line of electrochemical devices run at ~200 amp/ft^2. The entries in their Table 10 for rectifier/inverter and electrochemical losses have been apparently transposed. Assuming that they have, the de Nora electric to electric efficiency for H_2/Br_2 is 100 x (286.4-61.8)/286.4 = 78.4% and for H_2/Cl_2 is 100 x (275.5-61.7)/275.5 =77.6%. These values agree very closely with the Balko, McElroy data in Figure 3 for 200 amp/ft^2.

27. Robin Z. Parker, Hydrogen Generation and Utility Load Leveling System and the Method Therefor, US Patent 5,219,671, 1993 and follow-on extensions

BIBLIOGRAPHY

General

Chloralkali Process, Electrosynthesis Company Incorporated

Electrolysis of Brine, Chemistry and You, Hopkins et al, Lyons and Carnahan, 1939, 186-187

Regenerative Solid Polymer Electrolyte (SPE) Fuel Cells, see Holmes, General Chemistry, MacMillan, 1937, Fig. 81, 206, see also Nuttall, Bibliography, Papers, 1982

Turn On the Electrochemistry, Electrosynthesis Company Incorporated, brochure, ca. 1999

de Nora S.p.A., Proton Exchange Membrane Fuel Cells, brochure, 1999

Bromine, Albemarle Corporation, properties and shipping information, 1999

Bromine, web page, http://www.ch.cam.ac.uk/misc/weii/bromine.html

Bromine applications, Dead Sea Bromine web page, http://www.deadseabromine.com/brome/brom

Bromine products, ditto

Bromine, web page, http://www.webelements/elements/text/Br/key.html

Material Safety Data Sheets

Hydrobromic Acid 62%, Johnson Matthey

Bromine, Great Lakes Chemical Corporation, 1999

Hydrobromic Acid 62%, Bromine Compounds Ltd, 1997

Hydrobromic Acid 52%, Bromine Compounds Ltd, 1999

Hydrobromic Acid 48%, Bromine Compounds Ltd, 1999

Bromine, Bromine Compounds Ltd, 2000

Papers

Nuttall, L.J., Development Progress on Solid Polymer Electrolyte Fuel Cells with Various Reactant Sources, General Electric Co., 1982

Balko, E.N., McElroy, J.F., LaConti, A.B., Halogen Acid Electrolysis in Solid Polymer Electrolyte Cells, Int. J. Hydrogen Energy, 6, 6, 577-587, 1981

Balko, E.N., McElroy, J.F., High-Energy-Density Hydrogen-Halogen Fuel Cells for Advanced Military Applications, General Electric Co., 1980

Balko, E.N., Heat rejection and thermal efficiency in model hydrogen-halogen fuel cell systems, J. Appl. Electrochem., 1981, 91-102

McBreen, J., et al, The Hydrogen-Chlorine Energy Storage System, Proc. DOE Chemical Energy Storage and Hydrogen Energy Systems Contract Review, JPL Publ. 78-1, 1977

McElroy, J.F., Development of a Regenerative Solid Polymer Electrolyte Hydrogen Halogen Fuel Cell for High Efficiency Energy Storage, ibid., 1977

Beaufrere, A., et al, A Hydrogen-Halogen Energy Storage System for Electric Utility Applications, 12th IECEC, 1977

Schuetz, G.H., et al, Electrolysis of Hydrobromic Acid, _____, 1977

McElroy, J.F., Patwa, G.G., Electrical Energy Storage via High Efficiency-Cost Effective Hydrogen-Halogen Regenerative Fuel Cell Systems, _____, 1977

Nuttall, L.J., et al, Feasibility Study of a Regenerative Solid Polymer Electrolyte Fuel Cell System Using Hydrogen/Chlorine Reactants for High Efficiency Energy Storage, J. Hydrogen Energy, ~1977, 3919-3936

Reports

Kosek, J.A., LaConti, A.B., Investigation of Bromine Complexed Hydrogen/Bromine Regenerative Fuel Cells for Portable Electric Power, MERDC-38, 1984

Ditto above, MERDC-34, 1984

SPE Regenerative Fuel Cells for Aerospace Energy Storage Applications, General Electric Co., 1984

Spaziante, P.M., et al, Hydrogen/Halogen Energy Storage System: Safety, Performance and Cost Assessment, Oronzio de Nora for Brookhaven National Lab, 1979

Hydrogen-Chlorine Breadboard System Tests, HPR-4, General Electric Co., 1978

Ditto above, HPR-3, 1978

Solid Polymer Electrolyte Fuel Cell Technology Program, TPR-049, General Electric Co., 1978

Hydrogen/Halogen Energy Storage System Development, HPR-2, General Electric Co., 1978

The Hydrogen/Halogen Battery for Peak-Load Shaving, Bechtel Corporation, 1977

SPE HCl Regenerative Fuel Cell for Bulk Energy Storage Systems, BH-5, General Electric Co., 1976

APPENDICES

APPENDIX A

Visitors Safety, Central, South & West Plants, Great Lakes Chemical Corporation, 5/9/00, compact disc

APPENDIX B

Bromine: safety and handling, Great Lakes Chemical Corporation, 42 pages

APPENDIX C

Bromine Handling Manual, Albemarle Corporation, 8/98

DIRECTIONS FOR PLAYING APPENDIX A

Extend screen saver start time to 18 minutes or greater
This disc can be played with Quick Time Player or Real Player or other players
Either QT or Real can be downloaded free from the Net:
http://www.apple.com/quicktime/download, go to free download of Quick Time Player
http://www.real.com, go to free download of Real Player Free

Download and install program

File name for information on disc is safety.mpg
Insert disc into CD drawer
For Macintosh:
    Click on CD icon to get Untitled CD folder with safety.mpg file
    Click on file, this brings up player window
    Click on play icon and set sound volume level
For PC/Windows:
    Go to Windows Explorer and find Untitled CD in CD Drive file
    Click on Untitled CD, this brings up player window with safety.mpg file
    Click on play icon and set sound volume level

Dr. Sigmund Gronich, Mail Stop 6A-116, Forrestal Bldg., U.S. D.O.E., 1000 Independence Ave. SW, Washington, DC 20585, 202-586-1623

Dr. Neil Rossmeissl, Mail Stop 6H-034, Forrestal Bldg., U.S. D.O.E., 1000 Independence Ave. SW, Washington, DC 20585, 202-586-8668

Phillip Beaver, Albemarle Corp., P.O. Box 14799, Baton Rouge, LA 70898, 225-768-6062

Dr. Ken Stroh, MS C331, LANL, Los Alamos, NM 87545, 505-667-7933

Blake Myers, L-189 LLNL, Livermore, CA 94550, 8 copies, 925-422-7321

Fred Mitlitsky, Proton Energy Systems, 50 Inwood Road, Rocky Hill, CT 06067, 860-571-6533

Eric Stauder, Great Lakes Chemical Corp., P.O. Box 2200, Hwy 52 NW, West Lafayette, IN 47906, 765-497-6790

Jon Lehmkuhler, Great Lakes Chemical Corp., P.O. Box 2200, Hwy 52 NW, West Lafayette, IN 47906, 765-497-6011

Butch Kee, Great Lakes Chemical Corp., P.O. Box 7020, El Dorado, AR 71731-7020, 870-864-1689

Mick Kassem, Albemarle Corp., 451 Florida St., Baton Rouge, LA 70801, 225-388-8011

Joe Sanders, Albemarle Corp., 451 Florida St., Baton Rouge, LA 70801, 225-388-7758

Dr. Ken Cory, Calpine Corp., 50 West San Fernando St., San Jose, CA 95113, 408-792-1216

Dr. Andrew Weisberg, L-477, LLNL, Livermore, CA 94550, 925-422-7293

Dr. David Genders, Electrosynthesis Co. Inc., 72 Ward Road, Lancaster, NY 14086-9779, 716-684-0513

Catherine Mohr, Aero Vironment Inc., 825 Myrtle Ave., Monrovia, CA 91016, 626-357-9983

Omo Velev, Aero Vironment Inc., 825 Myrtle Ave., Monrovia, CA 91016, 626-357-9983

Oliver Murphy, Lynntech Inc., 7610 Eastmark, College Station, TX 77840, 979-693-0017

Tony LaConti, Giner Corp., 89 Rumford, Newton, MA 02453, 781-893-6457

Dr. P.A. Lyday, Mail Stop 983, US Geological Survey, 12201 Sunrise Valley Drive, Reston, VA 20192, 703-648-7713

Robin Parker, Solar Reactor Technologies, 3250 Mary St., Suite 407, Miami, FL 33133, 305-442-9966

Harley Heaton, Solar Reactor Technologies, 3250 Mary St., Suite 407, Miami, FL 33133, 305-442-9966

Stewart Male, Innogy Technology Ventures, Harwell International Business Centre, Harwell, Didcot OX11 OQA, England, 44(0) 1235 444902

Gareth Evans, Innogy Technology Ventures, Harwell International Business Centre, Harwell, Didcot OX11 OQA, England, 44(0) 1235 444903

To: Blake Myers <myers16@llnl.gov>
Subject: Re: Request for Permission

No problem Blake. I see where I will also get a copy of the final report from your distribution list. Regards, Mick

Blake Myers <myers16@llnl.gov> on 07/23/2001 03:39:43 PM

To: Mick Kassem <mick_kassem@albemarle.com>
cc:

Subject: Request for Permission

Mick, As we discussed on the phone our Technical Information Division has requested that you give permission to include the Albemarle Bromine Safety brochure as a part of the forthcoming report titled Bromine Safety which I have written. You have seen final draft copies of this report.

I have sent to you by fax the distribution list for the report.

I understand from you that the brochure in updated form will be available on the Albemarle web site in the near future.

I want you to know that I greatly appreciate the help that I have received from you and many others at Albemarle.

Please refer to the report, p.23 which lists Mick Kassem as Product Manager, Bromine & Derivatives, Albemarle Corp.

Office of Classification and Export Control

LLNL ADC List - 06/15/2001

There are **17** authorized derivative classifiers matching the criteria.

(* Indicates matrix)

Authorized Derivative Classifier	Empl. Number	Directorate	Department	Phone	Payroll Acct
Aldis, David F.	008056	Engineering	ME-New Tech Engr Div (NTED)	3-9211	9771
Faux, Douglas R.	268044	*NAI	*Q-Division	3-9705	9771
Fischer, Larry E.	276469	Engineering	ME-New Tech Engr Div (NTED)	3-0159	9771
Greenwalt, Robert J. Jr.	001385	*NAI	*Q-Division	3-9414	9771
Hafner, Ronald S.	348334	Engineering	ME-New Tech Engr Div (NTED)	3-1449	9771
Kervin, James E.	473806	*NAI	*Q-Division	2-8422	9771
May, Glenn A.	577656	*NAI	*Q-Division	2-9508	9771
Milner, Joseph R.	612224	Engineering	ME-New Tech Engr Div (NTED)	2-9839	9771
Monaco, Suzanne B.	618188	*NAI	*Q-Division	2-7734	9771
Neuman, Jo Ellen	001774	*NAI	*Q-Division	42671	9771
Priest, Robert E.	718994	Engineering	ME-New Tech Engr Div (NTED)	2-8677	9771
Reitter, Thomas A.	739938	Engineering	ME-New Tech Engr Div (NTED)	2-1468	9771
Saito, Theodore T.	777762	Engineering	ME-New Tech Engr Div (NTED)	2-1553	9771
Schaffer, Thomas L.	787150	Engineering	ME-New Tech Engr Div (NTED)	2-4972	9771
Schauer, Dale A.	787600	Engineering	ME-New Tech Engr Div (NTED)	3-0303	9771
Upadhye, Ravindra S.	909837	Engineering	ME-New Tech Engr Div (NTED)	3-1299	9771
Walsh, Heather J.	000725	*NAI	*Q-Division	4-4193	9771

543

1269

For information about this list, contact Bobby Cordero, cordero1@llnl.gov.

---

ted

Administrative Information

Lee D. Ron Hafner made the judgment that the document is DUSA

Great Lakes Chemical Corporation

Brominated Performance Products

FAX COVER SHEET
CONFIDENTIAL

TO: Blake Myers
Lawrence Livermore National Laboratories
Fax (925) 424-3731
Ph (925) 422-7321

FROM: Jon D. Lehmkuhler
Great Lakes Chemical Corporation
Brominated Performance Products
FAX: (765) 497-5941
Ph: (765) 497-6011
e-mail: jlehmkuh@glcc.com

SUBJECT: Release for use of Handling Guides and Videos

COMMENTS:
Blake,
This is what was put together to answer the concerns your publishing group had regarding use of our materials. I hope this is sufficient for what you need. Let me know if there are any problems.
Regards,
Jon Lehmkuhler

Total Pages: 2

IF FAX IS UNCLEAR OR NOT RECEIVED IN COMPLETE FORM, PLEASE CALL (765) 497-6011. THANK YOU.

LIMITED COPYRIGHT LICENSE

Great Lakes Chemical Corporation ("GLCC") hereby grants to Blake Myers of Lawrence Livermore National Laboratories a limited license to utilize GLCC's Bromine Safety Guide and Safety Orientation Video for Plant Visitors (collectively, "the Works") for the purpose of conducting scientific research and publishing articles relating to such research, including the right to publish the Works as part of such articles. In no event shall Mr. Myers be entitled to utilized the Works for any other purposes.

Great Lakes Chemical Corporation

Jon D. Lehmkuhler

By: Jon D. Lehmkuhler

Its: Technical Service Manager

SBIMAN1\100652_1.DOC

Great Lakes
Chemical Corporation

Bromine: safety and handling

Br2

Responsible Care®
A Public Commitment

Emergency Procedures

In case of emergencies resulting from bromine, follow first-aid procedures presented on Page 27 for immediate, temporary measures. Always contact Great Lakes Chemical Corporation when a bromine accident occurs.

For further instructions:

- Emergency Response Team 870-862-5141 or 800-949-5167
- From outside North America +870-862-5141
- CHEMTREC 800-424-9300
- CHEMTREC (District of Columbia only) 483-7616
- Technical Service Help-Line 800-378-9451

Great Lakes Chemical Disclaimer for Bromine Safety and Handling Guide

Great Lakes Chemical Corporation provides this Bromine Manual solely for the convenience of its customers and their employees and contractors who are careful, skilled, experienced and competent in handling and use of dangerous chemicals. This manual is neither sufficient nor appropriate as training for those who do not meet this standard. Such organizations or persons should contact Great Lakes Chemical Corporation prior to using or handling bromine.

Nothing in this Bromine Manual is intended, or is to be construed, as a recommendation by Great Lakes to use, reuse, further manufacture, sell or import/export bromine in a manner that: (i) infringes any patent, trademark, copyright, trade secret or other intellectual property rights of any third party in any jurisdiction; (ii) violates any law; or (iii) does not meet the standard of care generally prevailing in the United States.

GREAT LAKES EXPRESSLY DISCLAIMS ALL REPRESENTATIONS OR WARRANTIES OF ANY KIND, EXPRESS OR IMPLIED, WITH RESPECT TO THIS BROMINE MANUAL, INCLUDING BUT NOT LIMITED TO WARRANTIES OF MERCHANTABILITY, FITNESS FOR PARTICULAR PURPOSE, OR ANY PURPOSE, WHETHER THIS MANUAL IS USED ALONE OR IN COMBINATION WITH ANY OTHER MATERIAL.

Great Lakes disclaims liability for, and the user of this Bromine Manual assumes all risk of, the use of the information contained in this Bromine Manual and the results of such use.

Great Lakes disclaims all liability and responsibility for any and all suits, claims, losses, liabilities, demands, judgments, costs, fines, penalties or expenses (including, without limitation, attorneys' fees) with respect to bodily injury, personal injury, property damage or economic injury sustained by any person and resulting or arising, or allegedly resulting or arising, directly or indirectly, from: (i) the information contained in this Bromine Manual; or (ii) except as expressly otherwise provided in a written agreement between Great Lakes and a customer, the sale, transportation, possession, processing, treatment, storage, disposal, further manufacture, use, other reuse or resale, or the import or export of bromine.

Great Lakes Chemical Corporation

INTRODUCTION

GREAT LAKES CHEMICAL CORPORATION IS BROMINE

Bromine is a member of the halogen group of elements. It is a heavy, reddish-brown liquid that gives off a red vapor at room temperature. It is the only non-metallic element that is a liquid at room temperature. An element that must be carefully handled, bromine is used in flame retardents, fire extinguishants, agricultural products, water purification compounds, dyes, pharmaceuticals, photographic chemicals, and drilling fluids.

The story of bromine began long, long ago, when dinosaurs roamed the Earth and a shallow sea covered much of Southern Arkansas. As the Gulf of Mexico began to withdraw from the North American continent, both chloride and bromide salts concentrated, resulting in the brine found in the limestone strata now called the Smackover formation. It is from this formation, located approximately 8000 feet below the Earth's surface, that bromine-rich brine is recovered. Bromine is also recovered from seawater and the Dead Sea area.

Coming to South Arkansas in the early 1960s, Great Lakes Chemical Corporation is among the world's largest producers and marketers of bromine and brominated specialty chemicals. Today, 97 percent of the bromine produced in the U.S. comes from Arkansas.

Table of Contents

Emergency Procedures i

Introduction iii

Great Lakes Chemical is Bromine

Responsible Care® – Doing the Right Thing 7

Bromine 8

Physical Properties 9

Density of Liquid Bromine 9
Solubility 10
Mutual Solubility of Bromine and Water 10
Surface Tension 11
Thermodynamic Data 11
Vapor Pressure of Liquid Bromine 12
Vapor Pressure of Water Over Moist Bromine 12
Viscosity 13
Chemical Reactions 14
Inorganic Bromine Compounds 14
Organic Bromine Compounds 15

Procedures for the Safe Handling of Bromine 16

Personal Safety Precaution Recommendations 16

Personal Protective Clothing and Equipment 18

Respiratory Equipment 18
Clothing 18

Safety Practices in the Work Area 19

General Instructions 19
Ventilation 19
Containers and Storage 20
Fire Precautions 20

Bromine Handling for Laboratory Use 21

General Instructions 21
Equipment 21
Storage and Transport 21
Handling 21

Neutralization of Waste Streams 22

Physical Hazards/Properties 22
Apparatus 22
Stoichiometry 22
Chemistry 23
Neutralization (Bisulfite) 23
Neutralization (Sulfite) 23
Procedure 23

Emergency Procedures 24

Transportation Emergencies 24
Leaking Containers 25
Recovery and Salvage 25
Cleaning up the Contaminated Area 25
Cleaning Undamaged Containers 26
Fire 26

Table of Contents (continued)

Bromine First Aid 27

How to Recognize Bromine Overexposure 27
First Aid for Bromine Exposure 27
Toxicology 28

Engineering Materials Recommendations 28

Lead 28
Nickel and Nickel Alloys 29
Tantalum 29
Steel and Stainless Steel 29
Glass and Ceramics 29
Glass-Lined Steel 29
Plastics 29
Lubricants 29

Storage Methods Recommendations 30

Shipping Containers 30

Glass Bottles 30
Storage 31
Drums 31
Storage 31
Pump Method Unloading Recommendations 33
Pressure Method Unloading Recommendations 33
Cylinders 35
Storage 36
Unloading of Non-returnable Steel Cylinders 36
Disposing of Non-returnable Steel Cylinders 37
Tank Trucks 38
Unloading 38
Tank Cars 40
Unloading 41

Design Recommendations 42

Responsible Care® – Doing the Right Thing

Responsible Care® is the chemical industry's health, safety and environmental performance improvement initiative. As an obligation of membership, Responsible Care® is the ethical framework around which American Chemistry Council member and Partner companies, including Great Lakes Chemical Corporation, operate. Responsible Care® is Great Lakes' commitment to respond to public concerns about the safe management of chemicals and has rapidly become the single most important performance improvement initiative within the chemical industry.

Our industry creates products and services that make life better for people around the world – both today and tomorrow. The benefits of our industry are accompanied by enduring commitments to Responsible Care® in the management of chemicals worldwide. We will make continuous progress toward the vision of no accidents, injuries or harm to the environment and will publicly report our global health, safety and environmental performance. We will lead our companies in ethical ways that increasingly benefit society, the economy and the environment while adhering to the following principles:

- To seek and incorporate public input regarding our products and operations.
- To provide chemicals that can be manufactured, transported, used and disposed of safely.
- To make health, safety, the environment and resource conservation critical considerations for all new and existing products and processes.
- To provide information on health or environmental risks and pursue protective measures for employees, the public and other key stakeholders.
- To work with customers, carriers, suppliers, distributors and contractors to foster the safe use, transport and disposal of chemicals.
- To operate our facilities in a manner that protects the environment and the health and safety of our employees and the public.
- To support education and research on the health, safety and environmental effects of our products and processes.
- To work with others to resolve problems associated with past handling and disposal practices.
- To lead in the development of responsible laws, regulations and standards that safeguard the community workplace and environment.
- To practice Responsible Care® by encouraging and assisting others to adhere to these principles and practices.

Bromine

Bromine, Br_2, is the only nonmetallic element that is liquid at ordinary temperatures and pressures. It has a dark, amber-red color and an intensely irritating odor. The name is derived from the Greek *bromos,* meaning "stench." There are two stable isotopes, ^{79}Br, and ^{81}Br, present in nearly equal proportions such that the atomic weight is 79.904. The atomic number is 35. Within rather wide limits, the liquid and vapor are diatomic (Br_2).

Bromine exposure, either by liquid contact or vapor inhalation, represents a hazard with the potential of serious injury or death. The liquid rapidly attacks skin and other tissues to produce irritation and necrosis. Comparatively low concentrations of vapor are quite painful and are highly irritating to the eyes and the entire respiratory tract. Excessive exposure to acutely dangerous concentrations will result in serious inflammation and edema, frequently followed by pneumonia. Excessive exposure to low concentrations, although not acutely dangerous, will result in inflammatory reactions in the eyes and respiratory passages. Vapor concentrations of 500-1000 parts per million (ppm) by volume are dangerous to life at exposures for 0.5 to 1 hour. The maximum permissible exposure weighted over 8 hours is 0.1 ppm. At this level bromine can still be detected by its odor. A concentration of 10 ppm can hardly be tolerated for more than a few moments.

Bromine, a powerful oxidizing agent, is capable of causing combustibles to ignite on contact. It is on the SARA 302 list of Extremely Hazardous Substances. This chemical is subject to the reporting requirements of Section 313 of Title III of the Superfund Amendments and Reauthorization Act (SARA) of 1986 and 40 CFR Part 372. The EPA reportable quantity for a spill or release is 500 pounds. The National Fire Protection Association (NFPA) rating is health: 3, flammability: 0, reactivity: 0, Oxidizer.

Responsible Care®
A Public Commitment

Physical Properties – Bromine - Br_2

Atomic Number	35
Molecular Weight	159.81
Valences	-1,1,3,5,7 (Br_2)
Boiling point	58.78°C (137.8°F)
Compressibility, saturated vapor @ 25°C (77°F)	0.991
Pounds per Gallon @ 25°C (77°F)	25.9
Specific Gravity, 20°C/4°C (68°F/39.2°F)	3.119
Dielectric Constant, 10 freq., 25°C (77°F)	3.33
Explosive Limits	Non-flammable; oxidizing properties may ignite combustibles on contact
Flashpoint	None
Freezing Point	-7.27°C (18.91°F)
Hygroscopicity	Will absorb water from wet air
Vapor Density, grams/liter (0°C, 1 atms.)	7.139
Latent Heat of Fusion	15.8 cal/g (28.4 BTU/LB)
Latent Heat of Vaporization	44.9 cal/g (80.8 BTU/LB)
Refractive Index, 20°C (68°F)	1.6083

Density of Liquid Bromine

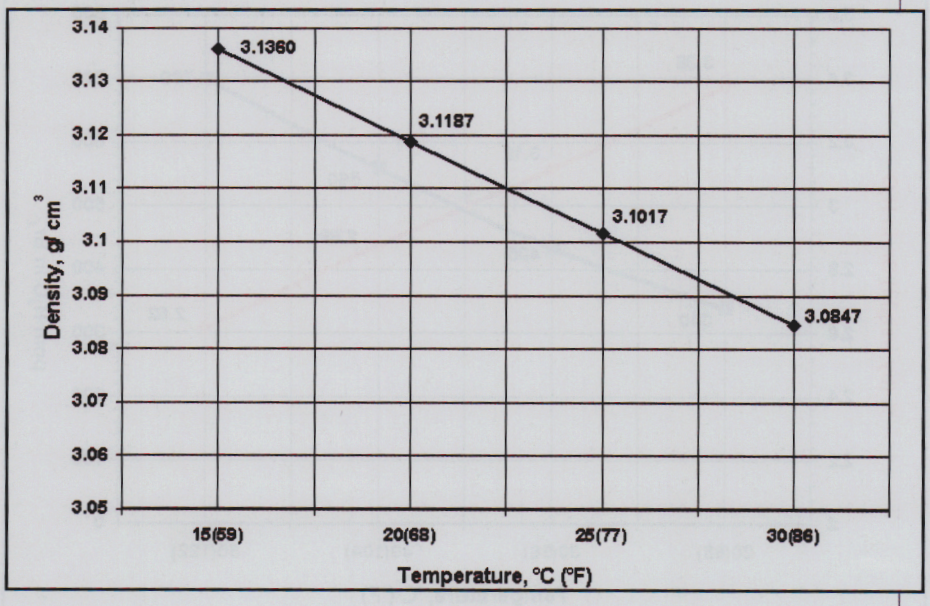

Solubility, approximate, g/100g solvent @ 25°C (77°F)

Carbon Tetrachloride	Infinite
Chloroform	Infinite
Methylene Chloride	Infinite
Carbon Disulfide	Infinite
Alkyl Bromides	Infinite
Ether	Infinite
Methanol	Infinite
Concentrated Hydrochloric Acid	Soluble
Aqueous Metallic Halides	Soluble

Grams Bromine/100 grams water

10°C (50°F)	3.74
20°C (68°F)	3.65
30°C (86°F)	3.43
54.3°C (129.7°F)*	3.58

** boiling point of bromine saturated with water at one atmosphere*

Mutual Solubility of Bromine and Water

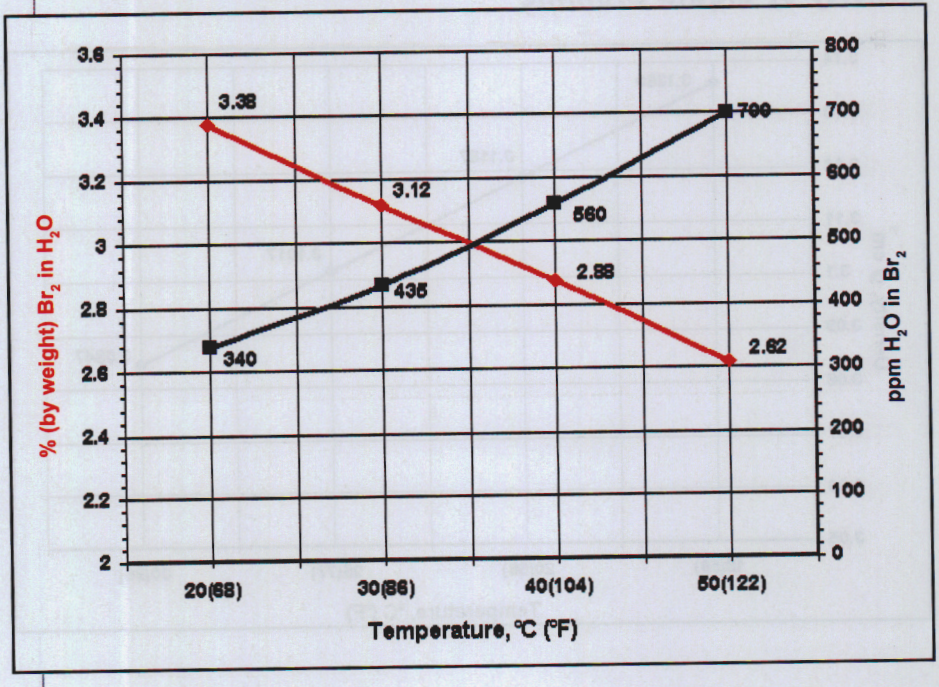

Surface Tension

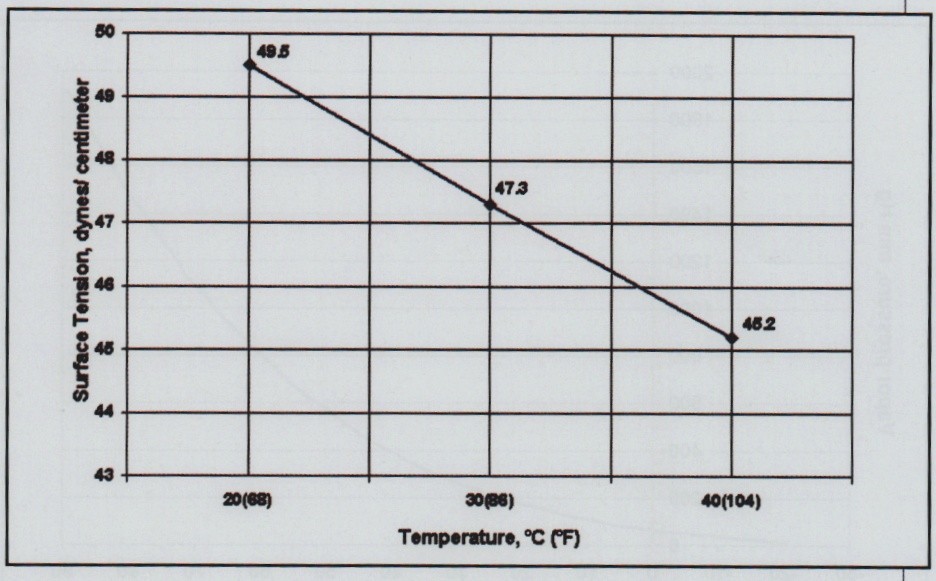

Thermodynamic Data

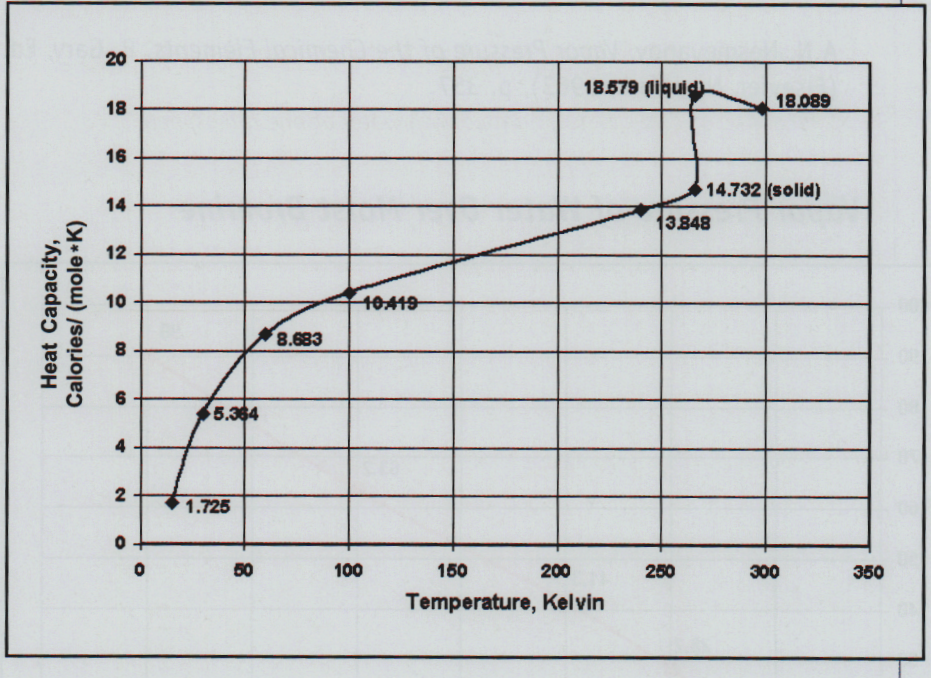

Vapor Pressure of Liquid Bromine

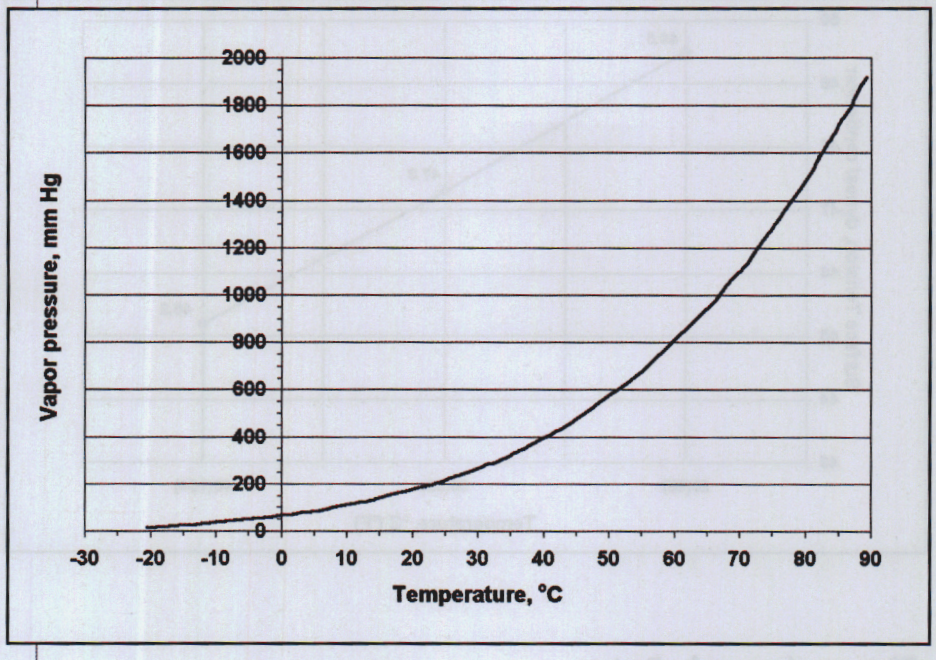

A.N. Nesmeyanov, *Vapor Pressure of the Chemical Elements*, R. Gary, Ed. (Elsevier, New York, 1963), p. 357.

Vapor Pressure of Water Over Moist Bromine

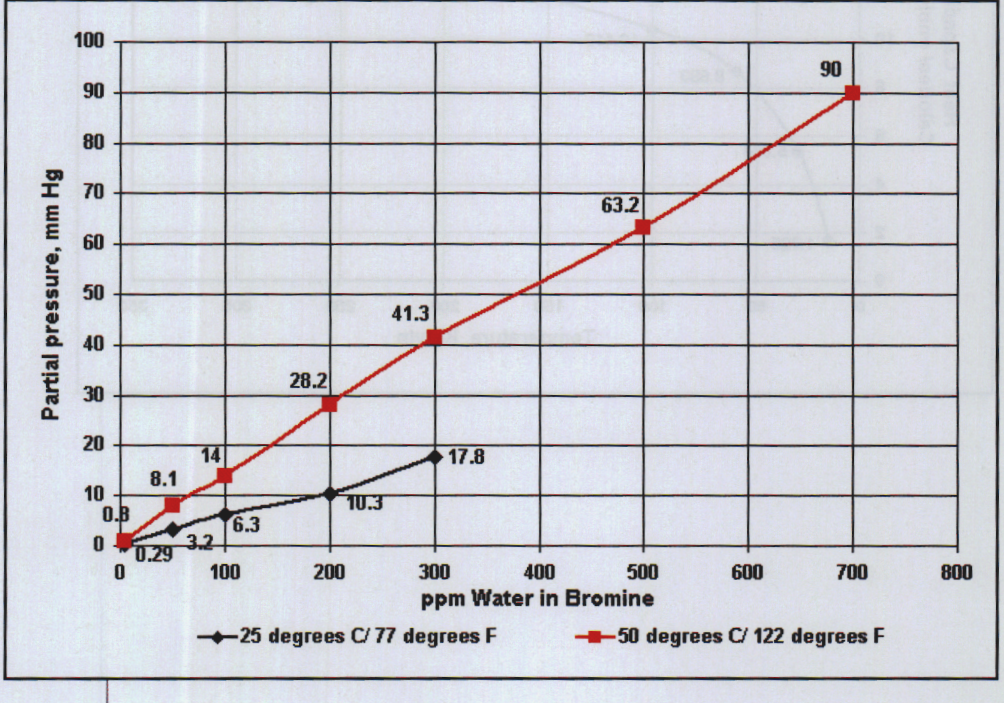

Viscosity

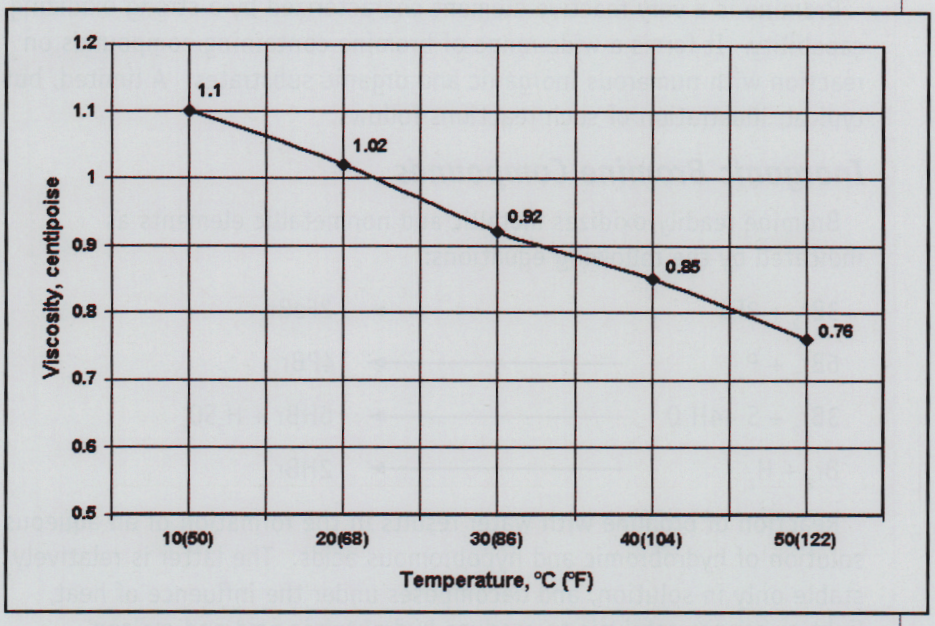

Note: *The physical properties listed in this section are laboratory results for bromine and are not necessarily Great Lakes specifications.*

Chemical Reactions

Bromine is a very reactive element characterized by a strong oxidizing capability. It forms a wide range of bromine containing compounds on reaction with numerous inorganic and organic substrates. A limited, but typical, illustration of such reactions follows.

Inorganic Bromine Compounds

Bromine readily oxidizes metallic and nonmetallic elements as indicated by the following equations:

$$3Br_2 + 2Fe \longrightarrow 2FeBr_3$$

$$6Br_2 + P_4 \longrightarrow 4PBr_3$$

$$3Br_2 + S + 4H_2O \longrightarrow 6HBr + H_2SO_4$$

$$Br_2 + H_2 \longrightarrow 2HBr$$

Reaction of bromine with water results in the formation of an aqueous solution of hydrobromic and hypobromous acids. The latter is relatively stable only in solution, and decomposes under the influence of heat, light or copper catalysis to produce hydrobromic acid and oxygen.

$$Br_2 + H_2O \rightleftharpoons HBr + HOBr$$

Reactions of bromine and ammonia occur readily, and depending upon temperature and pressure, produce nitrogen and hydrogen bromide, bromamines, and ammonium bromide. The ammonium bromide forms as a result of the reaction between hydrogen bromide and excess ammonia present.

With strong alkalis at low temperatures in aqueous solutions, bromine reacts to produce bromide and hypobromite salts.

$$Br_2 + 2\,NaOH \longrightarrow NaBr + NaOBr + H_2O$$

At elevated temperatures, the hypobromite undergoes an oxidation-reduction reaction to produce bromate and bromide salts.

$$3\,NaOBr \longrightarrow NaBrO_3 + 2NaBr$$

The balanced summation of these two reaction equations yields:

$$3\,Br_2 + 6\,NaOH \longrightarrow 5\,NaBr + NaBrO_3 + 3\,H_2O$$

Some typical oxidation-reduction reactions of bromine with inorganic compounds under alkaline or acidic conditions are illustrated in the following reactions:

$$Br_2 + H_3PO_3 + 3NaOH \longrightarrow NaH_2PO_4 + 2NaBr + 2\,H_2O$$

$$Br_2 + 2KI \longrightarrow 2KBr + I_2$$

$$Br_2 + NaNO_2 + H_2O \longrightarrow NaNO_3 + 2HBr$$

$$2Br_2 + FeSO_4 + 8\,NaOH \longrightarrow Na_2FeO_4 + Na_2SO_4 + 4NaBr + 4H_2O$$

$$Br_2 + 2FeSO_4 + H_2SO_4 \longrightarrow Fe_2(SO_4)_3 + 2HBr$$

Organic Bromine Compounds

The reactions of bromine with organic compounds may occur in a variety of ways. Typically, they involve:

1. The addition of bromine to unsaturated hydrocarbons such as

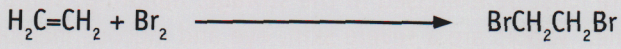

2. The substitution of hydrogen on the organic substrate such as:

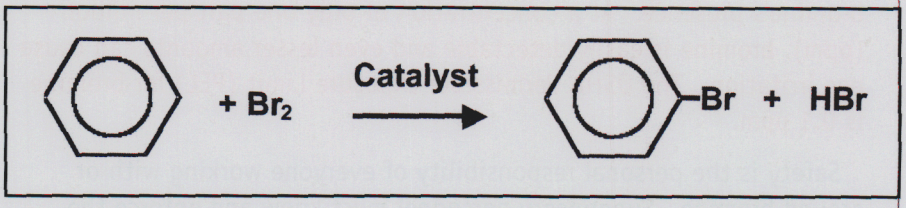

Reactions can be achieved under a variety of conditions: in liquid or vapor phase, and in the presence or absence of solvents or catalysts. Carbon tetrachloride, chloroform and other halogenated solvents, acetic acid and other lower aliphatic acids and hydrobromic acid are typically used as solvents. Lewis acid catalysts frequently are employed in the substitution bromination of aromatics and light or peroxide catalysts in the bromination of aliphatics. The choice of catalyst often dictates the course of a reaction.

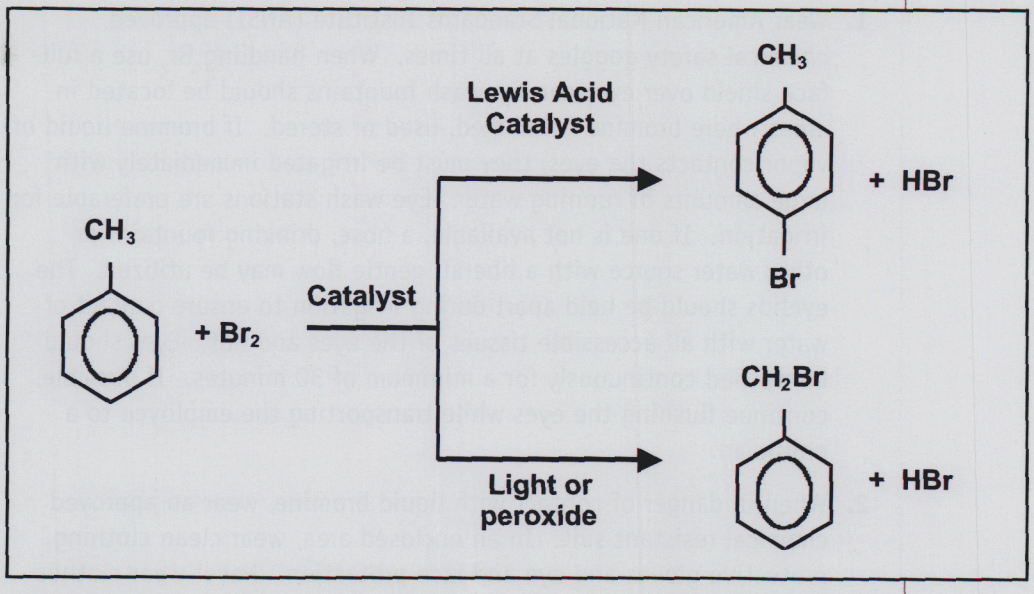

Some organic bromine compounds are best prepared indirectly by the reaction of other functional groups with bromine derivatives. For example, alkyl bromides, such as methyl bromide, are best prepared by reaction of the corresponding alcohol with hydrogen bromide. Alkyl bromides can also be prepared by the reaction of HBr with olefins.

Procedures for the Safe Handling of Bromine

Extreme care must be exercised in the storage, handling, shipping and use of bromine. Vapors are a severe skin, eye and mucous membrane irritant. Contact with liquid bromine can cause severe burns. The readily identifiable color and pungent odor gives immediate warning of bromine's presence. At a concentration of only one part per million (ppm), bromine is easily detectable and even lesser amounts can cause eye irritation. The OSHA Permissible Exposure Limit (PEL) for bromine is 0.1 ppm.

Safety is the personal responsibility of everyone working with or around bromine. Supervisory personnel must know and enforce the recommended safe handling practices outlined in this manual. Every Great Lakes employee and contract employee is safety trained at the time of employment and up-dated on safety procedures monthly. We recommend the same policy for our customers and anyone else using and handling bromine.

Personal Safety Precaution Recommendations

1. Wear American National Standards Institute (ANSI) approved chemical safety goggles at all times. When handling Br_2 use a full-face shield over eyewear. Eyewash fountains should be located in areas where bromine is handled, used or stored. If bromine liquid or vapor contacts the eyes, they must be irrigated immediately with large amounts of running water. Eye wash stations are preferable for irrigation. If one is not available, a hose, drinking fountain, or other water source with a liberal, gentle flow may be utilized. The eyelids should be held apart during irrigation to ensure contact of water with all accessible tissues of the eyes and lids. Eyes should be washed continuously for a minimum of 30 minutes. If possible, continue flushing the eyes while transporting the employee to a physician.
2. When in danger of contact with liquid bromine, wear an approved chemical resistant suit. In an enclosed area, wear clean clothing, protective gloves and eye and face protection. Never wear clothes that smell of bromine. Wash contaminated clothing and equipment before reuse.

3. Wear leather or other non-woven ANSI approved steel-toed shoes. Protective rubber boots should be worn over shoes for extra protection. Discard shoes that have been in contact with liquid bromine.

4. For skin contact, the affected area should be flooded immediately with large amounts of water from a safety shower or other source of flowing water. All contaminated clothing, including shoes, should be removed as quickly as possible while the victim is under the shower. Washing should be continued for a minimum of 30 minutes. The victim should receive medical attention as soon as possible. (Extended wash times of two hours or more have proven beneficial.)

5. To insure adequate personnel protection, periodically inspect and repair all protective clothing and equipment.

6. **To avoid bromine ingestion:**

    a) Always wash face, hands and arms before eating.
    b) Never place bromine contaminated articles in the mouth.
    c) Don't siphon or blow out clogged lines or nozzles by mouth.

7. **To avoid inhalation of bromine:**

    a) Stay upwind when loading, unloading and transporting bromine.
    b) Have NIOSH approved respirators and self-contained breathing apparatus available.
    c) When handling bromine in an enclosed area wear protective clothing and respiratory equipment.
    d) Adhere to your plant regulations regarding respiratory equipment for bromine handling.

8. Bromine is so painful to the eyes, nose and throat that it gives ample warning of its presence in acutely hazardous concentrations. If overexposure does occur, the victim should be immediately removed from the contaminated area to fresh air. The victim should be placed in a comfortable position. Usually, that will be a sitting or partly reclining position. The exposed individual should avoid exertion. If vomiting occurs, turn the patient on his side to avoid choking. Keep the patient warm. If the patient does not recover quickly or is coughing and showing signs of respiratory distress, properly trained personnel should administer oxygen. If respiration has ceased, artificial respiration should be administered. The victim should receive medical attention as soon as possible.

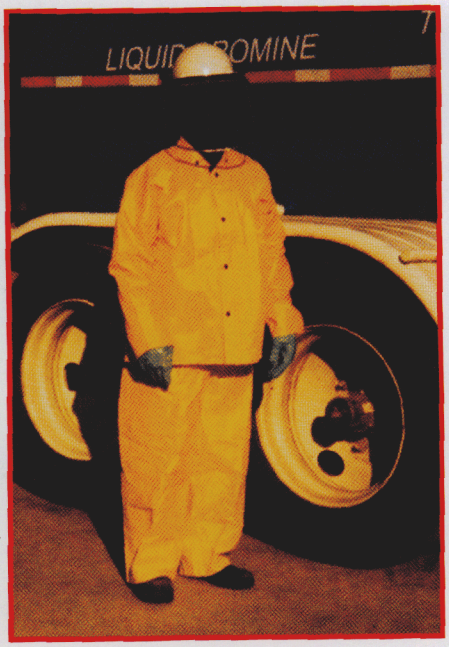

Personal Protective Clothing and Equipment

Respiratory Equipment

1. For escape only, provide either a 5-minute air bottle with hood, a mouthpiece respirator with acid cartridge, or a full face or half mask respirator with chemical cartridges. Refer to manufacturer recommendations for proper NIOSH approved cartridge.

2. For work in an enclosed or a poorly ventilated area, NIOSH approved pressure demand self-contained breathing apparatus or pressure hose and masks with egress bottle are used.

3. All respiratory equipment must be carefully maintained and stored in accordance with manufacturer's instructions.

Clothing

The protective clothing shown is the recommended minimum protection that should be worn where bromine is handled.

Coveralls & Jacket
PVC

Face Shield
Polycarbonate

Goggles
Chemical Splash Resistant

Boots
PVC Blend Boots

Gloves
100% Nitrile rubber gloves

Safety Practices in the Work Area

General Instructions

1. Read and follow all directions and warning labels carefully.
2. Inform all personnel of the potential hazards of contact with bromine and train them in appropriate first-aid procedures.
3. Store and handle bromine over drip pans drained by a sump that is vented to a scrubber system.
4. Bromine handling areas should be clearly marked and restricted to qualified, trained personnel only.
5. Maintain uncontaminated equipment, floors and work areas. As routine maintenance, periodically scrub floors.
6. Immediately contain and clean up all bromine spills.
    a) Wear approved respiratory equipment and protective clothing.
    b) Carefully release anhydrous ammonia vapor to neutralize bromine vapors in the air. ***Ammonia (16 to 25% by volume) can form an explosive mixture with air.***
    c) Pour soda ash solution or hypo solution on the liquid bromine to neutralize.
    d) Using cold water, wash neutralized bromine to a sump for disposal.
    e) Open doors and windows to ventilate.
7. Avoid contact of bromine with strong reducing agents, strong alkalis, metals, wood, paper products, fabric, grease and oil or other combustible materials.

Ventilation

1. Restrict bromine vapor concentration in the work area to less than 0.1 ppm with adequate exhaust hoods, ventilation systems and scrubbers. Analyze air for proper control.
2. Transfer or repackage bromine only in a controlled, closed environment.
3. Exhaust ventilating systems must be used in enclosed areas where bromine is handled.

Containers and Storage

1. Empty shipping containers completely.
2. Never put water in steel bromine cylinders except as instructed in the cylinder decontamination procedures.
3. **Do not return used or recycled bromine or other bromine containing liquids to Great Lakes Chemical drums or cylinders. This can lead to serious corrosion of the drums and cylinders and result in eventual failure.**
4. Store bromine in a dry, well-ventilated area, protected from moisture and excessive heat or cold.
5. Store only in standard containers, **never** in those that resemble food or beverage packaging.
6. Check all equipment used for bromine handling or processing for deterioration and leaky valves and couplings. Bromine handling equipment must be made of or lined with Kynar®, Halar®, Teflon®, Monel®, Pyrex® glass, glass-lined steel or lead-lined steel. Proper maintenance requires periodic cleaning, flushing with large quantities of water, and drying with nitrogen.
7. Protect bromine-handling equipment from strong alkalis, reducing agents, other metals, wood, fabric, paper, grease and oils.

*Halar and Kynar are registered trademarks of the Elf Atochem Corporation.
*Teflon is a registered trademark of the Dupont Company.
*Monel is a registered trademark of the Inco Corporation.
*Pyrex is a registered trademark of Corning Glass.

Fire Precautions

1. Always wear a self-contained breathing apparatus around bromine or bromine-containing compounds in a fire.
2. Bromine does not burn, but it is a strong oxidizer and will react violently with aluminum, titanium, mercury, sodium and potassium.
3. Wood, paper products, fabric, petroleum products, plastics and other organics may spontaneously combust in the presence of liquid bromine, which is a powerful oxidizer.
4. Dry bromates (products of sodium hydroxide neutralization of bromine) are powerful oxidants and are shock sensitive. They must be handled with extreme care.

Bromine Handling for Laboratory Use

General Instructions

All personnel using bromine in a laboratory should be properly trained regarding its characteristics, PPE, equipment requirements and first aid procedures. Refer to the MSDS for additional information.

Equipment

1. Air purifying cartridge respirator with proper acid gas or organic vapor/acid gas cartridge(s). (Only to be used as an evacuation aid.)
2. Operational safety shower and eyewash.
3. 10-25% aqueous NaOH or hypo solution for spills.
4. Aqueous ammonium hydroxide placed in large surface area dishes to liberate NH_3. **(Do not add directly to liquid bromine.)**
5. Safety glasses with side shields/chemical safety goggles.
6. Face shield.
7. Neoprene gloves and apron, boots and gauntlet sleeve protectors. (Chemical resistant suits are optional for maximum protection.)

Storage and Transport

1. Bromine should be stored in a properly operating fume hood or well-ventilated cabinet in glass bottles with Teflon®-lined caps. Store in a cool, dry place where freezing, heat and humidity and moisture exposure possibilities are minimal.
2. Secondary containment pans with high sides or rubber bottle carriers should be used as a precautionary measure. Second skin plastic coated bottles are also recommended as a safe guard.
3. Bromine bottles should be transported in rubber bottle carriers or a closed container that is sufficiently padded to avoid bottle breakage.

Handling Precautions

1. Bromine should be handled by trained individuals. Proper PPE should be worn at all times when handling bromine. Bromine transfer and handling should be done in a fume hood.
2. Proper fume hood operation should be checked prior to use. Sufficient bromine vapor scrubbing measures should be taken (i.e. caustic scrubber or other suitable material). Do not vent bromine vapors directly to the atmosphere.
3. Small quantities of bromine can be transferred by pouring, but larger volumes should be transferred using a laboratory scale pump of proper materials of construction.

4. Due to the dense nature of liquid bromine, lab glassware such as receivers (graduated cylinders or flasks) or addition funnels for reactors should be clamped and stabilized to avoid breakage and spills.

Neutralization of Laboratory Bromine Waste Streams

Physical Hazards/Properties

Neutralization of bromine is extremely exothermic. It should be done slowly with sufficient external cooling capacities. Proper materials of construction of all equipment should be observed. Bromine is a strong oxidizer that reacts with some metals and is incompatible with many elastomers and plastics.

All considerations regarding the safety and handling of bromine should be observed when neutralizing bromine waste. Equipment guidelines and first aid procedures for the handling of bromine should be followed.

Apparatus

Assemble, in a fume hood, a 5 L 3-neck round bottom flask supported at the base and the neck. Equip the flask with a sufficient cooling bath, mechanical stirrer and a water-cooled or air-cooled condenser vented to a sodium hydroxide scrubber system. Neutralization of bromine waste on a scale larger than that described here is not recommended.

Stoichiometry

Neutralization with sodium bisulfite requires 3 moles of sodium hydroxide: 1 mole sodium bisulfite: 1 mole bromine.

Neutralization with sodium sulfite requires 2 moles sodium hydroxide: 1 mole sodium sulfite: 1 mole bromine.

The weights and volumes specified include a 10% excess of sodium hydroxide and sodium bisulfite or sodium sulfite. This excess should be observed.

This neutralization procedure is designed to assure that the final waste stream has been completely neutralized with respect to acidity and oxidation potential. It is also designed for safety and operational handling concerns in a laboratory setting.

Chemistry

$$Br_2 + Na_2SO_3 + 2NaOH \longrightarrow 2NaBr + Na_2SO_4 + H_2O$$
$$Br_2 + NaHSO_3 + 3NaOH \longrightarrow 2NaBr + Na_2SO_4 + 2H_2O$$

Neutralization with Bisulfite (based on 100 ml bromine)

1. Add 2.5 L (2500 ml) of tap water to the flask.
2. **Slowly add with cooling and agitation**, 345 ml of 50% sodium hydroxide (NaOH). (Note: Adjust water charge to achieve target concentration of 2.3 M NaOH if less concentrated sodium hydroxide solution is used).
3. Add 224g sodium bisulfite while stirring.
4. Continue stirring until most of the solids dissolve.

Neutralization with Sulfite (based on 100 ml bromine)

1. Add 2.5 L (2500 ml) of tap water to the flask.
2. **Slowly add with cooling and agitation**, 230 ml of 50% sodium hydroxide (NaOH). (Note: Adjust water charge to achieve target concentration of 1.6 M NaOH if less concentrated sodium hydroxide solution is used).
3. Add 271g sodium sulfite while stirring.
4. Continue stirring until most of the solids dissolve.

Procedure

Be aware that organic or metal impurities may change normal characteristics of neutralization, i.e. color changes, foaming, etc.

1. **Slowly**, with cooling, add 100 ml of bromine using a clamped addition funnel or pump and graduated cylinder. The addition rate should be slow enough to allow for color dissipation and temperature control below 50°C (122°F).
2. When addition is complete, allow the flask to cool to room temperature.

3. Check the contents with starch KI paper and pH paper to make sure no oxidizer is present and that pH is > 7. Solution should be colorless. If color persists, slowly add more sodium hydroxide/ sodium bisulfite (sulfite) solution.
4. When neutralization is complete, filter off any insoluble material and separate any organic phases. Sodium bromide precipitate can be dissolved in water. The resulting solution should be 11 to 12% sodium bromide. This solution should be disposed of properly as a waste stream.

Emergency Procedures

In case of bromine emergencies, follow recommended first aid and emergency response procedures and call Great Lakes Chemical Corporation and Chemtrec for further instructions.

- ***Great Lakes Emergency Response Team***
  1-800-949-5167
- ***from outside North America***
  +870-862-5141
- ***CHEMTREC 1-800-424-9300***
- ***CHEMTREC (District of Columbia only)***
  483-7616
- ***Technical Service Help-Line***
  800-378-9451

Transportation Emergencies

In emergency situations resulting from vehicle accidents:

1. Notify the local police, fire departments, emergency responders and the carrier.
2. Isolate the area.
3. Any person not dressed in proper protective clothing and not using a NIOSH approved self-contained breathing apparatus should be kept a safe distance away.
4. Call Chemtrec and/or Great Lakes Chemical Corporation for advice as to further actions.
5. Seek immediate medical assistance for those injured and follow recommended first aid procedures.

Leaking Containers

1. When handling a leaking bottle, drum or cylinder of bromine, personal protective clothing, goggles and NIOSH approved self-contained breathing equipment must be worn.
2. Clear contaminated area of non-essential personnel.
3. Maintain a slight ammonia atmosphere throughout the clean up. Carefully release anhydrous ammonia gas to neutralize bromine vapor. The ammonia gas will convert bromine to white ammonium bromide "smoke." ***Do not allow liquid bromine and liquid ammonia to combine; a violent reaction will occur. Ammonia (16 to 25% by volume) can form an explosive mixture with air.***
4. Pour hypo solution*, lime and water slurry or soda ash solution over the spill. Hypo-bromine reactions produce hydrobromic acid. ***Dry sodium thiosulfate and liquid bromine produce a violent reaction; do not mix them.***
5. Using cold water, wash neutralized bromine into a sump for transfer to an approved waste disposal facility where the waste can be processed.
6. Ventilate the area to remove the ammonium bromide and any bromine fumes. Scrub the floors and equipment with soap and water.

Immediately alert federal, state and local authorities if a bromine release leaves the plant site and exceeds 500 pounds. Call the National Response Center at 1-800-424-8802 and call Great Lakes Chemical Corporation to report the spill at 1-800-949-5167.

Recovery and Salvage

1. Remove undamaged containers and store for inspection later.
2. Under the advice and/or supervision of Great Lakes Chemical Corporation, transfer remaining bromine into other containers. If the accident involves a tanker, Great Lakes Chemical Corporation personnel using special corrosion-resistant pumps may transfer the remaining bromine to another tanker.

Cleaning up the Contaminated Area

1. Spread hypo solution*, soda ash solution or lime slurry over the affected area.
2. Scrub the area well, and using cold water, wash the neutralizing solution to a sump for transfer to an approved waste facility for processing.

3. Use hot soapy wash water and large quantities of rinse water to clean equipment. Dispose of this waste in the same manner as described above.
4. Replace any porous materials, fabric, leather, wood and paper products, which have been in contact with bromine.

Cleaning Undamaged Containers

1. If the container is tightly sealed and there appears to be no danger of contaminating the liquid inside, pour hypo solution* over the affected areas.
2. Wash with water and dry completely. Should markings and labels be illegible, call Great Lakes Chemical Corporation for new labels.

Fire

1. In case of fire, notify the fire department and emergency responders immediately and evacuate the area.
2. Everyone should move a safe distance from the fire, upwind of the smoke.
3. Notify Great Lakes Chemical Corporation at 1-800-949-5167.
4. Wearing self-contained breathing equipment, fire fighters should cool bromine containers with water, fog or foam.
5. Any spilled bromine should be neutralized with hypo solution*. Bromine is a powerful oxidizer; therefore, care should be taken to keep bromine away from other materials.

---

* ***Hypo Solution:*** *Dissolve 57 pounds of sodium thiosulfate and 1 pound of soda ash in 85 gallons of water.*

Bromine First Aid

How to Recognize Bromine Overexposure

Because bromine is highly irritating to the eyes, nose and mucous membranes, overexposure is unlikely to occur. However, if overexposure occurs, symptoms include: excessive tearing, redness and irritation of the eyes, throat, and nose, severe skin burns and, with prolonged, unprotected exposure, respiratory damage and respiratory arrest.

First Aid for Bromine Exposure

1. Immediate medical assistance is required if bromine is swallowed, inhaled or has contacted the eyes or skin.
2. If bromine has been ingested, do not give anything by mouth. Seek medical attention immediately. Do not induce vomiting.
3. If bromine has been inhaled, move the exposed person to a well-ventilated area. Seek medical attention immediately. The victim should be placed in a comfortable sitting or partly reclining position. The exposed individual should avoid exertion. If vomiting occurs, turn the patient on his side to avoid choking. Keep the patient warm. If the patient is coughing and showing signs of respiratory distress, properly trained personnel should administer oxygen.
4. For skin contact, the affected area must be flooded immediately with large amounts of clean water from a safety shower or other appropriate source of flowing water. Seek medical attention immediately. All contaminated clothing, including shoes, should be removed as quickly as possible while the victim is under the shower. Washing should be continued for a minimum of 30 minutes. If possible, continue to wash the affected area during transport to medical facilities. (Extended wash times of two hours or more have proven beneficial.)
5. If bromine liquid or vapor contacts the eyes, they must be irrigated immediately with large amounts of running water. Eye wash stations are preferable for irrigation. If one is not available, a hose, drinking fountain, or water source with a liberal, gentle flow may be utilized. The eyelids must be held apart during irrigation to ensure contact of water with all accessible tissues of the eyes and lids. Eyes should be washed continuously for a minimum of 30 minutes. If possible, continue flushing the eyes while transporting the employee to a physician.

In all cases of bromine injury, obtain immediate medical attention. Provide emergency personnel with information about all materials used by the person and provide appropriate information about bromine and first aid procedures.

Toxicology

Bromine is a very strong oxidant. It is extremely toxic and may prove fatal if inhaled or swallowed. Severe burns may result from skin contact, and contact with the eyes may cause blindness. Bromine is extremely destructive to tissue of the mucous membranes and upper respiratory tract. Bromine exposure may result in spasm, inflammation and edema of the larynx and bronchi, chemical pneumonitis and pulmonary edema. Low concentrations of bromine vapor cause irritation, tearing and inflammation of the eyes. At higher concentrations blepharospasm and photophobia develop and a splash in the eyes causes severe burns and/or blindness. Soft tissue burns may be deep and very slow to heal.

Engineering Materials Recommendations

Great Lakes Chemical Corporation's bromine is shipped with water content of less than 30 parts per million. However, bromine is hygroscopic and if improperly handled, water content can quickly increase to 300 parts per million. As the water content increases, so does the corrosive potential of bromine. Therefore, the storage of bromine under dry nitrogen or dry air (dewpoint less than -40°C/ -40°F) is necessary. Bromine with water content of less than 30 parts per million is non-corrosive to many non-ferrous metals including lead, nickel, tantalum, Hastelloy® B, Hastelloy® C, and Monel®. *Bromine is extremely reactive with titanium and aluminum, and contact with these metals must be avoided.* Glass lined steel and ceramic materials (excluding carbon and graphite) are resistant to bromine. Do not use ordinary polymeric resins with bromine. However, fluoro-polymers such as Kynar®, Halar®, Kalrez® and Teflon® are acceptable.

Lead

Lead and lead-lined steel are commonly used, versatile materials for in-process equipment and storage containers for dry bromine. A protective layer of lead bromide (which can be washed away by inorganic acids) forms on the interior of the vessel, making it suitable for use with bromine of up to 75 parts per million water, at room temperature. If bromine contains less than 30 parts per million water, it may be handled in lead equipment to 58.8°C (137.8°F).

Lead-lined steel vessels used for bromine storage must be constructed and/or modified by certified personnel in accordance with ASTM standards. Solid Teflon® or Teflon®-envelope flange connection gaskets must be used.

Nickel and Nickel Alloys

Nickel, Monel®, Hastelloy® B and Hastelloy® C containers are appropriate *only* for storage and handling of bromine with less than 30 parts per million water at room temperature. Nickel may be used with dry (less than 30 ppm water) bromine up to 400°C (752°F).

Tantalum

Tantalum equipment can be used for bromine, wet or dry, in temperatures of up to 149°C (300°F). However, in the presence of some organic materials, bromine will corrode tantalum.

Steel and Stainless Steel

Bromine and its vapors are severely corrosive to steel and stainless steel making them unacceptable for use in bromine process systems.

Glass and Ceramics

Although inherently fragile, tempered glass, porcelain, fused silica, chemical stoneware and acid brick are acceptable materials for use with both wet and dry bromine at various temperatures.

Glass-Lined Steel

Due to its excellent chemical resistance and physical strength, glass-lined steel makes a versatile construction material for use with bromine.

Glass-lined steel equipment must withstand a 20,000 volt spark test and can be used at temperatures up to 138°C (280°F).

Plastics

Fluorinated plastics such as Teflon®, Kalrez®, Halar® and Kynar® are resistant to bromine and are used in valves, piping, gaskets and linings. Gaskets sheathed in Teflon® and steel or FRP lined with Kynar®, Halar® or Teflon® are acceptable for use in bromine distillation columns, other process equipment and scrubbers. **Plastics other than those mentioned here are not acceptable for use with bromine.**

Lubricants

Lubricants are not recommended. Use non-lubricated valves lined or sleeved with Teflon®.

**Kynar and Halar are registered trademarks of the Elf Atochem Corporation.*
**Kalrez is a registered trademark of Dupont Dow Elastomers.*
**Teflon is a registered trademark of the Dupont Company*
**Monel is a registered trademark of the Inco Corporation.*
**Hastelloy is a registered trademark of Haynes International.*

Storage Method Recommendations

In the laboratory: Bromine for laboratory or pilot plant use is usually purchased in glass bottles. Pour or pump bromine into small glass, ceramic or lead feed vessels with Teflon® stopcocks.

For use in bulk: Store drum, tank truck or carload quantities of bromine in lead or lead-lined steel tanks, which feed to the process or reaction. For larger storage vessels where bottom outlets cannot be used, pump bromine out of the tank with nickel, Kynar® or Teflon® pumps. Contact Great Lakes Chemical Corporation for specific recommendations.

Protect storage tanks from moisture or humid air. Bromine will absorb moisture from the air. When exposed to air having a normal summer dew point of 5-10°C (40-50°F), bromine will equilibrate at about 70-80 parts per million water. Bromine this wet can cause severe corrosion of many metals. Keep a slight positive pressure (0.1 inch of H_2O) on the storage tanks by purging with dry (-40°C/ -40°F dew point) air or nitrogen into the tank.

For bulk storage of bromine, either a glass-lined steel or lead-lined steel storage tank, properly designed for bromine's weight is acceptable. In active seismic areas, glass-lined steel tanks are not advised. Stored bromine must be protected from temperatures below -7°C (20°F) to prevent freezing. Storage tanks should be located in concrete paved and diked areas so that any leak or spill can be contained.

Shipping Containers

Glass Bottles

Great Lakes Chemical Corporation supplies bromine in 13 pound (net weight) glass bottles. These bottles are sealed with a tamper-evident, fiber-lined, Teflon®-faced, plastic screw cap. Packed four to a case, these bottles of bromine are placed in a compartmentalized expanded polystyrene inner carton. The printed outer carton consists of two individual corrugated cardboard boxes separated by a plastic bag. When removing bromine from glass bottles, pour or pump into small glass, ceramic or lead feed vessels with Teflon® stopcocks.

Storage

Store bottles, in their cartons, in a cool, dry location, away from direct sunlight and protected from the weather. Storage temperatures must not fall below -7°C (20°F), the freezing point of bromine.

Drums

The 14 gauge Monel® drum used by Great Lakes Chemical Corporation has a ten-gallon capacity and holds 225 pounds of liquid bromine. The

two openings in the drum, 2 inches and 3/4 inch, close with continuous thread, Teflon® gasket plugs. The larger opening has 2 inch NPS 8 TPI threads. The 3/4" opening has 3/4 inch NPS 14 TPI threads. The foot rings on these drums have drain holes but it is important that they be protected from moisture. The 2-inch plug is tightened to 40 ft pounds of torque and the 3/4 inch plug is tightened to 20 ft pounds of torque when shipped.

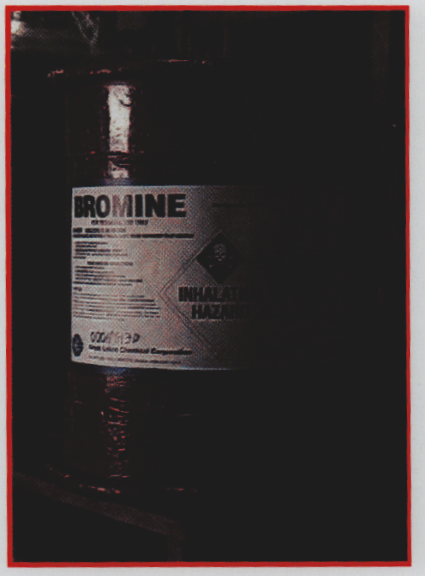

Storage

Store drums, empty or full, upright and inside, in a cool (above -7°C/ 20°F), dry, place. Exposing drums to heat will cause dangerous pressure to develop. Severe corrosion occurs if the drums are exposed to moisture. Do not expose to rough handling. **Never return bromine to these drums, due to the potential for contamination and corrosion.** When stored over extended periods, periodically inspect drums, bungs and gaskets.

Bromine Drum Unloading Pump Method

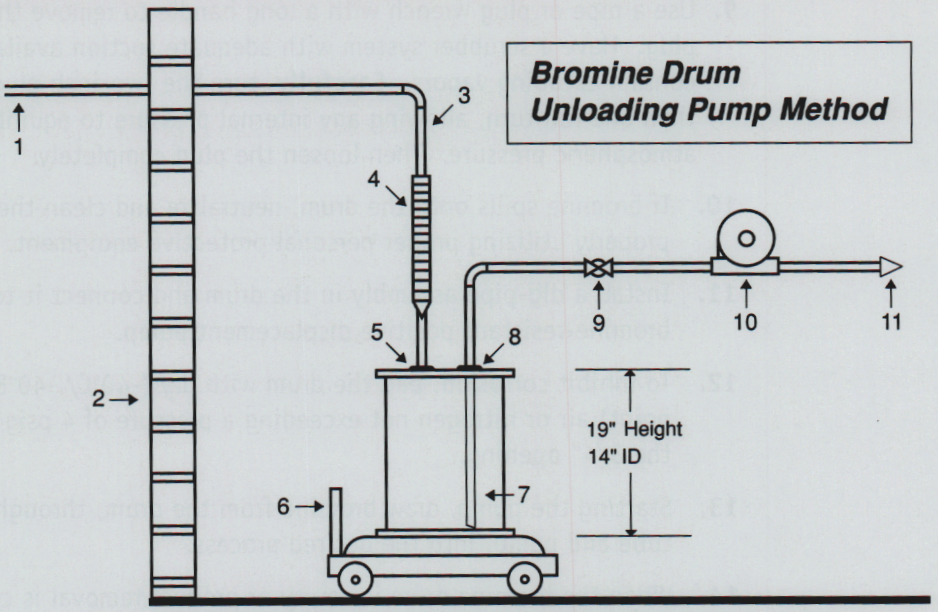

1. 1/2" Kynar® Vent from Outside
2. Building Wall
3. 1/2" Kynar® or Monel® Line
4. Dryer – 2" x 12" Pyrex® with Drierite® or Silca-Gel Packing
5. 3/4" Monel® Bushing
6. Scale
7. Dip Tube – 1/2" Kynar® or Monel® Pipe - Hold Approximately 1/4" off bottom (Bevel End)
8. 2" x 1/2" Bushing
9. 1/2" Kynar® Ball Valve
10. Positive Displacement Pump
11. 1/2" Kynar® or Monel® Piping to Bromine User

Unloading - Pump Method Recommendations

1. Personal protective equipment is required.
2. Have anhydrous ammonia cylinder or aqueous ammonia for vapors, soda ash or hypo to neutralize spills and plenty of water on hand.
3. Before handling, check for damage or leakage. Set aside any damaged drums for special handling.
4. Tighten any loose plugs.
5. Use proper lifting equipment to move unopened drums.
6. If drums are warm to the touch, do not open. Allow them to cool to ambient temperature.
7. Equip an ammonia cylinder with a flexible hose. Should a leak occur, carefully open the valve, releasing ammonia that will neutralize the bromine vapors. This must be cautiously done; ***ammonia can form an explosive mixture with air and is an inhalation hazard.***
8. Use the pump method unloading system schematic as a guide.
9. Use a pipe or plug wrench with a long handle to remove the drum plug. Have a scrubber system with adequate suction available to contain escaping vapors. **Carefully**, turn the two-inch plug no more than one full turn, allowing any internal pressure to equilibrate with atmospheric pressure. Then loosen the plug completely.
10. If bromine spills onto the drum, neutralize and clean the spill properly utilizing proper personal protective equipment.
11. Install a dip-pipe assembly in the drum and connect it to a bromine-resistant positive displacement pump.
12. To inhibit corrosion, pad the drum with dry (-40°C/ -40°F dew point) air or nitrogen not exceeding a pressure of 4 psig through the 3/4" opening.
13. Starting the pump, draw bromine from the drum, through the dip tube and pump, into the desired process.
14. When the bromine drum is empty or product removal is completed, disconnect the dip pipe assembly from the pump and remove it from the drum.
15. Re-seal the empty or partially filled drum. Check to see that all gaskets are in place. Replace the plugs, making sure that threads are straight, and tighten the plugs securely.
16. If the drum is empty, label the drum "Empty" and contact Great Lakes Chemical Customer Service to return it to Great Lakes Chemical Corporation.

Do not return used or recycled bromine or other bromine containing liquids to Great Lakes Chemical drums or cylinders. This can lead to serious corrosion of the drums and cylinders and result in eventual failure.

Bromine Drum Unloading Pressure Method

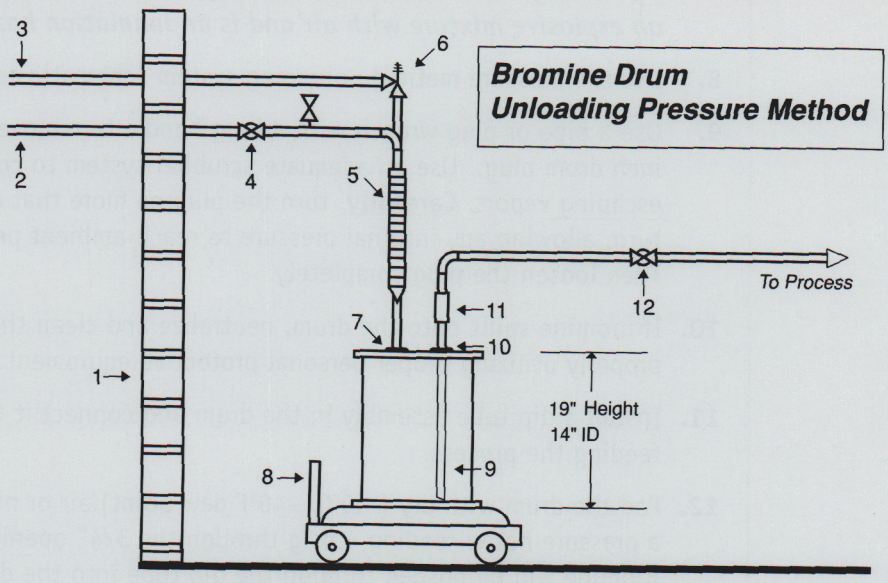

1. Building Wall
2. Dry Air (-40°C/ -40°F dew point) or nitrogen not to exceed 4 PSIG
3. 1/2" Kynar® Pipe Vent to Atmosphere
4. 1/2" Ball Valve
5. Dryer 2" x 6" Pyrex® with Drierite® or Silica-Gel Packing
6. Pressure Relief Valve
7. 3/4" Monel® bushing
8. Scale
9. Dip Tube – 1/2" Kynar® or Monel® Pipe—Hold Approximately 1/4" off Bottom. (Bevel End)
10. 2" x 1/2" Monel® Bushing
11. 1/2" Union
12. 1/2" Ball Valve

Unloading - Pressure Method Recommendations

1. Personal protective equipment is required.
2. Have anhydrous ammonia cylinders or aqueous ammonia, soda ash or hypo for neutralizing spills and plenty of water on hand.
3. Before handling, check for damage or leakage. Set aside any damaged drums for special handling.
4. Tighten any loose plugs.
5. Use proper lifting equipment to move unopened drums.
6. If drums are warm to the touch, do not open. Allow them to cool to ambient temperature.

7. Equip an ammonia cylinder with a flexible hose for use should a bromine vapor leak occur. Bromine vapors are neutralized by ammonia gas. This must be cautiously done; ***ammonia can form an explosive mixture with air and is an inhalation hazard.***
8. Use the pressure method unloading system schematic as a guide.
9. Use a pipe or plug wrench with a long handle to remove the two-inch drum plug. Use an adequate scrubber system to contain the escaping vapors. **Carefully**, turn the plug no more that one full turn, allowing any internal pressure to reach ambient pressure. Then loosen the plug completely.
10. If bromine spills onto the drum, neutralize and clean the spill properly utilizing proper personal protective equipment.
11. Install a dip tube assembly in the drum and connect it to the pipe feeding the process.
12. Pad the drum with dry (-40°C/ -40°F dew point) air or nitrogen to a pressure not exceeding 4 psig through the 3/4" opening. Bromine will be pushed through the dip tube into the desired process.
13. When the bromine drum is empty or product removal is completed, disconnect the dip pipe assembly from the process feed pipe and remove it from the drum.
14. Reseal the empty or partially filled drum. Check to see that all gaskets are in place. Replace the plugs, making sure that the threads are straight, and tighten the plugs securely.
15. If empty, label the drum "Empty" and return the drum to Great Lakes Chemical Corporation.

Do not return used or recycled bromine or other bromine containing liquids to Great Lakes Chemical drums or cylinders. This can lead to serious corrosion of the drums and cylinders and result in eventual failure.

Cylinders

Great Lakes Chemical Corporation offers bromine in non-returnable 120-gallon steel cylinders. An empty cylinder weighs approximately 315 pounds and will hold 2,800 pounds of bromine. It is made to be used upright and has top-lifting lugs. Handle this container with a standard 4,000-pound rated capacity fork truck.

Our cylinder is economical for those customers who have no demand for bulk shipments. However, because iron bromide forms during transportation, the cylinders may have up to 200 parts per million soluble iron as compared to one part per million for Great Lakes Chemical Corporation bromine shipped in other containers.

Great Lakes Chemical Corporation can assist with the design of cylinder delivery systems that meet the needs of individual customer plant locations. Contact a Great Lakes' Sales Representative with inquiries.

STORAGE

Store bromine cylinders, full or empty, upright and indoors, in a cool, dry location. Place out of direct sun to avoid overheating, which causes internal pressure to build. Protect cylinders from humidity and other forms of moisture. Never store where temperature falls below -7°C (20°F), bromine's freezing point.

Empty bromine from non-returnable steel cylinders within six months from filling date to avoid container corrosion. GLCC does not recommend long term storage in the steel cylinders.

Bromine Cylinder Unloading

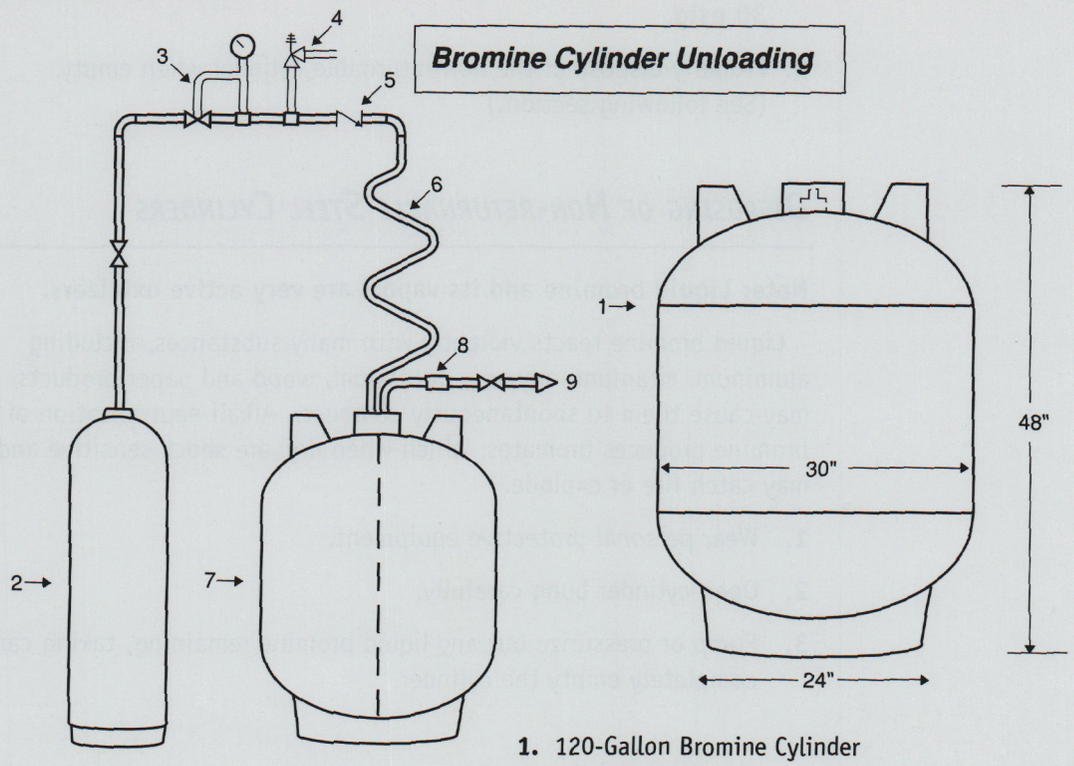

1. 120-Gallon Bromine Cylinder
2. Nitrogen Cylinder
3. Pressure Regulator
4. Relief Valve
5. Teflon® Check Valve
6. Flex Hose
7. Bromine Cylinder
8. Kynar® Union
9. Bromine to Storage or Use

Unloading of Non-returnable Steel Cylinders

1. Carefully move the unopened cylinder to the area in which it will be used, with a fork truck of adequate lifting capacity. See figure for typical unloading set-up.
2. To control vapors, work in a well-ventilated area and vent the immediate area around the cylinder opening to a scrubber system.
3. Wear personal protective equipment.
4. If the cylinder is warm to the touch, allow it to cool to ambient temperature to dissipate any pressure build-up.
5. Use a socket wrench with a long handle to remove the cylinder's standard 2 inch plug, venting any pressure into the scrubber system.
6. Replace the plug with a Monel® dip pipe assembly.
7. Place the cylinder on a scale to facilitate unloading control.
8. Use a flexible standard air-type hose to pressurize the container with dry air (-40°C/ -40°F dew point) or nitrogen. **Do not exceed 30 psig.**
9. Properly dispose of the non-returnable cylinder when empty. (See following section.)

Disposing of Non-returnable Steel Cylinders

Note: Liquid bromine and its vapors are very active oxidizers.

Liquid bromine reacts violently with many substances, including aluminum, titanium, mercury, potassium, wood and paper products, and may cause them to spontaneously combust. Alkali neutralization of bromine produces bromates, which when dry, are shock sensitive and may catch fire or explode.

1. Wear personal protective equipment.
2. Open cylinder bung carefully.
3. Pump or pressurize out any liquid bromine remaining, taking care to completely empty the cylinder.

4. Gently heat the outside of the cylinder with hot water approximately 74°C (165°F) to vaporize any residual bromine. Vapors must be vented to a scrubber.
5. **Only after careful inspection and certainty that the cylinder is completely empty, fill the cylinder with fresh hypo solution*.**
6. Allow the cylinder to stand for four to six hours, then remove solution from the cylinder.
7. Using clean water, fill the cylinder, empty, rinse and drain.
8. Dispose of spent hypo solution* and rinse water properly.
9. Prior to disposal, crush or destroy the cylinder to prevent unauthorized reuse.
10. Discard the bung and dispose of the decontaminated cylinder in accordance with federal, state and local regulations.

---

* ***Hypo solution:*** *Dissolve 57 pounds of sodium thiosulfate and 1 pound of soda ash in 85 gallons of water.*

Tank Trucks

Great Lakes Chemical Corporation supplies bromine in bulk in lead-lined double barrel tank trailers with a length of ~32 feet and clearance not to exceed 10′ 10″. Each tank has a capacity of ~600 gallons giving the trailer an approximate total net weight of 30,000 pounds. Bromine is also available in nickel-lined 1,800-gallon (44,000 to 45,000 pound net weight) tank trailers with lengths of 33′ 3″ to 40′ 7″ and clearances not to exceed 9′ 2″. These trailers are designated as MC310, MC312 and MC412 as detailed in DOT requirements 49CFR.

Adequate storage facilities are necessary for prompt return of these special trucks. For those designing new or revising existing bromine handling and storage facilities, Great Lakes Chemical Corporation can provide design assistance and guidance.

Tank Truck Unloading

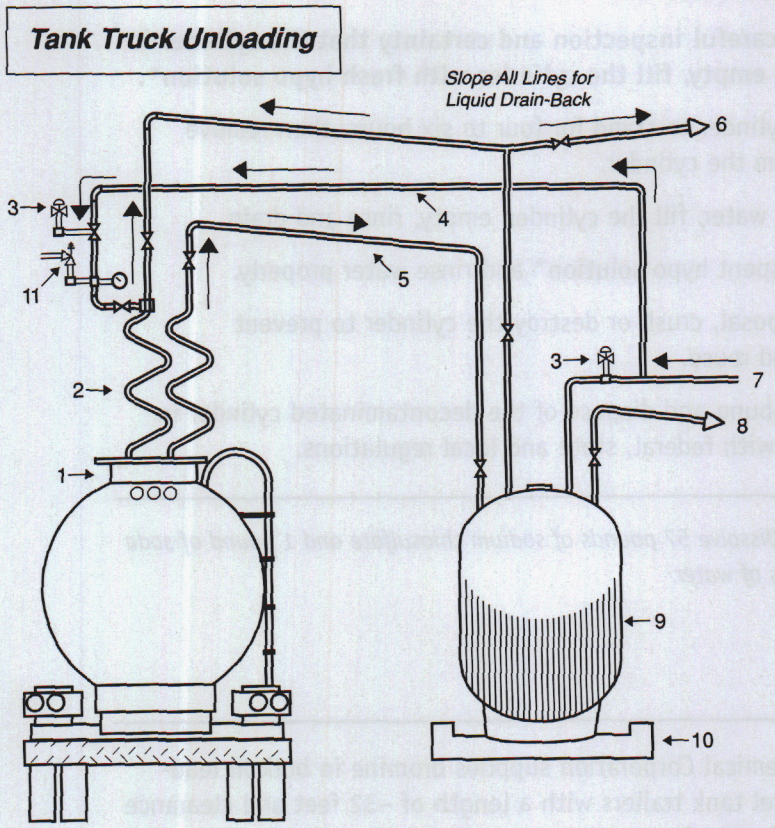

1. 2 Nickel valves in Dome (Vapor (Green) and Liquid (Red)) Plus Relief Valve
2. Teflon® lined Flexible Hose
3. Pressure Reducer Valve
4. Steel Pipe
5. Kynar®, Teflon® or Appropriate Lined Pipe
6. Vent to Scrubber
7. Dry Purge Air (-40°C/ -40°F Dew Point) or Nitrogen
8. Bromine to Process
9. Lead or Glass-Lined Steel Storage Vessel
10. Concrete Safety Sump
11. Pressure Relief Valve for Nitrogen or Dry Air System

Unloading for Tank Trucks

The schematic shows a typical tank truck's unloading set-up. Great Lakes Chemical Corporation drivers, if requested, will assist in unloading of the bromine. We recommend Resistoflex® Teflon® lined rubber hoses for the unloading of the trucks.

1. Wear personal protective equipment at all times while unloading a tank truck.
2. Position trailer under unloading racks so no undue stress is placed on unloading hoses.

3. Remove the blind flange from the vapor valve (**green**) and connect the Teflon® gasketed vapor line. Tighten flange securely. Slowly release any pressure into the scrubber system by slowly opening the green vapor valve, then close it.
4. Make sure the dip-pipe liquid valve **(red)** is closed.
5. Remove the blind flange from the red liquid valve and attach the liquid unloading line using Teflon® gaskets and four bolts.
6. Open the red liquid valve slowly, checking the connection for leaks.
7. Pressurize the trailer with dry air (-40°C/ 40°F dew point) or nitrogen through the green vapor valve with the minimum pressure necessary to remove the bromine. ***Pressure should not exceed 40 psig.***
8. Open the green vapor valve slowly, checking the connection for leaks. If leaks are detected, first close the vapor valve, then the liquid valve. Check the gasket alignment and tighten all flange bolts. Repeat leakage check.
9. After approximately an hour of unloading, the liquid hose will begin to surge indicating the trailer is nearly empty. Close the trailer's green vapor valve and allow the liquid line to surge for five to seven minutes to empty the line, then vent to the scrubber system and cut off the nitrogen/air supply.
10. Close the red liquid valve and disconnect the vapor line, then disconnect the liquid line. **Caution: Be extremely careful disconnecting the liquid line; there may be some bromine left in the hose.**
11. Replace the gaskets and blind flanges on both trailer valves unloading hose. Replace all bolts and fasten securely.
12. If any bromine has spilled on the trailer or valves during the operation, wash thoroughly with water.

Tank Car Unloading

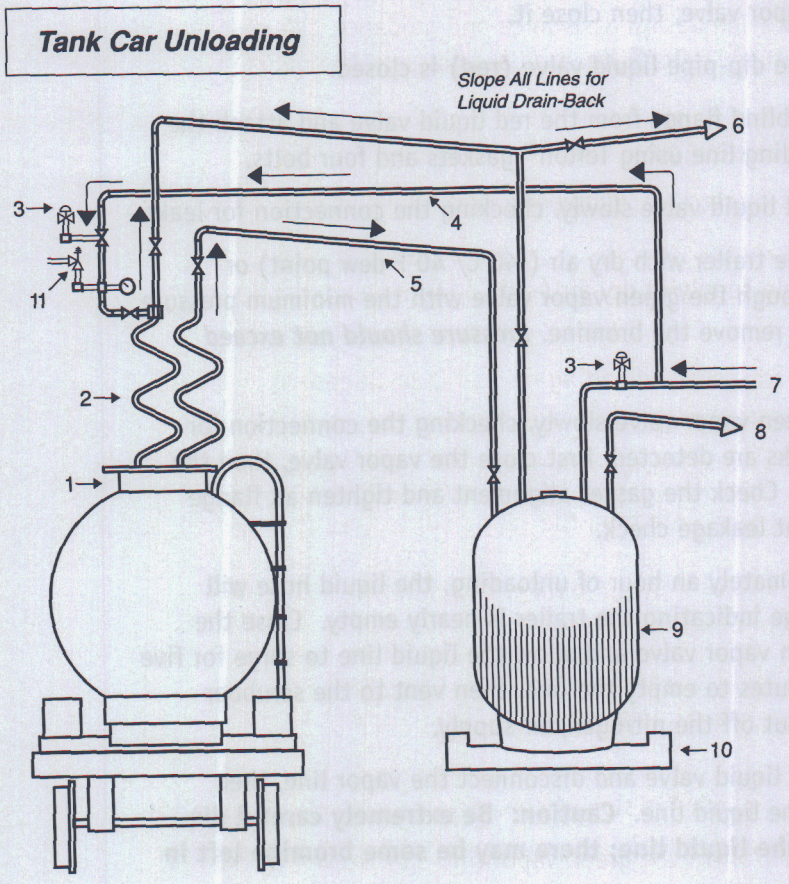

1. 2 Nickel valves in Dome (Vapor (Green) and Liquid (Red)) Plus Relief Valve
2. Teflon®-lined Flexible Hose
3. Pressure Reducer Valve
4. Steel Pipe
5. Teflon®, Kynar®, or Appropriate Lined Steel Pipe
6. Vent to Scrubber
7. Dry Purge Air (-40°C/ -40°C Dew Point) or Nitrogen
8. Bromine to Process
9. Lead or Glass-Lined Steel Storage Vessel
10. Concrete Safety Sump
11. Pressure Relief Valve for Nitrogen or Dry Air System

Tank Cars

Great Lakes Chemical Corporation supplies bulk bromine in 2,400 gallon (56,000 pound) or 4,400 gallon (110,000 pound) lead-lined tank cars, which are designated 105A300W under DOT requirements 1731.252 (a) (4). The length of the smaller rail car is 29' with a clearance of 11'. The larger car has an overall length of 37' 9 1/2", and clearance of 12' 2".

Adequate storage facilities are necessary for prompt return of these special rail tankers. For those designing new or revising existing bromine handling and storage facilities, Great Lakes Chemical Corporation can provide design assistance and guidance. We recommend the use of Resistoflex® Teflon®-lined rubber hoses in the unloading procedure.

Unloading of Tank Cars

1. Wear personal protective equipment at all times while unloading a tank car.
2. Have an ample supply of dry air (-40°C/ -40°F dew point) or nitrogen.
3. Position the car under unloading rack so that unloading hoses are not under undue stress.
4. Set hand brake and position safety chocks under the wheels.
5. Remove the blind flange from the vapor valve (**green**) and connect the Teflon® gasketed vapor line. Tighten flange securely. Slowly release any pressure into the scrubber system by slowly opening the green vapor valve, then close it.
6. Remove the blind flange from the liquid valve (**red**) and connect the Teflon® gasketed liquid unloading line. Tighten flange securely.
7. Open the red liquid valve slowly, checking the connection for leaks.
8. Apply nitrogen/air to the green vapor line, not exceeding the design pressure of the scrubbing system and never more than 75 psig. Bromine will begin to flow. **Note:** If the air temperature is below -7°C (20°F), bromine may freeze. If so, circulate warm water not more than 37.8°C (100°F) or low-pressure steam through the car's heating coils.
9. Check all connections for leaks. If a leak is discovered, close both the vapor and liquid valves. Check the gasket alignment and tighten all the bolts. Re-open valves and repeat leakage check.
10. The liquid hose will begin to surge when the tank car is nearly empty. Close the green vapor valve and let the hose surge for five to ten minutes to blow the remaining bromine out of the line, then close the red liquid valve.
11. Disconnect the vapor line, then the liquid line. **Caution: Be extremely careful disconnecting the liquid line; there may be some bromine left in the hose.** Replace the gaskets and valve flanges and tighten securely.
12. Thoroughly wash any spilled bromine off the car with water.
13. Close the dome lid and fasten with the locking mechanism.
14. Disconnect the warm water supply, if used. Blow water out of the coils with air and/or run antifreeze through them.
15. Return the car to Great Lakes Chemical Corporation.

Design Recommendations

Before shipping bromine to a customer, Great Lakes Chemical can help review the storage and handling facilities involved. This can include review of drawings of the facilities, review of training, operating, and maintenance procedures and may include a site inspection. Great Lakes has demonstrated safe production, transport, and handling of bromine throughout the history of the corporation. We are committed to providing training and our expertise to our customers for the safe use of bromine.

Bromine Handling Manual

ALBEMARLE® CORPORATION

TABLE OF CONTENTS

Page

Introduction 1

Chemical Reactions 2

Inorganic 2

Organic 2

Safety & Handling Practices 3

Toxicity 3

First Aid Procedures 4

Protective Clothing 4

Respiratory Equipment 4

Vapor Detection Equipment 5

Leaks and Spills 5

Laboratory Handling 5

Labeling 5

Shipping Information 6

Unloading Procedures 7

Unloading Tank Trailers 8

Unloading Tank Cars 10

Unloading ISO Tanks 13

Materials of Construction 16

Storage Tank and Related Equipment 17

Polyvinylidene Fluoride (PVDF)-Lined Pipe 18

Equipment for Bromine Use 18

FIGURES/CHARTS

Page

Figure 1 • Protective Clothing (photo) 4

Figure 2 • Unloading Facilities 7

Figure 3 • Tank Trailer (photo) 9

Figure 4 • Tank Trailer, Side View 9

Figure 5 • Tank Trailer Dome (photo) 10

Figure 6 • Tank Trailer Dome, Side View 10

Figure 7 • Tank Car Dome 11

Figure 8 • Tank Car (photo) 12

Figure 9 • Tank Car Dome (photo) 12

Figure 10 • Tank Car, Side View 12

Figure 11 • ISO Tank (photo) 15

Figure 12 • ISO Tank, Side View 15

Figure 13 • ISO Tank Dome (photo) 16

Figure 14 • ISO Tank Dome 16

Chart 1 • Specific Gravity 20

Chart 2 • Solubility in Water 20

Chart 3 • Liquid Density 20

Chart 4 • Vapor Pressure, °F 21

Chart 5 • Vapor Pressure, °C 21

Chart 6 • Vapor Viscosity 22

Chart 7 • Liquid Viscosity 22

Chart 8 • Vapor Thermal Conductivity, °F 23

Chart 9 • Vapor Thermal Conductivity, °C 23

Chart 10 • Liquid Thermal Conductivity, °F 24

Chart 11 • Liquid Thermal Conductivity, °C 24

INTRODUCTION

In 1825, Antoine-Jerome Balard, only 23 years of age at the time, conducted experiments in which he chlorinated the aqueous extract of ashed algae. The bromine that was liberated was recovered by distillation. Balard's discovery of bromine led to the development of many useful bromine derivatives. Silver bromide found a use in early photographic processes. Other bromine compounds were used in areas such as medicines and dyes.

Bromine occurs naturally in salt brines which are found in both surface and subterranean waters and in solid deposits throughout the world. The bromine concentration in sea water is about 65 mg per liter. Some subterranean salt brines, such as those found in Arkansas, Michigan and in the Middle East, are up to one hundred times more concentrated in bromide than sea water. These underground salt brines are the source of much of the world's commercial bromine supply today.

Today, bromine is widely used in the manufacture of pharmaceuticals, flame retardants, pesticides, germicides, photographic chemicals, oil drilling chemicals, water purifiers, dyes, perfumes, petroleum additives, agricultural fumigants and chemicals, analytical reagents, chemical catalysts, dehydrating agents, flotation agents, organic solvents and oxidizing agents.

CHEMICAL REACTIONS

Bromine is highly reactive due to its strong oxidizing power. Anhydrous bromine reacts vigorously with certain metals, such as potassium, aluminum and titanium, and less readily with sodium, zinc and iron. Reactions of bromine with water form the basis for many of its inorganic chemical reactions and some organic reactions. Organic compounds are brominated by addition at unsaturated points of the molecule or by substitution with release of hydrogen bromide. Selected inorganic and organic chemistry of bromine is covered in the following paragraphs.

Inorganic Reactions

Bromine is slightly soluble in water and will react with water according to the equation:

$$Br_2 + H_2O \rightleftarrows HBr + HOBr$$

Bromine, like chlorine, is a bleaching agent due to formation of hypobromous acid (HOBr).

Reactions of bromine with strong caustic solution forms sodium bromide and hypobromite. At temperatures above 0°C, the hypobromite disproportionates, forming bromate.

$$Br_2 + 2NaOH \rightarrow NaBr + NaOBr + H_2O$$
$$3NaOBr \rightarrow NaBrO_3 + 2NaBr$$

Anhydrous hydrogen bromide is prepared by burning a jet of bromine in a hydrogen atmosphere. The anhydrous hydrogen bromide can be used as is or absorbed in water to yield aqueous hydrogen bromide solutions (hydrobromic acid).

The action of bromine on iron at elevated temperatures can yield anhydrous ferric bromide. In the presence of water, the reaction is accelerated and both ferric ($FeBr_3$) and ferrous ($FeBr_2$) bromide are formed. Preparation of anhydrous aluminum bromide is carried out by the vigorous exothermic reaction of bromine with aluminum metal. Reactions of anhydrous bromine with lead and nickel are inhibited by the formation of metal bromide coatings. Thus, these metals can be used as materials of construction in bromine handling systems (only for bromine with less than 30 ppm water and organics).

Aqueous solutions of various metal bromides can be made by reaction of bromine with a metal hydroxide, utilizing a reducing agent to convert coformed bromate to bromide. The net equation for a patented process (U. S. Patent #5,230,879, July 27, 1993) developed by Albemarle is:

$$CH_3OH + 3Br_2 + 6NaOH \rightarrow 6NaBr + 5H_2O + CO_2$$

With other halogens, bromine forms interhalogen compounds. For example, with chlorine, bromine chloride is formed in equilibrium with the two halogens.

$$Br_2 + Cl_2 \rightarrow 2BrCl$$

Bromine acts as an oxidizing agent in many aqueous inorganic reactions such as the following:

$$Br_2 + 2KI \rightarrow 2KBr + I_2$$
$$2Br_2 + N_2H_4 + 4NaOH \rightarrow 4NaBr + 4H_2O + N_2$$

Reactions of bromine with ammonia, depending on conditions, can yield several different products, including ammonium bromide (NH_4Br), bromamide (NH_2Br) or bromimide ($NHBr_2$). The latter two compounds are extremely unstable and tend to decompose violently, even at low temperature.

Organic Reactions

Bromine reacts with hydrocarbons generally by either addition or substitution. These reactions can occur by radical or ionic mechanisms, depending on conditions or catalysis type applied. Examples of addition reactions are formation of ethylene dibromide and 1,1,2,2-tetrabromoethane ("acetylene tetrabromide") from bromine plus ethylene and acetylene, respectively.

$$Br_2 + CH_2{=}CH_2 \rightarrow CH_2BrCH_2Br$$
$$2B_2 + CH{\equiv}CH \rightarrow CHBr_2CHBr_2$$

Substitution reactions of bromine with aliphatic or aromatic hydrocarbons form the organic bromide along with hydrogen bromide.

$$CH_4 + Br_2 \rightarrow CH_3Br + HBr$$
$$C_6H_6 + Br_2 \rightarrow C_6H_5Br + HBr$$

Alkyl monobromides are more efficiently made by reaction of hydrogen bromide with an alcohol, or by reactions of alcohols with bromine and sulfur dioxide or with phosphorus bromides. The preparation of aryl bromides often requires a Lewis acid catalyst such as $FeCl_3$ or $AlCl_3$.

$$Br_2 + 2ROH + SO_2 \rightarrow 2RBr + H_2SO_4$$
$$PBr_3 + 3ROH \rightarrow 3RBr + P(OH)_3$$

While some organic bromine-containing products are used as such, many are used as intermediates to other organic products. A classic example is the reaction of a Grignard reagent with a carbonyl compound to form an alcohol.

$$RBr + Mg \rightarrow RMgBr$$
$$R_1MgBr + R_2R_3C{=}O + H_2O \rightarrow R_1R_2R_3COH + Mg(OH)Br$$

Tertiary alkyldimethylamines can be processed by using alkyl bromides. Albemarle's process in Magnolia recycles the by-product bromine to its bromine recovery unit.

$$RBr + HN(CH_3)_2 \rightarrow RN(CH_3)_2{\bullet}HBr$$
$$RN(CH_3)_2{\bullet}HBr + OH^- \rightarrow RN(CH_3)_2 + H_2O + Br^-$$

SAFETY AND HANDLING PRACTICES

Bromine process buildings, including the unloading building, should be well-ventilated with a positive draft fresh air system. Process storage vessels and lines should be protected against temperatures below 19°F (-7.2°C) to prevent freezing.

It is strongly recommended that employees be educated and trained to use personal protective equipment. Periodic training classes for employees are important for maintaining a high degree of safety in bromine handling operations and are required by some regulations.

Training programs should include the following:

- **Material Safety Data Sheet.** A current sheet is available from Albemarle.
- **Occupational Health Guideline for Bromine, NIOSH/OSHA, NIOSH Publication 81-123.** This Guideline is for sale by the Superintendent of Documents, U.S. Government Printing Office, Washington, D.C. 20402. Certain EEC states also have guidelines.
- **Warning systems for keeping untrained or unauthorized personnel out of bromine process areas.**
- **Handling procedures and spill/leak training.** Bromine should be handled only when assistance is available if needed and an emergency shower/eye wash is accessible. Use personal protective equipment. Avoid inhalation of bromine vapors (easily detected visually or by odor).
- **Equipment inspection.** Report all equipment needing repair to supervision. List materials of construction that are recommended or should be avoided.
- **First aid and medical training.** Recognition and reporting signs of illness.

At all times, refer to the material safety data sheet for the most current health and safety information.

Toxicity

Bromine is injurious by contact with the liquid and by inhalation of the vapor. It is a very active oxidizing agent in the liquid or vapor state. Bromine rapidly attacks the skin and respiratory tract, resulting in irritation or painful burns. Tearing from the eyes can be caused by exposure to only 1 ppm. Levels in excess of 10 ppm will cause respiratory irritation, which will not be tolerated. High concentrations of bromine vapor can cause destructive burns to the skin and eyes. The odor (0.05 ppm odor threshold) and painful effects of bromine vapors warn of the presence of dangerous concentrations. The maximum time-weighted average concentration (TWA) of bromine considered safe by the American Conference of Governmental Industrial Hygienists for repeated eight-hour exposure is one-tenth (0.1) ppm. The OSHA TWA Permissible Exposure Limit (PEL) is 0.1 ppm. The 15-minute Short Term Exposure Limit is 0.3 ppm. Concentrations of 10 ppm and higher are immediately dangerous to life and health (NIOSH IDLH).

First Aid Procedures

If bromine is spilled or splashed on the skin, the affected area should be flushed immediately with large amounts of water using a safety shower or flowing fresh water source. Wash for a minimum of 15 minutes. Longer wash times, up to a few hours, have proven beneficial by extracting bromine and acids from the skin. Contaminated clothing and shoes should be removed immediately. The contam-inated clothing, including shoes, belts and other leather goods, should be placed in a plastic bag and discarded to avoid contamination of others. Neutralizing agents should not be used on skin to avoid possible burns.

If eyes are contacted by bromine, begin immediate eye irrigation with cool water for at least 15 minutes with the eyelids held open by gently separating them with the fingers.

If bromine is inhaled, remove yourself or the subject from the contaminated area. If person's breathing has stopped, start artificial respiration. Give oxygen if needed. Be sure proper protective equipment is used in a rescue situation.

Seek medical attention in all cases of bromine exposure. A brownish discoloration of the skin may lead to the development of deep-seated ulcers. Contact with the eyes may result in severe and painful burns. Bromine inhalation may have delayed effects causing severe pulmonary edema. Prolonged exposure may result in excessive body absorption producing serious health consequences (dizziness, headache, abdominal pain, diarrhea and respiratory failure).

Protective Clothing

Proper protective clothing should be worn by employees handling bromine. Everyone assigned to unloading bromine (or other bromine handling procedures) should be equipped with goggles, respiratory protection, rain suit (pants and coat), hard hat, neoprene or nitrile rubber gloves and rubber boots. All protective clothing exposed to bromine should be washed thoroughly with water before reuse. Leather shoes should be discarded after any contact with liquid bromine. Rubber boots should not be used to walk in liquid bromine.

Albemarle uses neoprene-on-nylon rain suits and nitrile butyl rubber gloves and boots. This equipment needs to be changed upon any sign of stiffness or deterioration. We do not recommend the use of polyvinyl chloride (PVC) nor polyethylene (PE).

Safety showers and eye wash stations should be strategically located in areas where bromine is used or stored. The location should be close enough for immediate use, but at a distance that would not result in further danger. *Refer to ANSI Standards for suggested location distances.*

Figure 1 • Protective Clothing

Respiratory Equipment

When there is a potential for exposure to bromine vapors, a NIOSH or EN 141/143 (EEC) approved full facepiece respirator with acid gas cartridges or canister should be worn. Note that this approval is for escape only and, in the event of a leak or spill, it should be used for escape only. An air-supplied respirator can be worn in known concentrations up to 10 ppm. For emergencies, spills, concentrations greater than 10 ppm, or unknown concentrations, a self-contained breathing apparatus (SCBA) must be worn. Workers should be trained on the use of respirators and emergency procedures.

Vapor Detection Equipment

Bromine vapor in plant air can be monitored by using an electrochemical sensor that sounds an alarm when a certain level is reached. A Dräger Polytron™ Chlorine sensor is recommended to detect bromine.

Detector tubes are useful for determining the level of respiratory protection required. These tubes contain ortho-toluidine, which produces a yellow-orange stain when reacted with bromine. The useful concentration range is 0.2 to 30 ppm. Dräger or equivalent tubes and sample pumps have been used successfully and are available through a safety supply company.

Leaks and Spills

Personnel responding to spills or leaks, or rescuing disabled persons, should wear protective equipment and use a self-contained breathing apparatus. Leaks or spills should be taken care of at once. For example, spillage from a leaking valve or line connection can be controlled by blocking valves and shutting off gas pressure. Use water to flush liquid bromine spills off transportation equipment into a containment area.

In the case of a bromine liquid spill, a slight water spray should be applied to the liquid to reduce the vapors (1 - 3" water average). Because bromine is heavier than water, bromine vaporization is significantly reduced. If the spill occurs outside of a diked area, an emergency dike should be built using dirt or sand. The bromine spill can be neutralized using the following chemicals:

A. **Soda Ash (Sodium carbonate 5 - 30%)**
$3Na_2CO_3 + 3Br_2 \rightarrow NaBrO_3 + 5NaBr + 3CO_2$
Heat of Reaction: 14.2 Kcal/mole Br_2 (endothermic)

B. **Caustic (Sodium hydroxide 5 - 10%)**
$6NaOH + 3Br_2 \rightarrow NaBrO_3 + 5NaBr + 3H_2O$
Heat of Reaction: -10.8 Kcal/mole Br_2 (exothermic)

C. **Others**
10 - 30% Potassium carbonate solution
5% Lime [CaO or $Ca(OH)_2$] slurry

Bromates can result from some neutralization reactions and may need to be removed. A 10 - 30% sodium thiosulfate (aqueous) solution or 95 - 100% methanol can be used. Heat will be released on reduction of bromates.

A spill that is contained in a diked area can be flushed to a waste sump or drainage system with a cold water hose. Secondary containment sumps should always contain a level of water to control the vapors of any spilled bromine. With large spills, bromine recovery might be considered.

Decontamination of bromine vapor in the atmosphere can be handled by releasing a controlled quantity of ammonia vapor. (Anhydrous ammonia is a strong irritant for the skin, eyes and respiratory tract; has a sharp, penetrating odor; and is flammable.) White clouds of ammonium bromide form. ***(Do not pour liquid ammonia on bromine, as a violent reaction may result.)*** Bromine vapors are 5.5 times as heavy as air and will tend to hug the ground seeking the lowest elevation until diluted and dissipated by air movement.

Handling in the Laboratory

Bromine should be handled with extreme caution. Bromine should only be used in a well-ventilated hood. When handling bromine, protective clothing should be worn: minimum safety glasses/goggles, neoprene or rubber gloves, lab coat. For additional protection, a neoprene rain suit, rubber boots, face shield or respirator may be worn. Bromine should only be handled by well-trained personnel. Bromine samples should be stored in dry, thick-walled, narrow-mouthed bottles with fluorocarbon caps that have a Teflon™ liner. Handle bromine in a plastic-type tray to contain spills or drips. Be sure that water and neutralizing agents are available to handle a spill.

Labeling

The American National Standard Institute recommends that all containers of bromine bear a label containing handling and first aid information. Labels on tank trailers, tank cars and ISO tanks are usually affixed inside the dome area where they are protected from the weather, but can be seen by operating personnel unloading the containers. Federal and state labeling laws should be followed. One such law to be complied with is the Federal Hazardous Substance Labeling Act.

SHIPPING INFORMATION

Bromine is classified as a Class 8 (Corrosive) material, UN1744. Bromine also meets the criteria as a Poison Inhalation Hazard (PIH). Bulk containers must be placarded with both the Corrosive (with Hazard Class) and Poison (without Hazard Class) subsidiary placards. An instruction card for bromine is given to truck drivers handling bromine trailers and ISO tanks.

Tank trailers are nickel-clad and built to DOT MC 312, MC 331 or MC 412 specifications. The 600-gallon tank trailer is lead-lined. ***Tank cars*** are insulated, coiled and lead-lined and built to DOT 105A500W specifications. ***ISO tanks*** are lead-lined and built to IM 101 and IMO Type 1 specifications.

Both the tank trailers and ISO tanks are uninsulated. Authorization for these containers is found in paragraph 173.249 of Title 49 of the Code of Federal Regulations.

Bromine may be obtained from Albemarle in the following bulk quantities:

Container	Gal/L	Lbs/Kg
Tank Trailer	1,800/6,813 600/2,271	42,000/19,050 14,000/6,350
Tank Car	4,400/16,655 2,200/8,327	110,000/50,000 56,000/25,400
ISO Tank	1,650/6,245	38,000/17,235

UNLOADING PROCEDURES

After the container is spotted and before the liquid and vapor lines are connected, the shipping container valves should be checked to determine that they are closed. (Figures 6, 7 and 14 illustrate the arrangement of valving in the bromine tank trailer, tank car and ISO tank domes.)

Check the bromine storage tank level before beginning the unloading operation, to be sure there is adequate volume to receive the shipment. In general, it is recommended that the usable volume of the storage tank be at least fifty percent larger than the volume of the tank trailer, tank car or ISO tank that will be unloaded into it. Of course, usage rates, scheduling and other considerations may be factors in sizing the storage tank.

Dry nitrogen gas is recommended for pressure transferring bromine, although dry air [-40°F (-40°C) dewpoint] may be used. Spent transfer gas will be saturated with bromine and should be routed to the bromine scrubber system.

It is mandatory that the padding vapor is dry. Severe corrosion can result if wet, and cause corrosion damage to the containers.

Well-trained operators and close adherence to carefully defined procedures are necessary for safely unloading a bromine container.

Figure 2 • Unloading Facilities

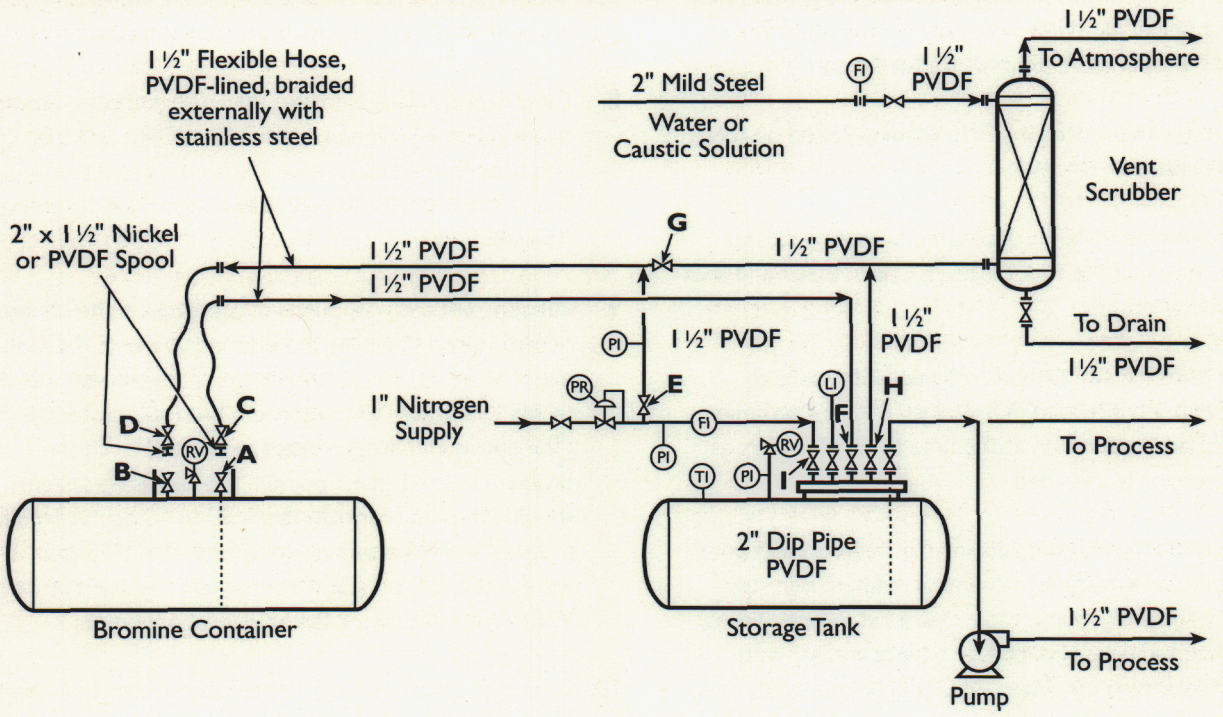

Legend	
A. Bromine container liquid valve (2")	PR Pressure regulator
B. Bromine container liquid valve (2")	PI Pressure indicator
C. Liquid line valve (1 ½")	LI Level indicator
D. Nitrogen supply — vapor line valve (1 ½")	TI Temperature indicator
E. Nitrogen valve (1")	FI Flow indicator
F. Storage liquid valve (1 ½")	RV Relief valve (225 PSIG)
G. Scrubber vapor valve (1 ½")	PVDF Polyvinylidene Fluoride
H. Storage vapor valve (1 ½")	
I. Storage nitrogen valve (1")	

Unloading Tank Trailers

DOT Regulations require that tank trailers be attended during unloading. If it is necessary for the attendant to leave the operation, bromine transfer must be stopped.

The suggested procedure for unloading, based on the facility shown in Figure 2:

1. Spot bromine trailer at designated unloading location. Make sure that the trailer is level. Chock trailer and shut off tractor engine.

2. Make sure the storage tank has adequate space to receive the trailer load of bromine. The vent scrubber should be in operation at the time to scrub vapors as the bromine is unloaded.

3. Everyone assigned to unloading the trailer should be equipped with goggles, a chemical resistant rain suit (pants and coat), bump cap or hard hat, rubber gloves, rubber overshoes and full-face type respirator with canister or twin cartridges (NIOSH/EN approved) for acid gases. Put on the personal protective equipment and check the gas respirator. Always wear this protective equipment when connecting or disconnecting and when near the unloading area while unloading is in process.

   NOTE: In case bromine in the trailer is frozen, use warm water (Do not use live steam.) or indirect low pressure [60 psi (4.0 bar) or less] steam in the heating coils. Extreme caution must be used.

4. Check trailer valves to be sure they are closed. Also check for labels and be positive which line into the tailer tank is the vapor line and which is the liquid line (dip leg). The liquid valve is 2", painted red and tagged "Liquid." The vapor valve is 1", painted green and tagged "Vapor." The liquid valve assembly can also be identified by visually witnessing which of the valves is directly above the bubble on the bottom of trailer. Check Figure 2 for details of the unloading hook-up.

5. With trailer vapor valve closed, remove the blind flange and connect the dry nitrogen supply to the Vapor Valve (B) on the trailer's vapor line. Use a new Garlock Blue Gylon™ gasket.

6. With the Liquid Line Valve (C) closed, remove the blind flange and connect the customer's unloading line to the Liquid Valve (A) on the trailer's liquid line. Use a new Garlock Blue Gylon™ gasket that is furnished with the trailer. DO NOT use an old gasket. Leave the Liquid Valve (A) closed.

7. Inform the operator responsible for unloading the bromine that the trailer is ready for unloading.

8. Close Storage Tank Nitrogen Valve (G) and open Storage Vapor Valve (F). Open Liquid Valves (C&E) and then slowly open the Liquid Valve (A) to the liquid unloading line. If there is sufficient pressure in the trailer, bromine flow will begin.

9. Put approximately 5 pounds of pressure on the nitrogen hose by slightly opening the Nitrogen Valve (D). Open Vapor Valve (B) and apply nitrogen pressure very slowly to the tank trailer to transfer the bromine to storage. (The minimum nitrogen pressure needed to lift the bromine to the highest point in the unloading system should be used. Normally this is 30 to 50 psi). Adequate pressure will maintain unloading rate of 1000 lb/min. Do not exceed 100 psi (DOT maintenance test at 100 psi). Watch for leaks during the unloading operation.

10. In case of a bromine leak, immediately close Liquid Valve (A) and Nitrogen Valve (D). Allow time for bromine in the liquid line between the high point and the storage tank to drain to the storage tank. Note that bromine can remain in the line between the high point and the trailer. Remove any pressure at leak point. Proceed with repairs or tightening of leaking fittings using proper safety precautions, protective clothing and respiratory protection. Start the unloading process over.

11. As the trailer approaches empty, surging in the flexible unloading line is seen. Close the Nitrogen Valve (D) and allow the liquid line to purge for five minutes or less. Additional purging time is unnecessary, and results in loss of bromine to the vent system.

12. Close the Liquid Line Valves (C) and (E), and close both liquid and vapor Valves (A) and (B). A slight positive pressure should be left on the container when the container is vented down (no more than 5 PSIG and no less than 1 PSIG).

13. Notify receiving operator that unloading is complete. Close Storage Vapor Valve (F). The Storage Nitrogen Valve (G) is left closed or opened as the customer's process requires.

14. Disconnect the Nitrogen Valve (D) from the trailer above the Vapor Valve (B) and replace the blind flange.

Figure 3 • Tank Trailer

Figure 4 • Tank Trailer, Side View

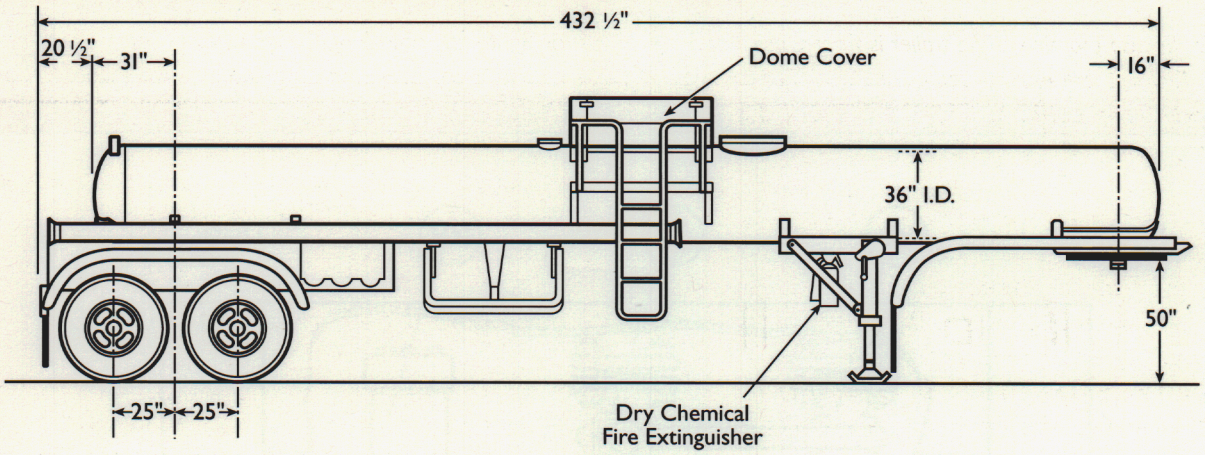

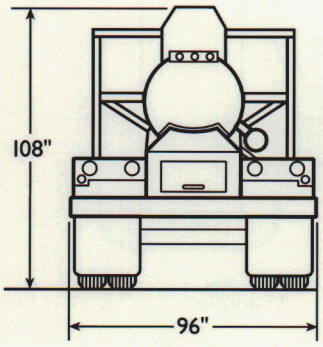

Rear View

Design Data			
Design Pressure	Safety Relief Valve Set Pressure	Tare Weight	Shell Volume
300 PSIG	225 PSIG	13,600 lbs	1,788 gal

15. Disconnect the unloading line above the Liquid Valve (A). [Nitrogen flow should have cleared this line of most liquid; however, caution should be exercised as some bromine may be trapped above Liquid Valve (A) and below Liquid Line Valve (C). An aspirator can be used to pull a vacuum between valves to eliminate residual bromine before breaking flanges.] Replace the blind flange on this valve.

16. *FINAL CHECK:* Be sure that both Valves (A) and (B) are closed and blind flanges are installed before the trailer is released.

17. Use water to wash away any bromine spilled during opening of the lines. Close dome and fasten securely.

18. Make sure the trailer is properly placarded with a Class 8 (corrosive)/UN1744 placard and a Poison placard without Hazard Class. The trailer should be returned to Albemarle immediately.

Figure 5 • Tank Trailer Dome

Figure 6 • Tank Trailer Dome, Side View

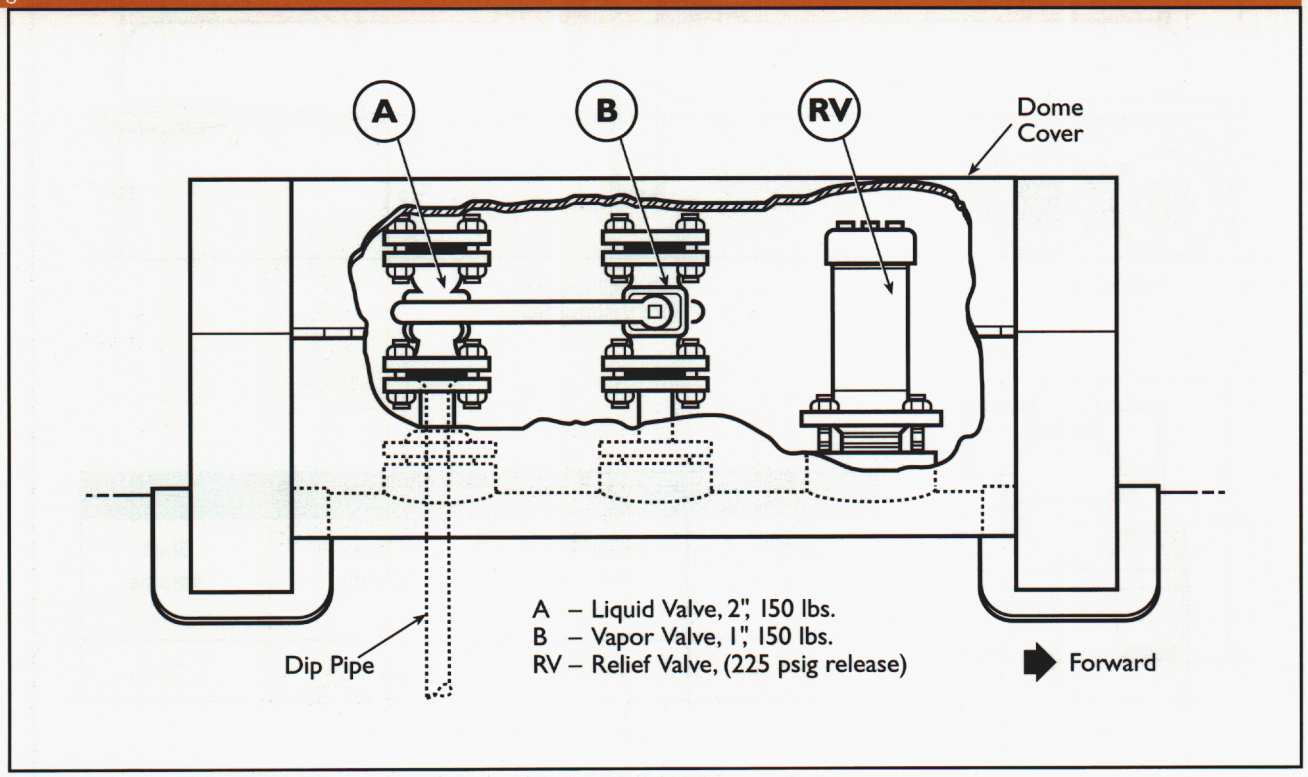

Unloading Tank Cars

Figure 10 shows a bromine tank car side view with dimensions. It also shows the heating coils (two) provided for thawing the bromine when required. Each of these coils terminates at the top and at the bottom with a 2-inch Schedule 80 NPT male pipe connection. In the dome, the cars are provided with 2-inch valves, with flanges, for both liquid and vapor.

Figure 7 shows a schematic arrangement of the dome valves. Figure 9 is a photograph of the dome.

A suggested procedure for unloading, based on the facility shown in Figure 2:

1. Operator should check the tank car number on each side of the tank car to make sure they correspond with the shipping papers.

2. The tank car should be located properly at the unloading spot. Brakes must be set and the wheels blocked with standard chocks. Derail devices and caution signs (blue flags) *must* be placed on open ends of the siding in accordance with DOT regulations. These devices should remain in place until the tank car has been emptied, disconnected and prepared for removal.

3. Make sure the storage tank has adequate space to receive the tank car load of bromine. The plant vent scrubber should be in operation at this time to scrub vapors as the bromine is unloaded.

4. Everyone assigned to unloading the tank car should be equipped with goggles, a rain suit (pants and coat), bump cap or hard hat, rubber gloves, rubber overshoes and full face-type respirator with canister or twin cartridges (NIOSH approved) for acid gases. Put on personal protective equipment and check the gas respirator. Always wear this protective equipment when connecting or disconnecting, and when near the unloading area.

5. Check tank car valves for labels and be positive which line to the tank car is the vapor line and which is the liquid line. The liquid line is 2", painted red and tagged "Liquid." The vapor line is 2", painted green and tagged "Vapor." The liquid valve assembly can also be identified by visually witnessing which of the valves has two flanges located beneath the valve.

6. Either dry nitrogen (recommended) or dry air [-40°F (-40°C) dewpoint] may be used to unload the bromine car. ***It is mandatory that the padding vapor is dry. If wet, severe corrosion can result and cause corrosion damage to the tank car.*** The pressure of the nitrogen supply must be greater than the car pressure.

7. Check to see if Tank Car Vapor Valve (B) is closed. The blind flange on the vapor valve of the car should be removed.

Figure 7 • Tank Car Dome

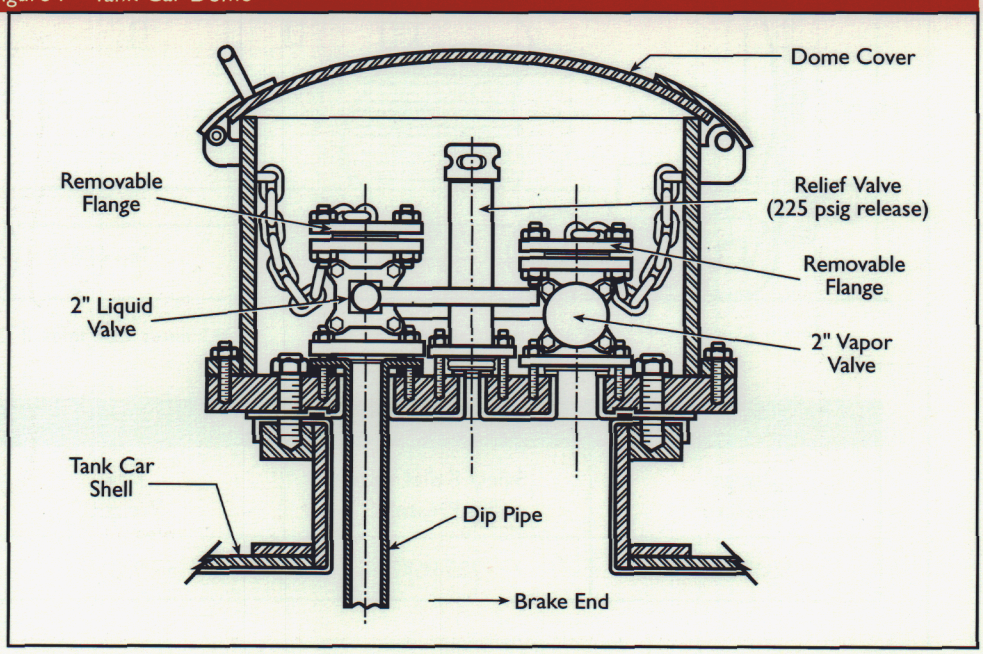

Figure 8 • Tank Car

Figure 9 • Tank Car Dome

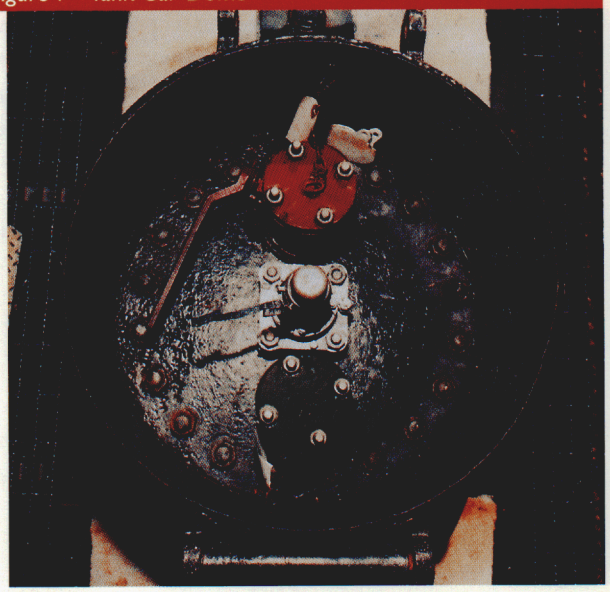

Figure 10 • Tank Car, Side View

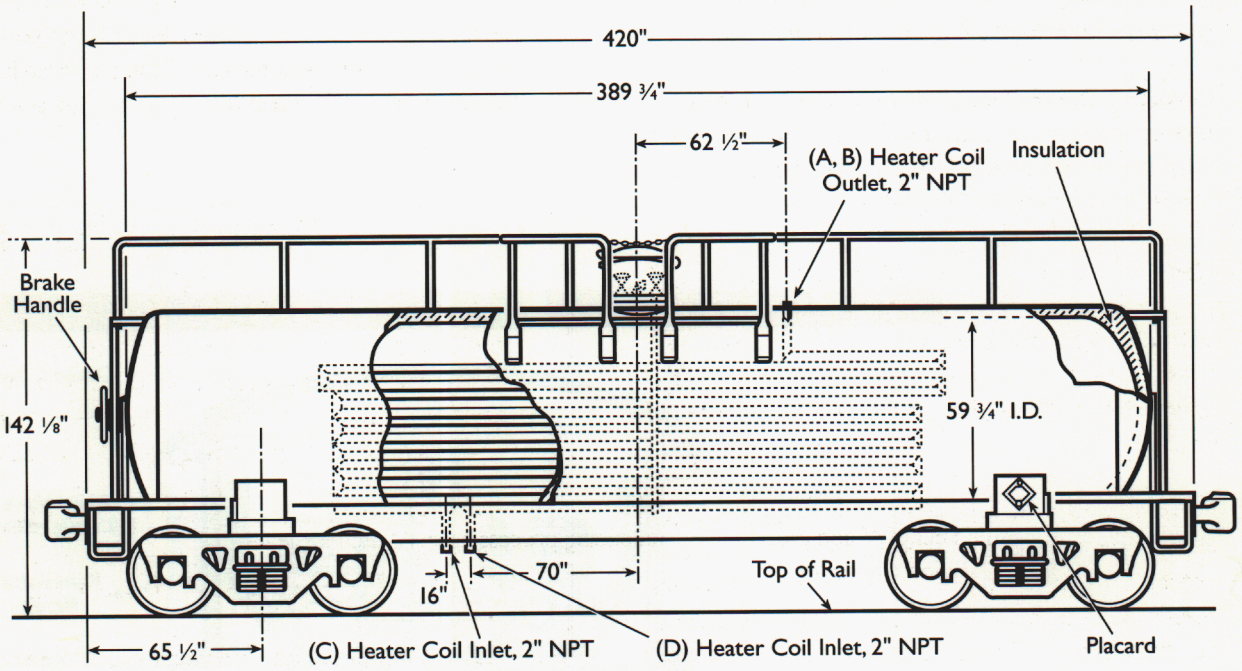

Design Data			
Design Pressure	Safety Relief Valve Set Pressure	Tare Weight	Shell Volume
500 PSIG	225 PSIG	69,000 lbs	4478 gal

8. With Nitrogen Supply-Vapor Line Valve (C) closed, connect it to the Tank Car Vapor Valve (B) using a Garlock Blue Gylon™ gasket.

9. Check to determine that the Tank Car Liquid Valve (A) is closed. The blind flange above the bromine liquid line valve should be removed.

10. The unloading line, with Liquid Line Valve (C) closed, is connected to the Tank Car Liquid Valve (A) using a Garlock Blue Gylon™ gasket. Inform the operator responsible for receiving the bromine that the tank car is ready for unloading.

11. Close storage tank Nitrogen Valve (I), open Storage Vent Valve (H). Close Scrubber Vapor Valve (G) and Nitrogen Valve (E).

12. With valves (E) and (G) closed, open Tank Car Vapor Valve (B) and Nitrogen Supply-Vapor Line Valve (D). Read the car pressure on the pressure indicator. The car pressure normally ranges from 30 - 50 psi and will depend somewhat on the ambient temperature. (The minimum nitrogen pressure needed to lift the bromine to the highest point in the unloading system should be used. Normally, this would be 30 - 50 psi.) The nitrogen supply pressure should be greater than the car pressure. If it is necessary to raise tank car pressure, open Nitrogen Valve (E); close Nitrogen Valve (E) when the tank car pressure is adequate. If supply pressure needs to be decreased, open Scrubber Vapor Valve (G) as needed to vent some of the car pressure.

13. Open Tank Car Liquid Valve (A) and Liquid Line Valve (C). Liquid will probably rise into the unloading line for a short distance. If there are no leaks, open Storage Tank Liquid Valve (F). Flow should start. If there are no leaks, open Nitrogen Valve (E) to maintain unloading pressure on the tank car.

14. In case of a bromine leak, immediately shut off Tank Car Liquid Valve (A), if it can be done safely. Whether or not it is possible to close Tank Car Liquid Valve (A), as quickly as possible, close Nitrogen Valve (E) and open Scrubber Vapor Valve (G). Let the tank car and storage tank pressures vent down and equalize. If Tank Car Liquid Valve (A) was closed, open it. Let the liquid in the unloading line drain to the tank car and storage tank. If it is desired to purge the liquid line for repair purposes, close Storage Tank Vent Valve (H) and open Storage Tank Nitrogen Valve (I) to allow nitrogen to flow through the storage tank, through the unloading line into the tank car and out the Tank Car Vent Valve (B) to the vent scrubber. When finished purging, close the Storage Nitrogen Valve (I) and the Scrubber Vapor Valve (G), and open Storage Vapor Valve (H). Repair the leak and start over.

15. If there is evidence that the bromine is frozen, circulate warm water [not over 130°F (54.4°C)] through the car's heating coils. ***DO NOT USE STEAM — BROMINE BOILS AT 138°F (58.9°C).*** During the heating period, Storage Tank Vent Valve (H) is open and Liquid Valves (A), (C) and (F) are also open. Vent Valves (B) and (D) will be open, but Nitrogen Valve (E) and Scrubber Vapor Valve (G) will be closed. Watch the pressure on the tank car and, if it exceeds the pressure usually used to unload the car, vent it down by opening Scrubber Vapor Valve (G). Close Scrubber Vapor Valve (G) when the pressure in the car reaches the desired level.

16. When nitrogen blows through the liquid unloading line into the storage tank, the car is empty. The Nitrogen Valve (E) is closed.

17. When nitrogen pressure is off the car, allow it to stand for 15 to 20 minutes for bromine liquid in the connections to drain back into the car. Close the three bromine Liquid Valves (A), (C) and (F). Close the Storage Vapor Valve (H).

18. Disconnect the liquid unloading line from the tank car and replace the blind flange on the Tank Car Liquid Valve (A).

19. Check the pressure on the car. A slight positive pressure should be left on the container, when the container is vented down (no more than 5 PSIG and no less than 1 PSIG). If necessary, open Nitrogen Valve (E) until the car has adequate pressure. Close Nitrogen Valve (E). Close the Tank Car Vapor Valve (B) and the Nitrogen Supply-Vapor Line Valve (D). Disconnect the line and put the blind flange on the Tank Car Vapor Valve (B).

20. Wash the top of the car with water if any bromine has been spilled.

21. If the hot water system has been used, drain and blow dry with air to prevent freezing.

22. Reverse the Class 8 (corrosive) / UN1744 placards to the "Residue" side, indicating the tank car is empty. Do not reverse the Poison placard (without Hazard Class). Return the Tank Car to Albemarle immediately.

Unloading ISO Tanks

DOT and EEC Regulations require that ISO tanks be attended during unloading. If it becomes necessary for the attendant to leave the operation, bromine transfer must be stopped.

A suggested procedure for unloading, based on the facility shown in Figure 2:

1. Position bromine ISO tank at designated unloading location. Make sure that the ISO tank is level. The ISO tank should be chocked in place and the identification number should be checked to make sure it corresponds with the shipping papers.

2. Make sure the storage tank has adequate space to receive the ISO tank load of bromine. The plant vent scrubber should be in operation at this time to scrub vapors as the bromine is unloaded.

3. Personnel assigned to unloading bromine should be trained and qualified to handle bromine. Everyone should be equipped with proper safety equipment: a chemical-resistant rain suit (pants and coat), hard hat, goggles, rubber gloves, rubber boots and full-face type respirator with canister or twin cartridges (NIOSH/EN approved) for acid gases. The protective equipment should be worn when connecting or disconnecting, and when near the pressurized system while unloading.

   NOTE: In case bromine is frozen, use warm water (do not use live steam) or indirect low pressure [60 psi (4.0 bar) or less] steam. Extreme caution must be used.

4. Check ISO tank valves for labels and confirm which line into the ISO tank is the vapor line and which is the liquid line (dip pipe). The liquid valve can be identified by visually noting which valve has a double flange (the dip pipe is flanged and the valve sets on top of the dip pipe. (See Figure 14.) The ISO tank valves are color coded **VAPOR-GREEN** and **LIQUID-YELLOW** and are tagged liquid and vapor to aid identification. The color code is stenciled on top of the dome cover. The valves on Albemarle's ISO tanks are 1½" ANSI Class 150 lb Teflon™-lined flanged valves.

5. Check the green ISO tank Vapor Valve (B) to be sure it is closed and carefully remove the blind flange on top of the valve. Connect the plant Nitrogen Valve (D) to the ISO tank Vapor Valve (B) using a Teflon™ gasket and tighten properly. Use either dry nitrogen (recommended) or dry air [-40°F (-40°C) dewpoint] to unload. **It is mandatory that the padding vapor is dry. Severe corrosion can result if wet and cause corrosion damage to the ISO tank.** Regulate the nitrogen supply pressure to 25 - 30 psi (1.7 - 2.0 bar) for unloading the ISO tank.

6. Check the yellow ISO tank Liquid Valve (A) to be sure it is closed and carefully remove the blind flange on top of the valve. Connect the plant Liquid Line Valve (C) to the ISO tank Liquid Valve (A) on the ISO tank's liquid line using a Teflon™ gasket and tighten properly. Do not open the ISO tank valves at this time.

7. Inform the control room or the operator responsible for unloading the bromine that the ISO tank is ready to to unload.

8. Close Storage Nitrogen Valve (G) and open the Storage Vapor Valve (F) to the vent scrubber. Open the Storage Liquid Valve (E), the Liquid Line Valve (C) and then slowly open the ISO tank Liquid Valve (A). If there is sufficient pressure in the ISO tank, bromine flow will begin. **WATCH FOR LEAKS.**

9. Open the ISO tank Vapor Valve (B) and apply adequate nitrogen pressure to establish a bromine flow to the storage tank. Thirty psi (2.0 bar) is usually adequate.

10. In case of a bromine leak, wear the proper protective equipment and immediately shut off the ISO Tank Liquid Valve (A) and the Nitrogen Supply Valve (D). Allow the ISO tank pressure to vent to the scrubber. Proceed with the necessary repairs to stop the leak. Begin the unloading process again. Watch for leaks.

11. Do not leave the ISO tank unattended while unloading. As the ISO tank approaches empty, the liquid line will surge (blow through) for a few minutes to clear the transfer line of all liquid bromine. Excessive purging will result in a loss of bromine to the vent scrubber.

Figure 11 • ISO Tank

Figure 12 • ISO Tank, Side View

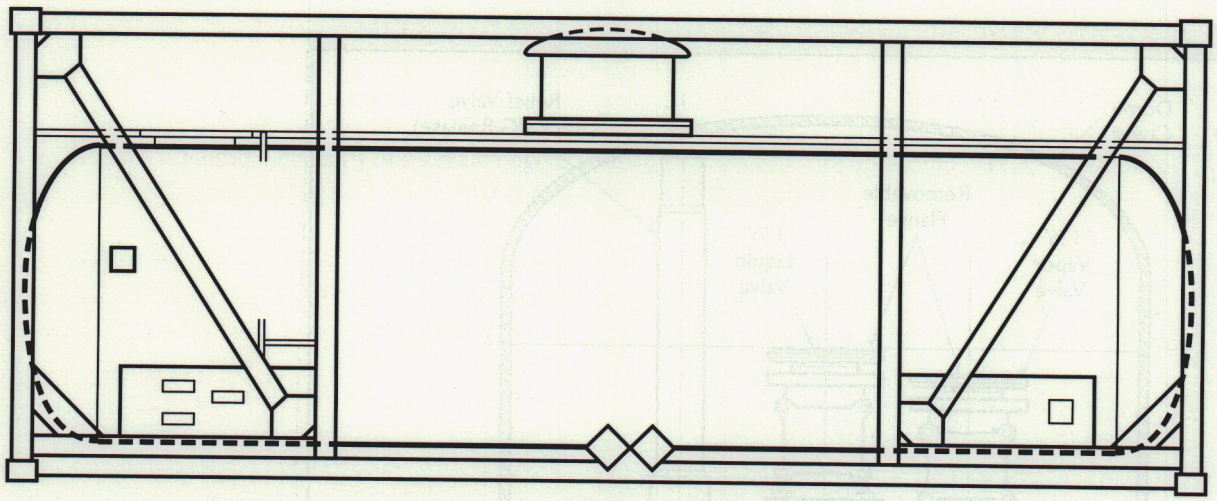

Design Data			
Design Pressure	Safety Relief Valve Set Pressure	Tare Weight	Shell Volume
200 PSIG/13.8 bar	106 PSIG/7.3 bar	14,070 lbs/6382 Kg	1650 gal/6245 L

12. When the liquid line is empty, close the ISO tank Liquid Valve (A), the Liquid Line Valve (C) and the Storage Liquid Valve (E). Switch the vapor line to the vent scrubber to relieve the pressure on the ISO tank. Once the ISO tank is depressurized, close the ISO tank Vapor Valve (B) and the valve to the vent scrubber. Close the Storage Vapor Valve (F) and open the Storage Nitrogen Valve (G).

13. Notify receiving operator that unloading is complete.

14. Disconnect the Nitrogen Valve (D) from the ISO tank Vapor Valve (B) and install the blind flange using a Teflon™ gasket.

15. Disconnect the Liquid Line Valve (C) from the ISO tank Liquid Valve (A). Use caution. There may be some bromine trapped between the ISO tank Liquid Valve (A) and below the Liquid Line Valve (C) on the unloading hose. Replace the blind flange on the ISO tank Liquid Valve (A) using a Teflon™ gasket and tighten properly.

16. Finally, check the ISO tank unloading valves to be sure they are closed and blind flanges are secure before releasing the ISO tank for return. Secure dome cover with latch pin.

17. Use water to wash away any bromine spilled during opening the lines.

18. Make sure the ISO tank has the proper placards, with Class 8 (corrosive)/UN1744 and Poison placards (without Hazard Class). Return the ISO tank to Albemarle immediately.

Figure 13 • ISO Tank Dome

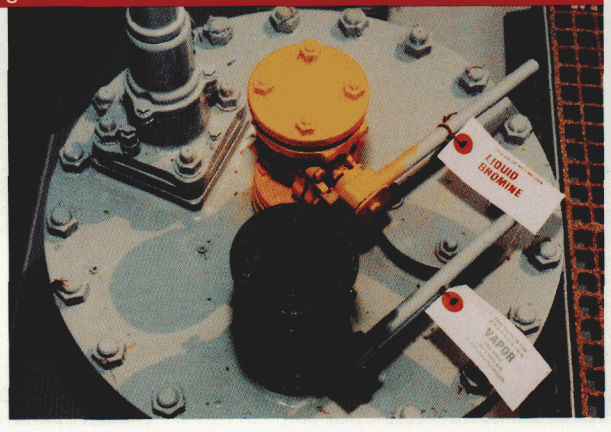

Figure 14 • ISO Tank Dome

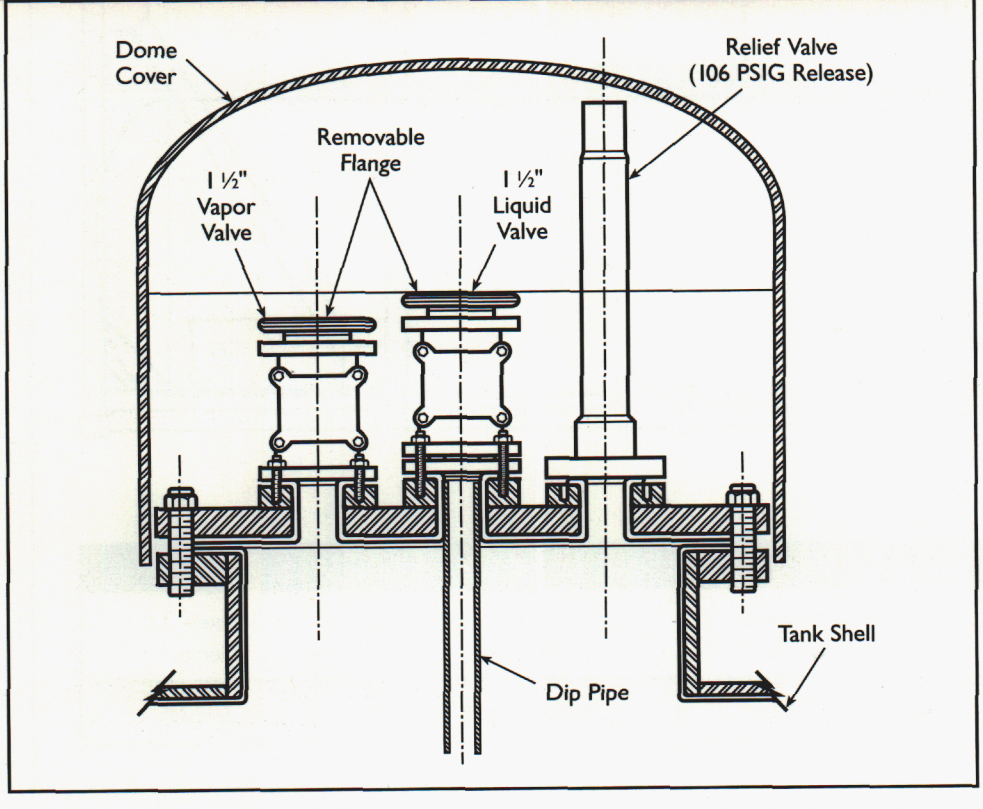

MATERIALS OF CONSTRUCTION

Bromine is corrosive to most common materials of construction. Aluminum should be avoided because it can ignite.

Bromine is hygroscopic and, when exposed to the atmosphere, the water content rises rapidly and may exceed 300 ppm depending on the humidity. Because the corrosiveness of bromine is drastically increased by this moisture, it should normally be stored under dry nitrogen or dry air [less than -40°F (-40°C) dewpoint]. Dry nitrogen purging is a recommended method for preventing moisture intrusion into storage tank and processing vessels. Bromine is nonreactive to certain metals if the water content is kept below about 30 ppm. If the water content increases above 70 ppm, the bromine may be considered wet, and corrosivity to many metals increases greatly. Ceramic materials, with the exception of carbon or graphite, are quite resistant to bromine, wet or dry. Polymeric resin materials generally are not acceptable with bromine.

Various corrosion guides should be consulted by the corrosion specialist. Some additional information on specific materials of construction is outlined below.

Glass and other ceramic materials designed for use in chemical handling systems are completely satisfactory for service in wet or dry bromine. Carbon and graphite can be expected to react with bromine. Glass-lined steel vessels and chemical stoneware are frequently used in permanent bromine systems. These materials are, however, subject to mechanical damage and deterioration or failure from thermal shock. Unreinforced glass piping and equipment are generally avoided due to the safety hazard associated with this brittle material.

Lead (nonalloyed or chemical lead per ASTM B29) is the most versatile material for use in dry (< 30 ppm H_2O) bromine storage and process vessels, usually in the form of lead-lined steel. Lead is initially attacked by bromine, forming a coating of lead bromide which prevents further corrosion. Above about 75 ppm water in bromine, lead is attacked and should not be used. Additionally, the presence of very small amounts of hydrobromic acid (HBr) or certain species of heavy, brominated organics have been found to markedly accelerate the corrosion rate of lead in bromine.

Nickel 200 and Nickel Alloys such as Monel 400™ and Hastelloys™ B and C find use in systems handling dry bromine (< 30 ppm water). These materials are rapidly corroded by wet bromine. Nickel is used in pumps, valves, vaporizers and as tank linings for bromine trailers.

Tantalum and columbium are extremely resistant to wet or dry bromine, but not commonly used because of cost. In the presence of elevated temperatures [> 200°F (> 93°C)] and/or water or acid in the bromine, tantalum is recommended for use in reboilers, condensers and linings for columns and drums. Certain combinations of bromine/methanol have been found to attack tantalum.

Titanium is successfully used for handling bromine containing free-phase water, as long as stagnant areas are not present. Dry bromine and quiescent wet bromine will cause titanium to ignite spontaneously. This behavior, and the applicability of titanium in bromine, is very similar to that of titanium in chlorine.

Fluoropolymers, both fully-fluorinated (TFE, PFA, FEP and Kalrez™) and partially-fluorinated (PVDF Kynar® or Sygef,™ E-CTFE Halar,™ E-TFE Tefzel® and Viton®) have very good resistance to bromine. Bromine, however, can permeate these polymers at rates determined by service conditions and this should be considered carefully when using these materials. Viton® and Kalrez® are elastomers used for o-rings, seals and diaphragms in bromine service. Viton tends to swell excessively in wet bromine, and consequently is not normally used for these services. The fluoroplastics are widely used as linings in pumps, piping, valves and instrumentation for bromine handling and processing. Construction combining both a fluoroplastic lining and a fiberglass structural shell is often used for columns and drums in bromine processes. This type of construction is commonly called dual-laminate FRP.

Steel and stainless steel materials are not recommended for use in bromine process systems. Bromine vapor in the atmosphere of the processing area severely attacks all ferrous alloys. Inorganic bromides have been found to cause stress corrosion cracking of austenitic stainless steel under certain conditions.

Plastics and resins other than the fluoropolymers generally give unsatisfactory service (including fiber-reinforced plastics). Polypropylene (PP) and Polyvinyl-chloride (PVC) plastic piping have been used on a limited basis for ambient temperature vapor collection systems. These systems are designed to be full draining, so condensate cannot accumulate in the vent piping.

Storage Tank & Related Equipment

Bulk storage vessels for bromine should be lead-lined or glass-lined, designed and built to the requirements of the ASME code for pressure vessels. Storage vessels should be designed for full vacuum, 150 to 250 psig (10 - 17 bar) working pressure and 250°F (121°C) temperature. The maximum amount of bromine that can be put into a storage vessel should not exceed 90 percent of capacity, to allow for vapor expansion.

Bromine storage vessels should be located in an area where the temperature can be kept above 19°F (-7.2°C) to prevent freezing. The area should be cool, dry and out of direct sunlight to prevent the build-up of potentially dangerous pressure in the vessel. Storage vessels may be located in a well-ventilated building to protect against rain and moist air. They should be vented through a caustic or water scrubber, under positive nitrogen pressure to prevent backup of moist air into bromine storage. A seal loop may be installed before the vent scrubber to prevent back-up into the storage tank. Bromine storage facilities should be located in a diked area to contain spills. Although concrete is significantly attacked by bromine, it is used for diking storage areas in the event of a leak or catastrophic failure. For longevity, the concrete should be protected with a splash and spill resistant coating, such as Overkote™ modified novolac epoxy made by CPS, Inc. of Tulsa, OK or Tufchem™ potassium silicate manufactured by Atochem, N.A., Philadelphia, PA.

Water should be available in case of a spill. Due to specific gravity, bromine will stay below water, reducing vapor emissions. Leaks may be controlled by covering the area around the leak with dry ice, thus freezing and solidifying the bromine so that the leak can be repaired.

No organic materials should be stored in the same general area. Any open-ended pipelines leading to and out of the storage vessel should be closed with a blind flange when not in use. No valves or cocks should be relied upon to contain liquid bromine. Pipelines should be sloped, allowing bromine to drain to the storage tank.

The vessel should be equipped with adequately-sized pressure relief valves. To permit use of conventional carbon steel relief valves, tantalum rupture disks are used to isolate bromine vapor from the valves. To permit periodic removal for inspection, two valves can be provided with approved blocks. Each valve should be sized large enough to protect the tank from over-pressure.

Consider providing pressure, level and temperature indicators on the vessel. It is recommended that storage tanks be mounted on weigh cells. If no bottom nozzles are used, a dip leg vent valve, actuated and normally open, is recommended to eliminate pressure on the dip leg in an emergency.

Bromine can be transferred from the storage tank by using nitrogen pressure or a centrifugal or positive-displacement pump. Recommended centrifugal pumps are Durco, Goulds and Corning-NGK (PFA, TFE or ceramic wetted parts). Double mechanical cartridge seals are used with tungsten carbide inside faces and Kalrez o-rings. Use of magnetic drive centrifugal pumps in bromine service is still sparse, but environmental concerns will likely increase their use in the future. Recommended magnetic drive centrifugal pumps are Carver-Iwaki and Ansi-Mag (E-CTFE, E-TFE, ceramic and silicon carbide wetted parts). Recommended positive displacement pumps are Bran-Luebbe and Codip (TFE and glass-filled TFE wetted parts).

All equipment that comes into contact with bromine should be inspected periodically.

Equipment for Bromine Use

Pipe

1" through 6"

Schedule 40, Electrical Resistance Welded, ASTM A587 carbon steel, PVDF-lined, spooled with 150 lb flanges.

8"

Schedule 40, seamless ASTM A53 Grade B carbon steel, PVDF-lined, spooled with 150 lb flanges.

Polyvinylidene Fluoride (PVDF)-Lined Pipe

This section covers PVDF-lined steel pipe and fittings with lining flared or molded over flange face. It may or may not be vented, depending on manufacturer. For design, installation and maintenance specifics, consult Dow Chemical Co. Plastic-Lined Piping Products.

Piping with vent holes, that is to be insulated, should have vent hole extensions installed before lining. Support connections on pipe and fittings should be welded together before lining. Vent holes should not be plugged with paint or insulation.

No welding should be done on pipe or fittings after liner is installed.

Gaskets are recommended when flanging lined-pipe to lined-pipe or fittings. It is recommended that all flanged connections be shielded with Milsheff Spray-Stop™ Flange Shield or equal. Periodic inspection of all shielded flanges is required to detect and address any corrosion that may occur in the shielded area, particularly regarding the flange bolting. Maintenance needs are detected easily if piping is painted white or light gray.

Due to the permeant and corrosive nature of bromine, it is strongly recommended that valves be specified with live-loaded packing glands, using Belleville spring washers.

Clamp Gate Valves

6" down

150 lb flanged clamp, ductile iron body, stainless steel stem, TFE tube jacket and insert.

Ball Valves

1" through 8"

150 lb flanged, standard port, PFA-lined ductile iron body, PFA-coated ball, TFE seats and seals

or

150 lb flanged, standard port, E-TFE-lined ductile iron body, E-TFE-coated ball, TFE seats and seals.

Butterfly Valves

2" up

150 lb wafer, ductile iron body and disc, TFE-lined body, PVDF-coated disc, 410 stem, lever handle 6" and smaller, worm gear operator 8" up

or

150 lb wafer, ductile iron body and disc, TFE-lined body w/ Viton seat backing, PFA-coated disc, Viton seals, lever operator.

Check Valves

1" through 6"

150 lb flanged, ball check, ductile iron body, PVDF-lined, TFE ball.

Diaphragm Valves

1" through 8"

150 lb flanged, ductile iron. PVDF-lined, TFE-faced EPDM diaphragm, handwheel, telltale stop.

Plug Valves

1" through 6"

150 lb flanged, nonlube, TFE or PFA-lined ductile iron body, TFE or PFA-coated plug.

Relief Valves

Tantalum rupture disk under carbon steel safety valve. Consider installing a dual relief system, so tank can remain in service while rupture disk is being changed.

Bolting

All sizes

A193 Grade B7 stud bolt with two A194 Grade 2H heavy hex nuts.

Fittings

1" up

150 lb flanged, ductile iron body per ASTM A395 Grade 60-40-18, PVDF-lined.

Flanges

All flanges should be ANSI B16.5 dimensions, integral with the pipe spools and fittings except blind flanges should be ASTM A105 forged steel with full face 1/8" (3.175 mm) thick TFE cover gasket.

Gaskets

1/8" (3.175 mm) thick, flat ring, old standard dimensions (ID=nominal pipe size), Garlock Blue Gylon™ style 3504.

Transfer Hose

All sizes

TFE liner, 321 stainless steel corrugated metal hose, 321 stainless steel over braid. Each end shall have a carbon steel lap joint stub end with a 150 lb ductile iron lap joint flange. TFE liner shall completely cover the raised face of the lap joint stub end. Rate 150 psig (10 bar) at 350°F (177°C).

Chart 1 • Specific Gravity

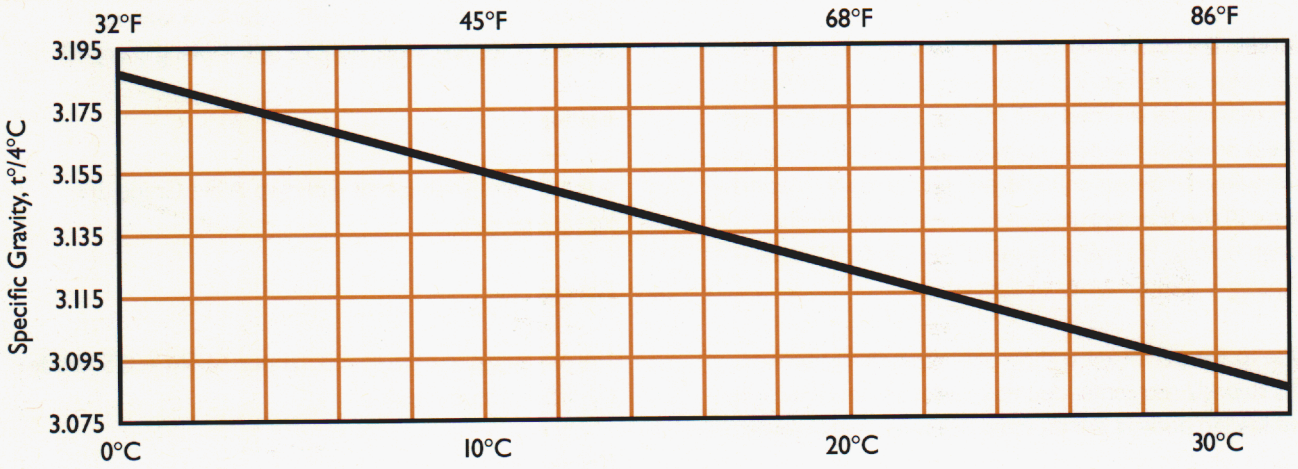

Chart 2 • Solubility in Water

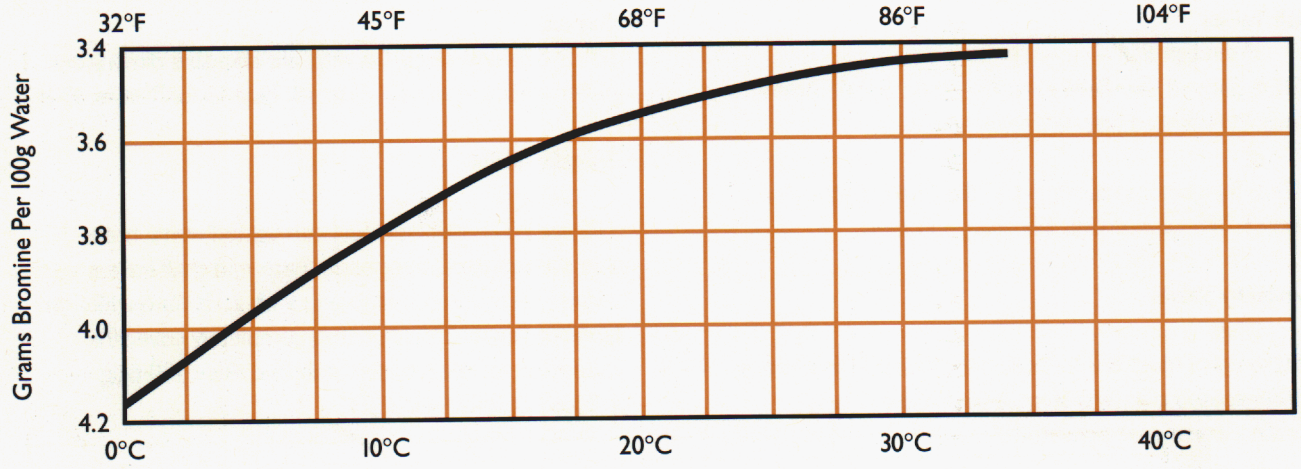

Chart 3 • Liquid Density

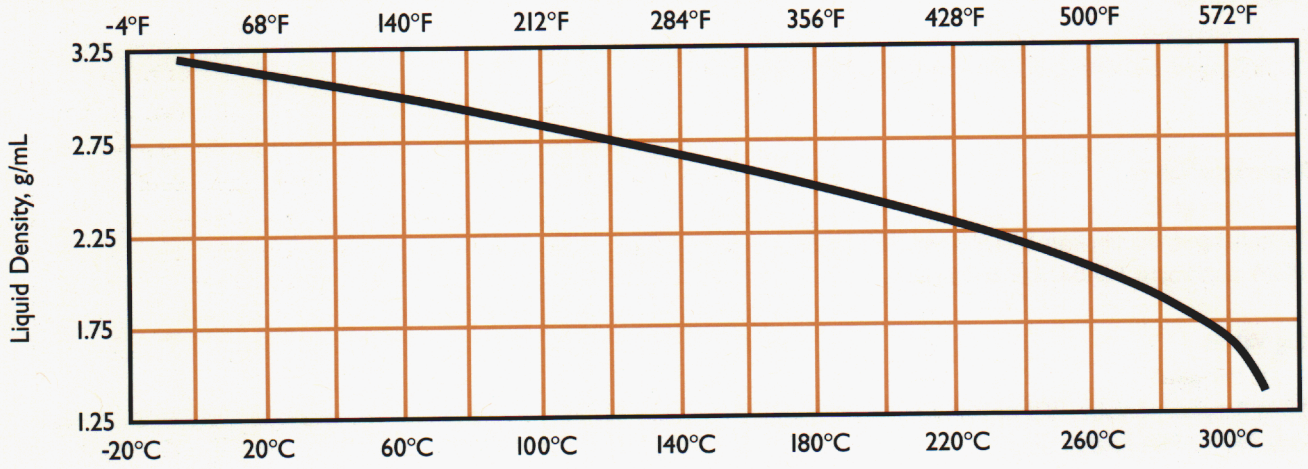

Chart 4 • Vapor Pressure, °F

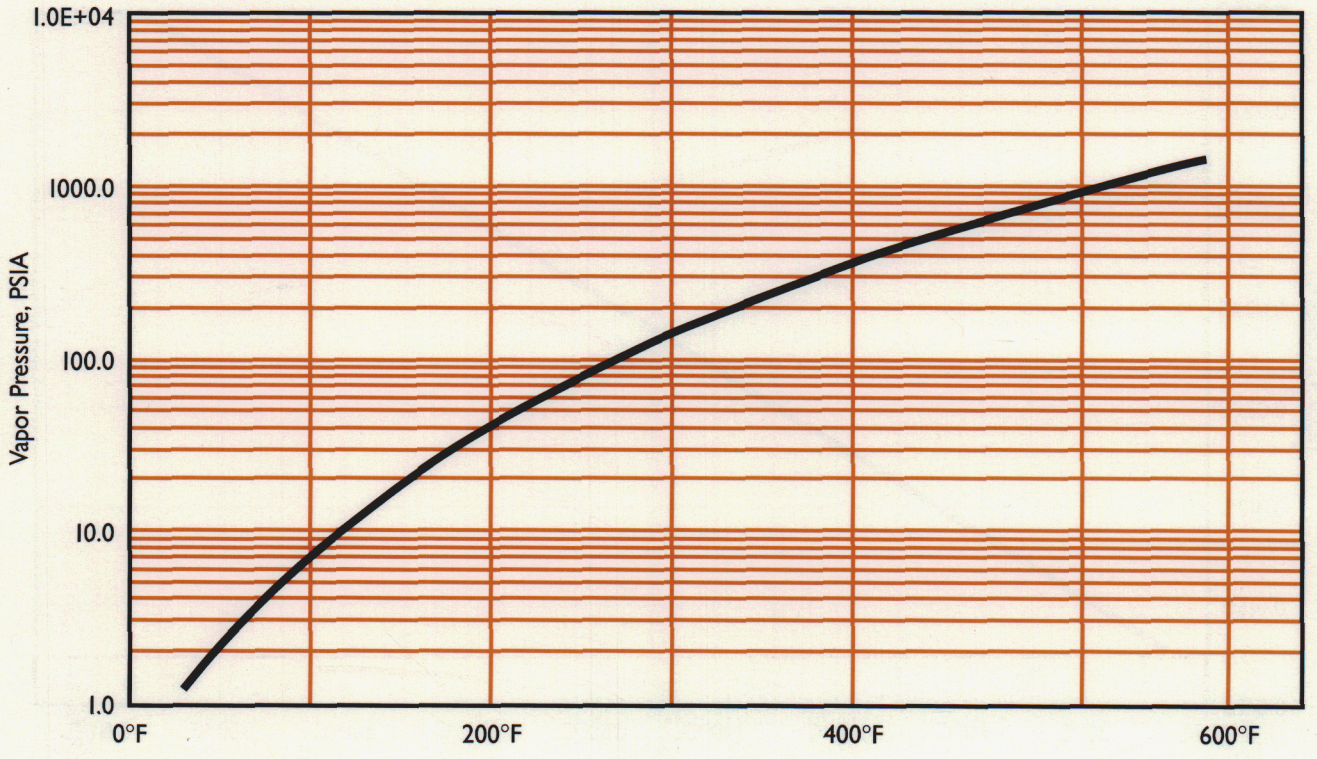

Chart 5 • Vapor Pressure, °C

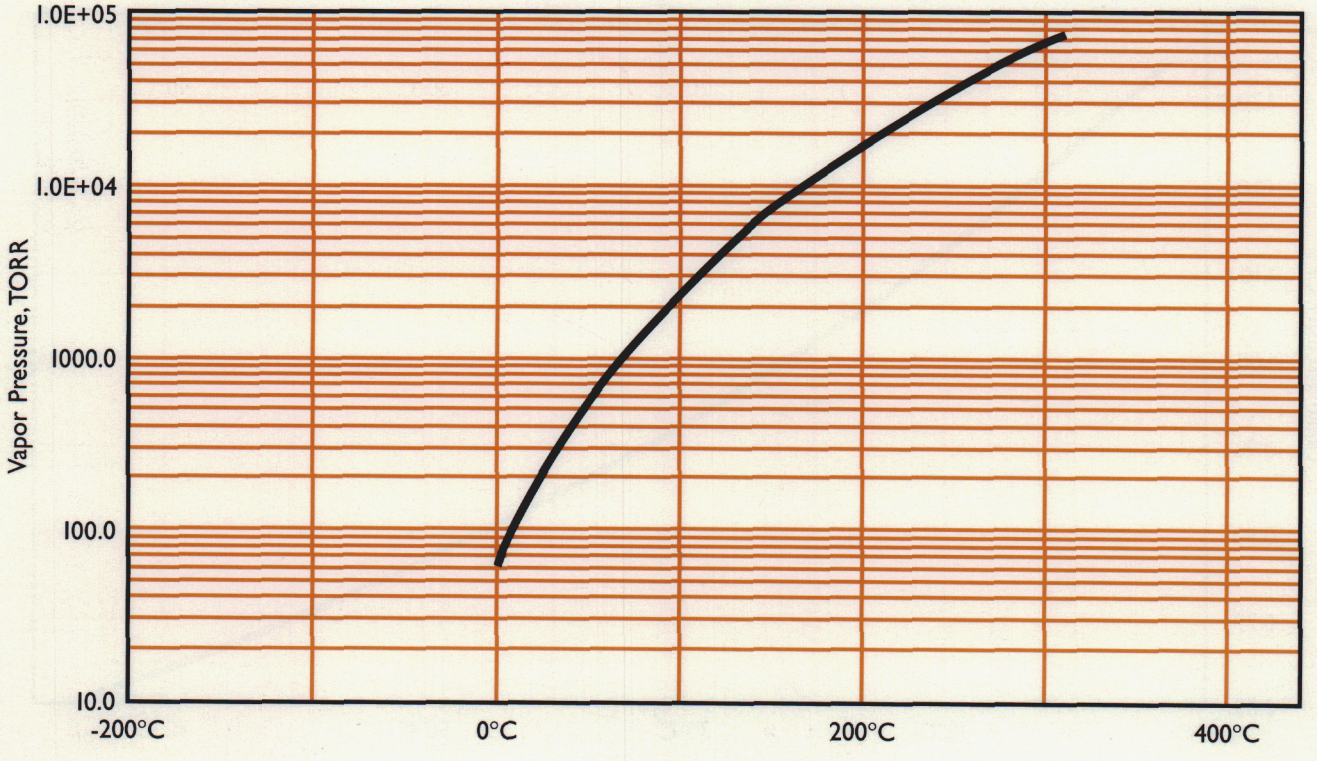

Chart 6 • Vapor Viscosity

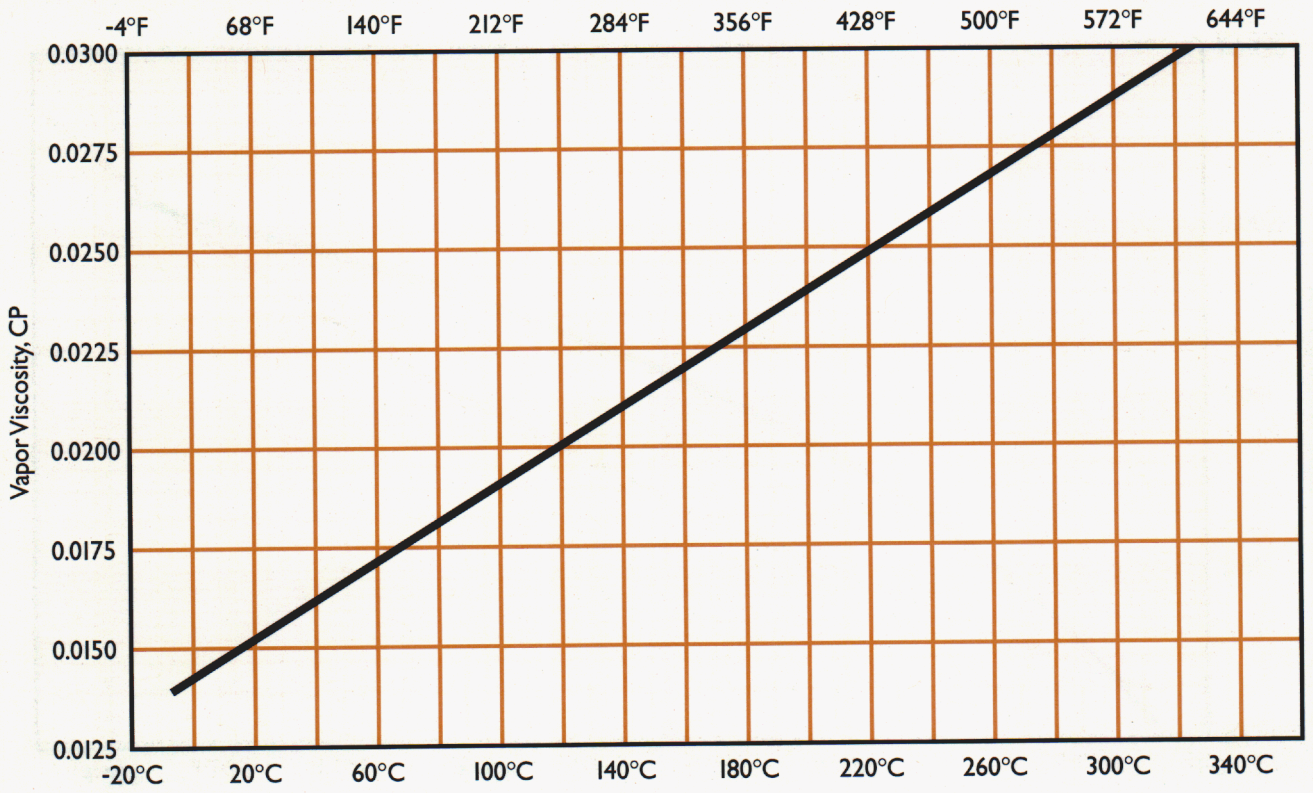

Chart 7 • Liquid Viscosity

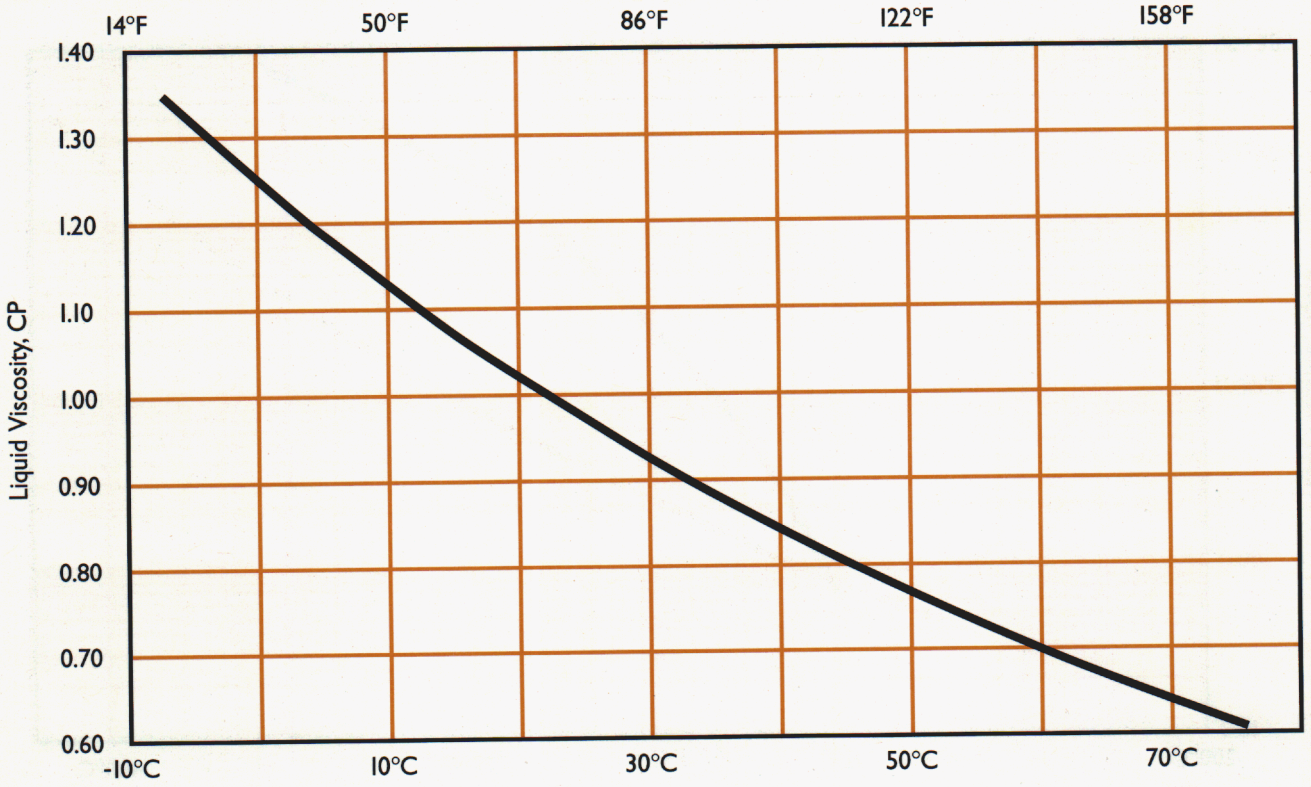

Chart 8 • Vapor Thermal Conductivity, °F

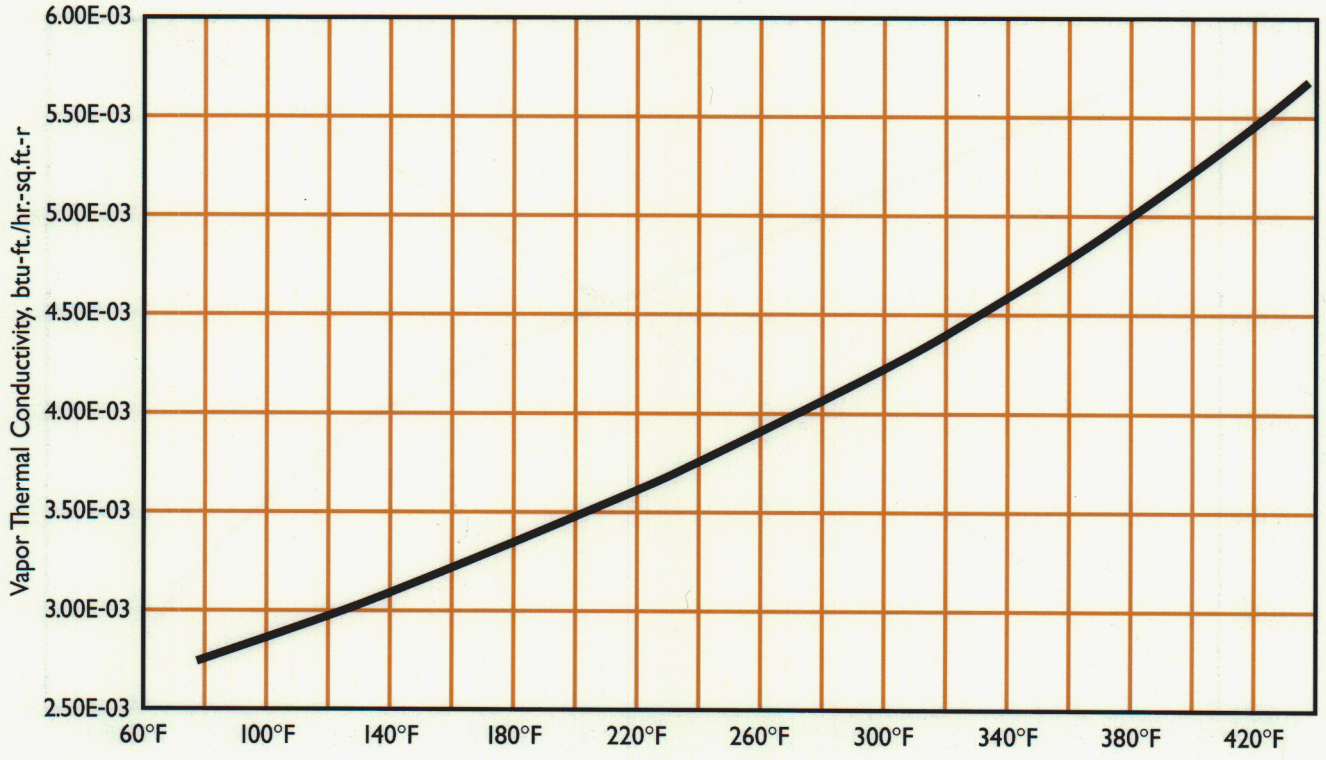

Chart 9 • Vapor Thermal Conductivity, °C

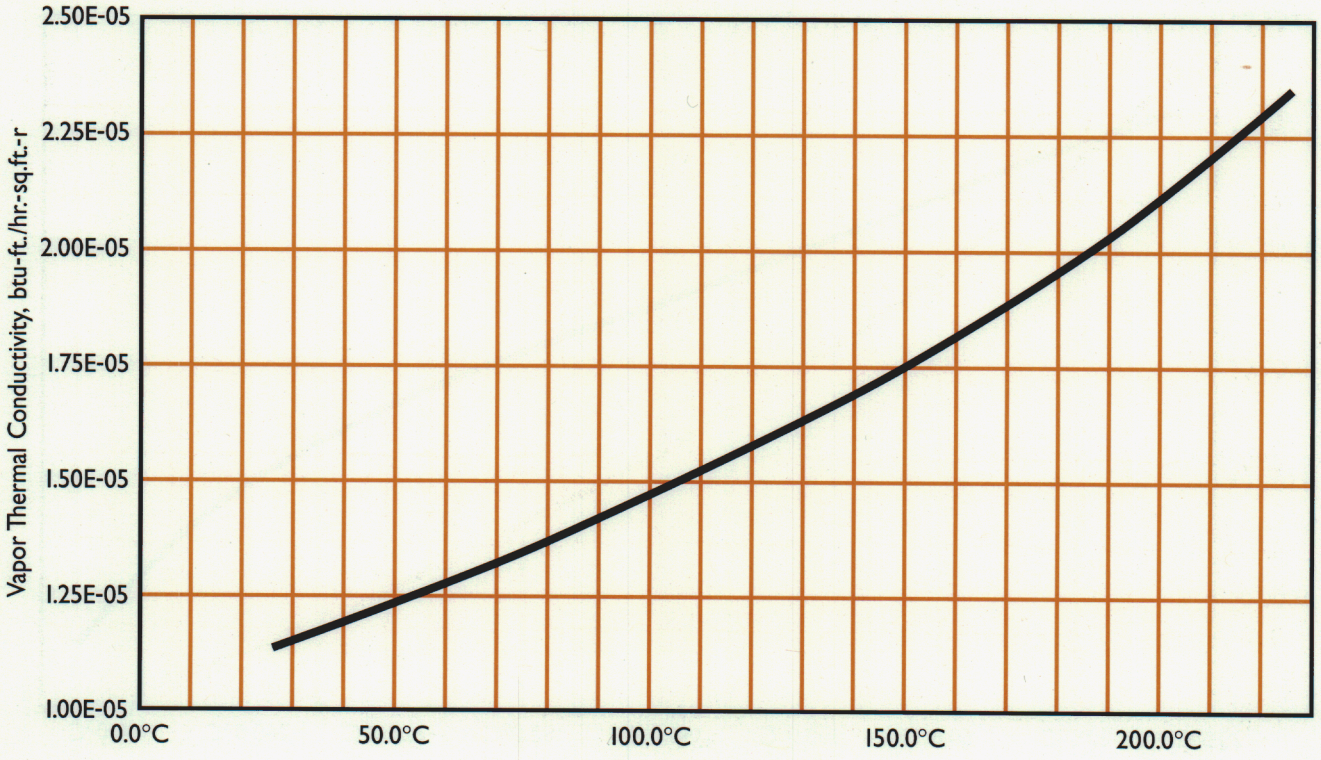

Chart 10 • Liquid Thermal Conductivity, °F

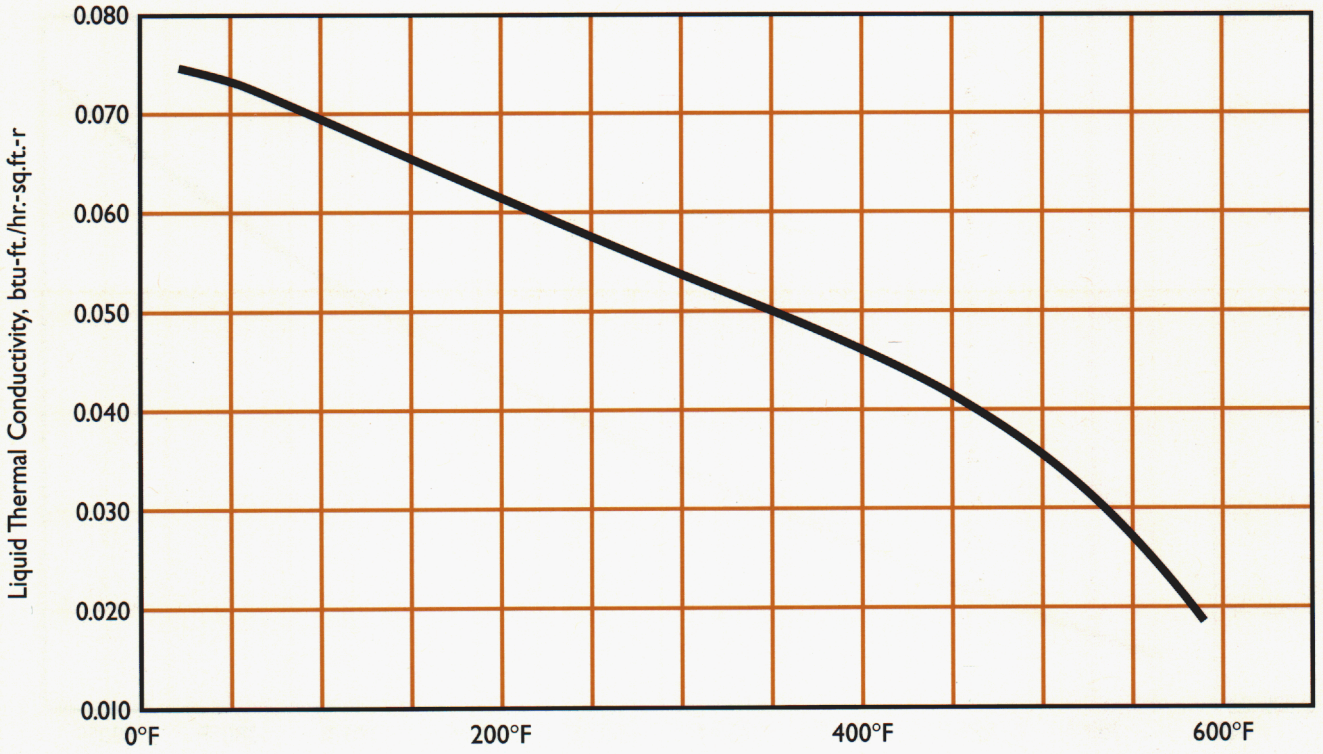
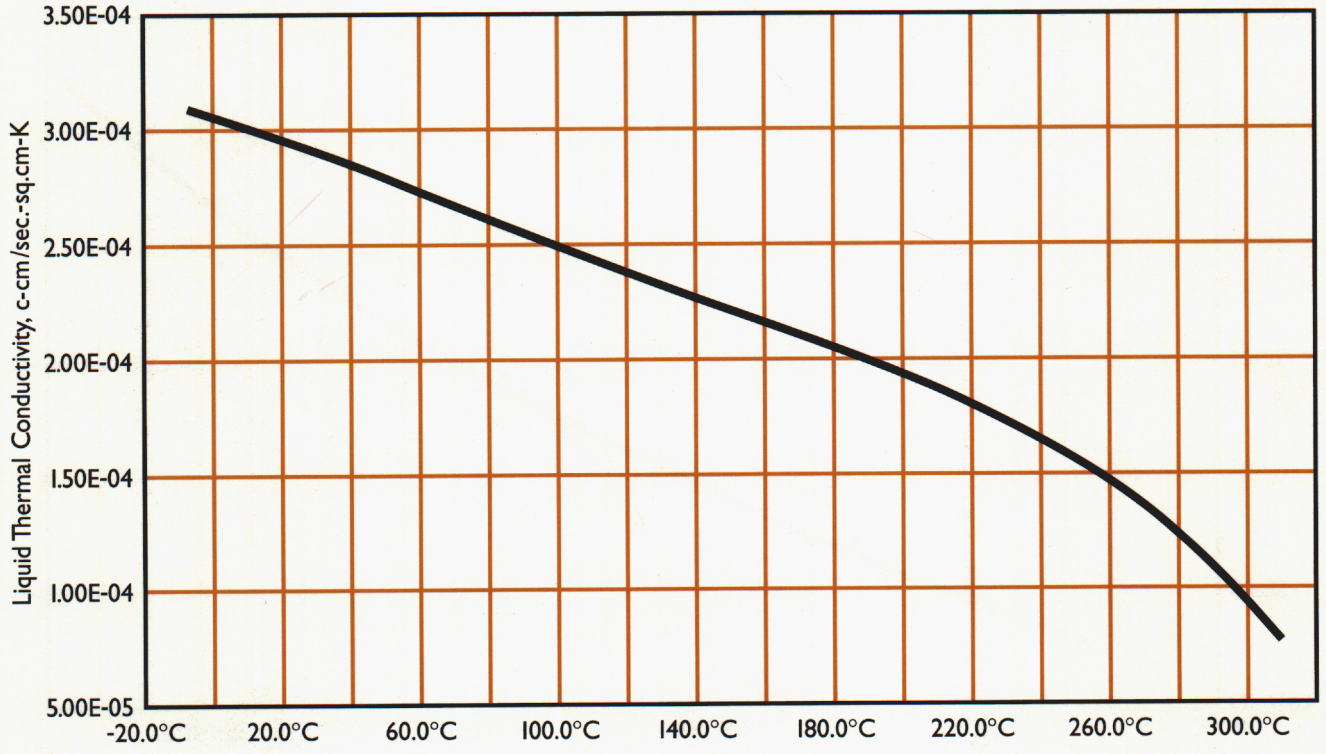
Chart 11 • Liquid Thermal Conductivity, °C