UCRL-CONF-213907

LAWRENCE
LIVERMORE
NATIONAL
LABORATORY

Large-Scale Metrology Design-Coordinate Generation and Verification

J. K. Villanueva Jr.

July 22, 2005

Coordinate Measuring Systems Conference
Austin, TX, United States
July 18, 2005 through July 22, 2005

This document was prepared as an account of work sponsored by an agency of the United States Government. Neither the United States Government nor the University of California nor any of their employees, makes any warranty, express or implied, or assumes any legal liability or responsibility for the accuracy, completeness, or usefulness of any information, apparatus, product, or process disclosed, or represents that its use would not infringe privately owned rights. Reference herein to any specific commercial product, process, or service by trade name, trademark, manufacturer, or otherwise, does not necessarily constitute or imply its endorsement, recommendation, or favoring by the United States Government or the University of California. The views and opinions of authors expressed herein do not necessarily state or reflect those of the United States Government or the University of California, and shall not be used for advertising or product endorsement purposes.

LARGE-SCALE METROLOGY
DESIGN-COORDINATE GENERATION AND VERIFICATION

Coordinate Measuring Systems Conference
Austin, Texas

John K. Villanueva Jr.
Senior Engineering Associate
Systems Engineering

July 2005

Auspices Statement

The National Ignition Facility

Auspices Statement

This work was performed under the auspices of the U.S. Department of Energy by University of California, Lawrence Livermore National Laboratory under Contract W-7405-Eng-48.

Acknowledgements

The National Ignition Facility

To my colleagues and mentors with whom I share in this presentation:

Lawrence Livermore National Laboratory
Scott Burkhart
Gary Curnow
Bruce Jahn
Tom McCarville
Daniel Nelson

Lockheed Martin
David McCarten

Maglev, Inc
Steve Hand

Sandia National Laboratory
William S. Rorke

Perspective

The National Ignition Facility

- NIF is the largest laser in world
- Thousands of control features
- Sub-millimeter tolerances
- How does one generate design coordinates with the highest degree of accuracy?

and

- How does one communicate that information in a clear and concise way?

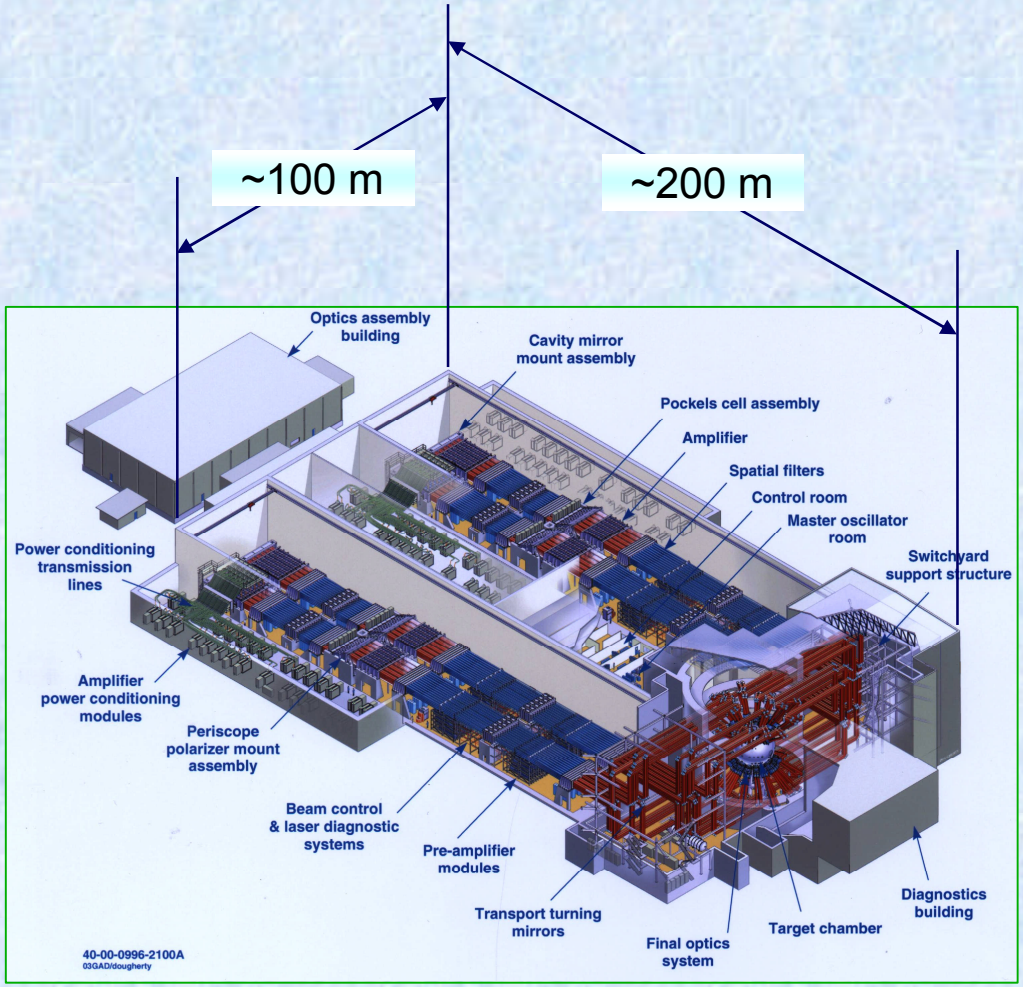

Global and Local Coordinate Systems

The National Ignition Facility

- Global CS

-Highest Level CS

-Passes Down Local CS'

-Local CS is Parametric

-Broken Links Produce "Dead models"

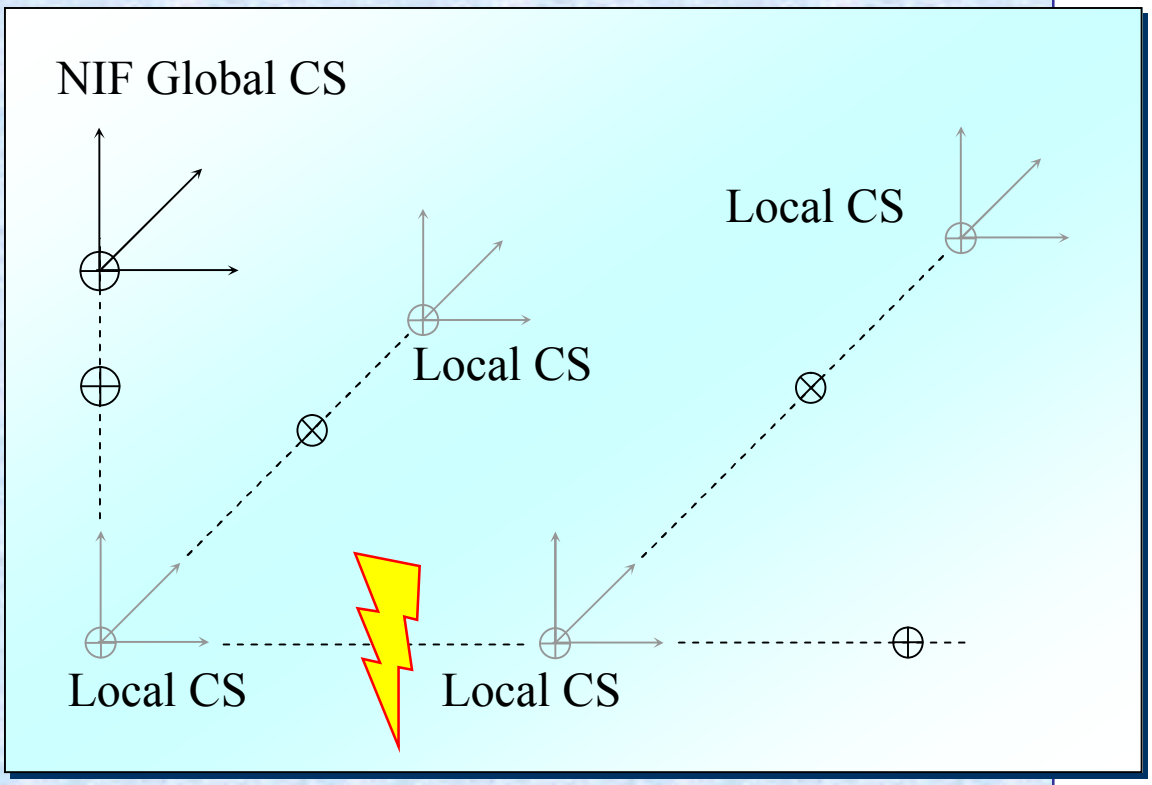

-NIF has hundreds of Local Coordinate Systems . . .

Naming Convention

The National Ignition Facility

- NIF coordinate measuring environment has in excess of 10,000 control features
- The ability to identify a point location by its name adds value

-Assists Installation

-Speeds Processing

-Aids Analysis

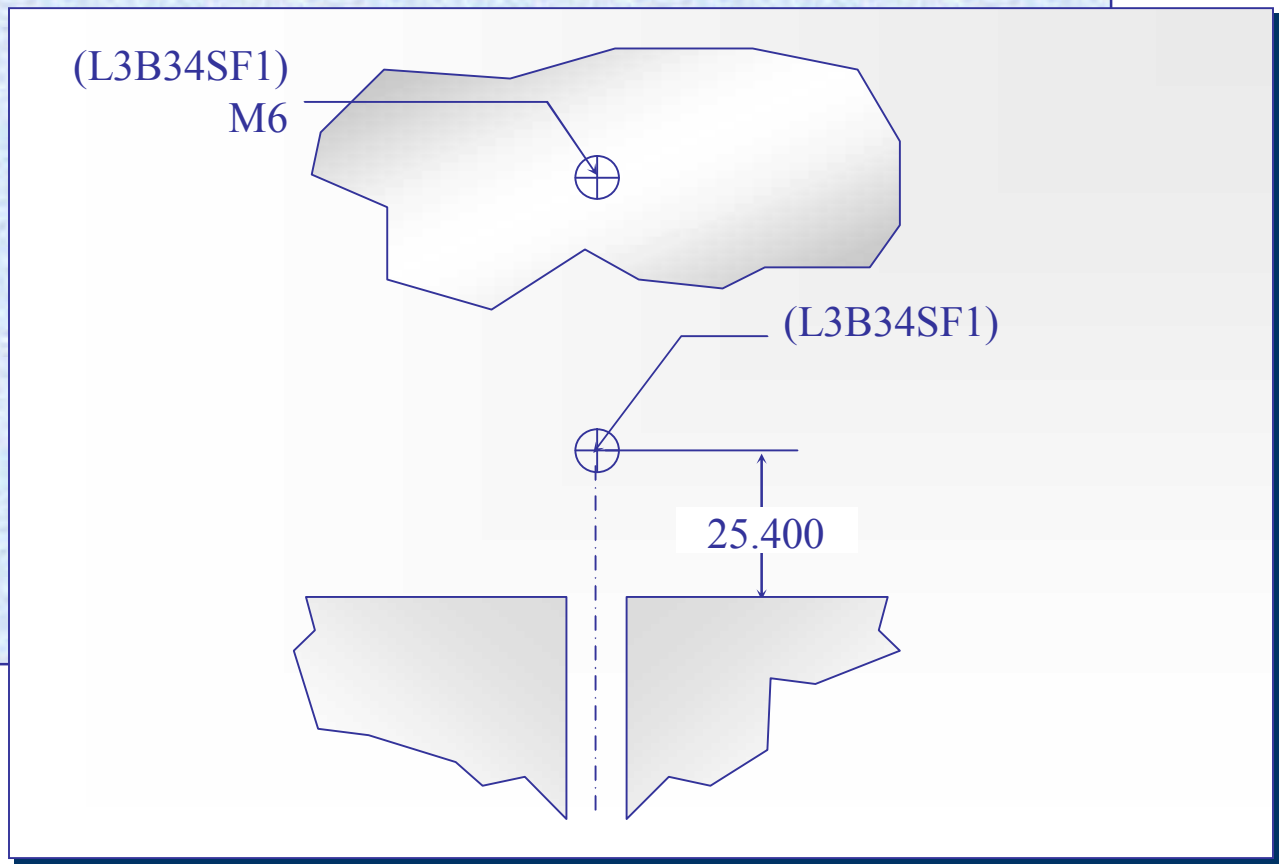

Naming Convention

The National Ignition Facility

- A Naming Convention has to *make sense*

-Comprehensive

-Expandable

-Universal

-Relevant

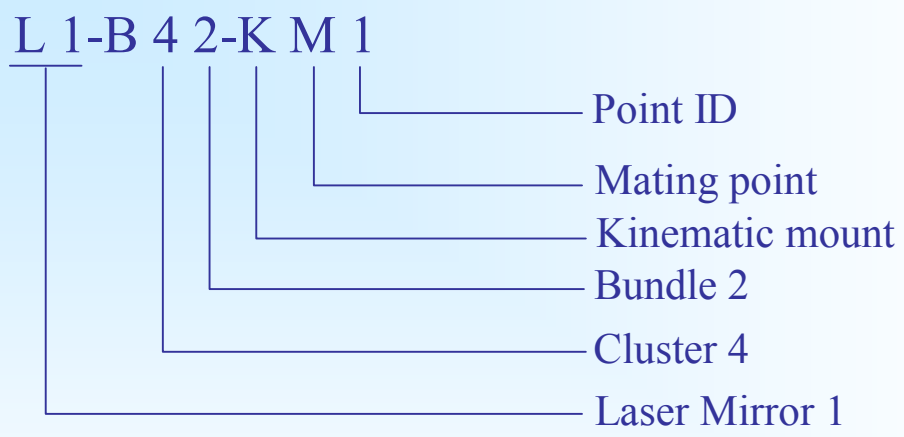

PSF ID Naming Convention Example
(DASHES INSERTED FOR CLARITY)

Computer Aided Design (CAD)

The National Ignition Facility

- Drawing-Triad Functions and Relationships

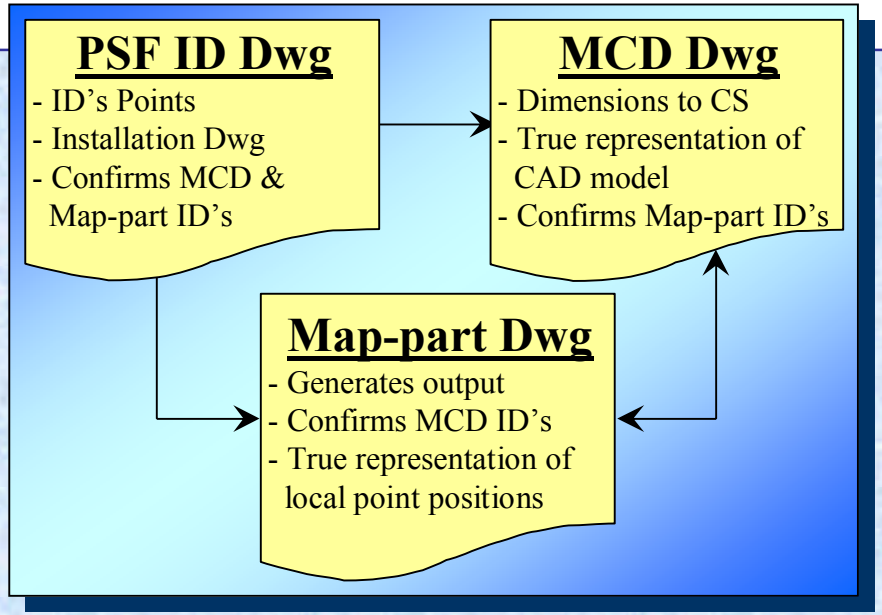

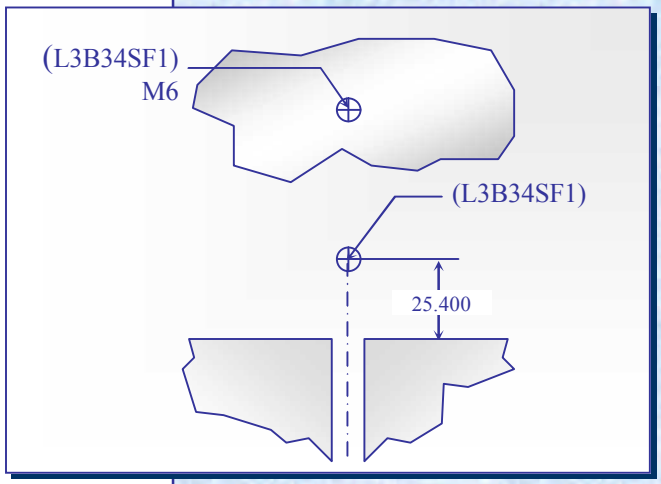

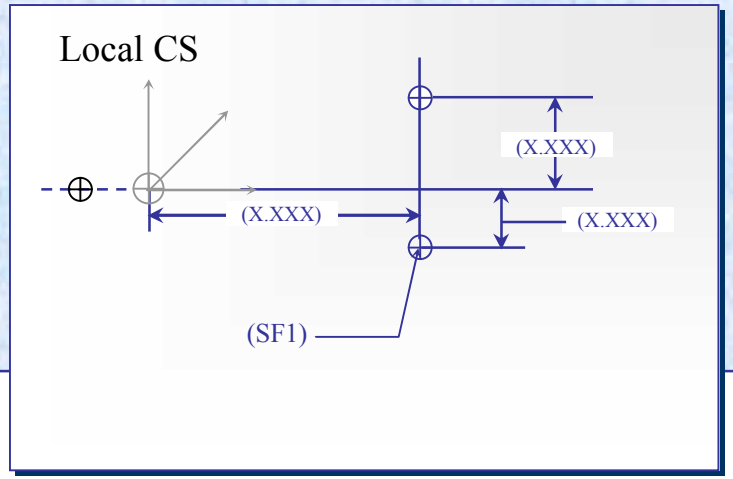

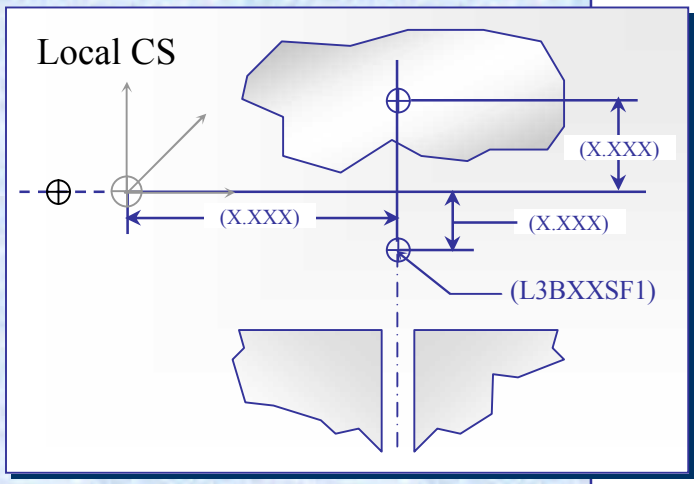

Coordinate Generation Process Flow

The National Ignition Facility

- Getpoints/Putpoints Process
  - -Appended the CAD Program to Extract and Upload PSF ID's and Coordinates
  - -Getpoints Extracts
  - -Putpoints Uploads
  - -Output:

    Point IDs

    &

    Corresponding Coordinates

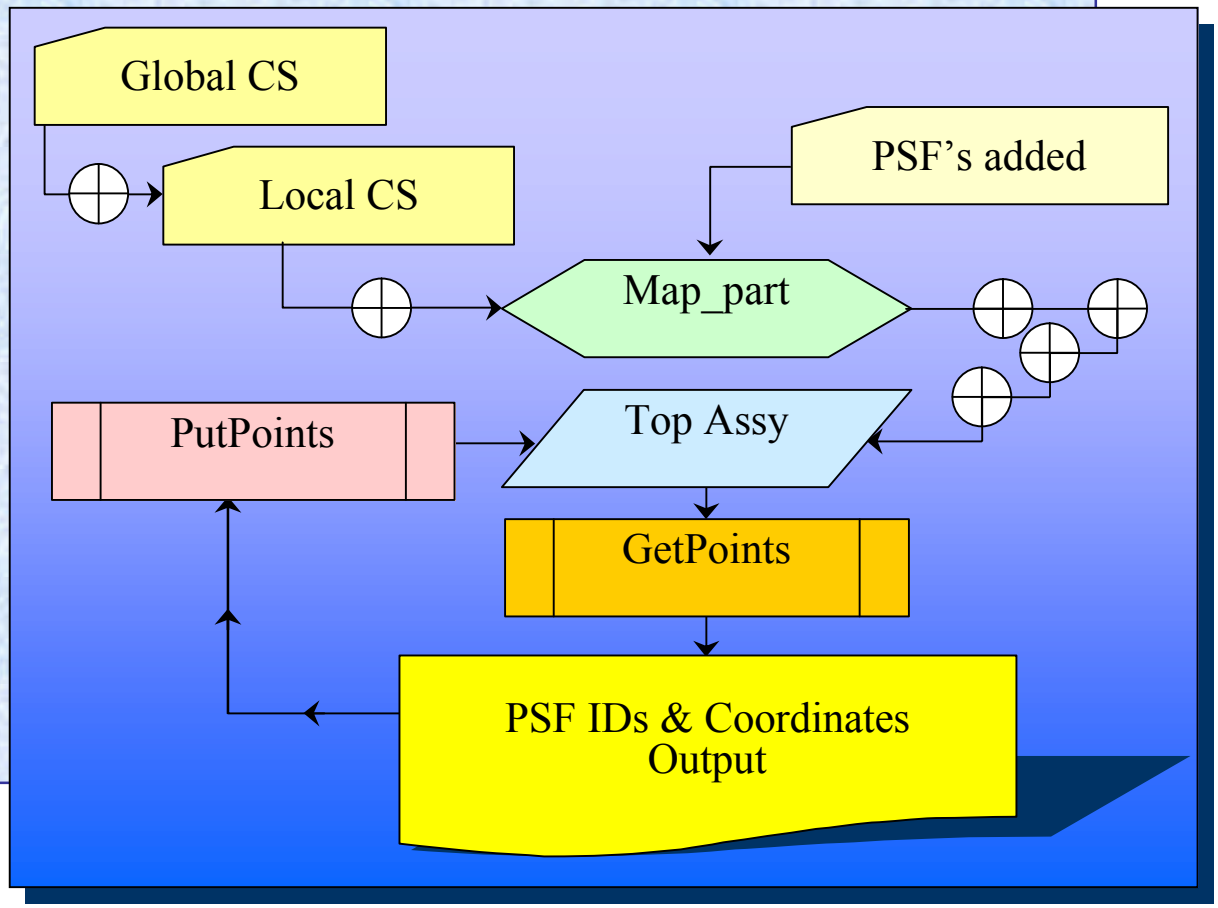

Electronic Coordinate Generation

The National Ignition Facility

-Typical Getpoints Output Data File

PSF ID	X	Y	Z
NIF Global	0.000	0.000	0.000
P111LDR1	42002.605	1620.941	123038.935
P111LDR2	42002.605	1620.941	122893.935
P111LDR3	42002.605	873.817	123188.321
P111LDR4	42002.605	873.844	123112.121
P111LDR5	42003.011	1017.851	124545.200

8 character unique ID

Output to one micron

Verification Worksheet Data Flow Process

The National Ignition Facility

- *"What's a Form A File?"* (B,C & D)

  -Single Source Document containing:

  >Raw Output Data/Supporting Documentation

  >Verifications Worksheets/Mathematical Proofs

  >Raw Output Data

  >ID's & Coordinates

  >Tolerances

  >Field Working File

  >Post Analysis Archive of As-built Data

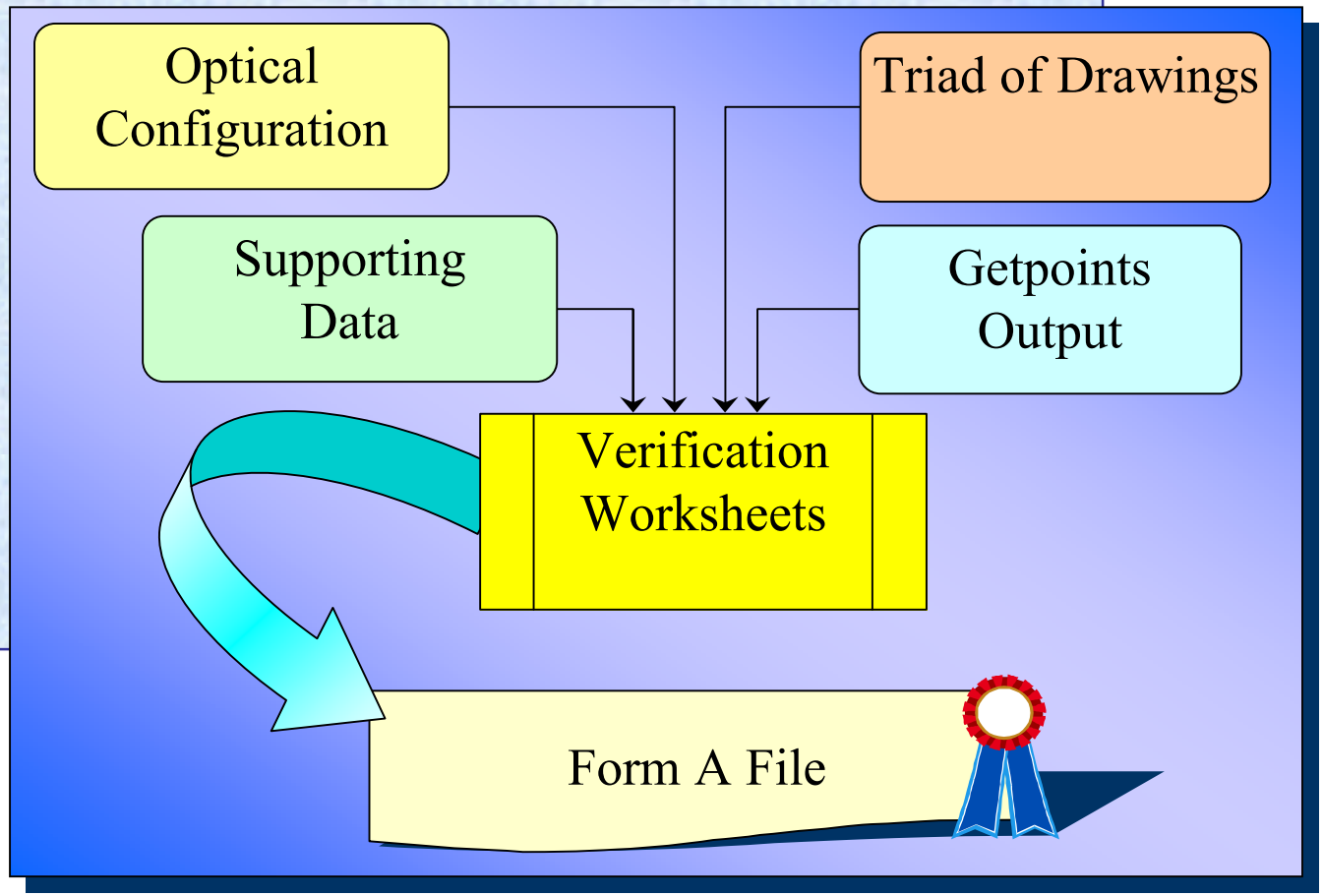

Form A Linear Sequence

The National Ignition Facility

- How a Form A File Moves through a Measurement

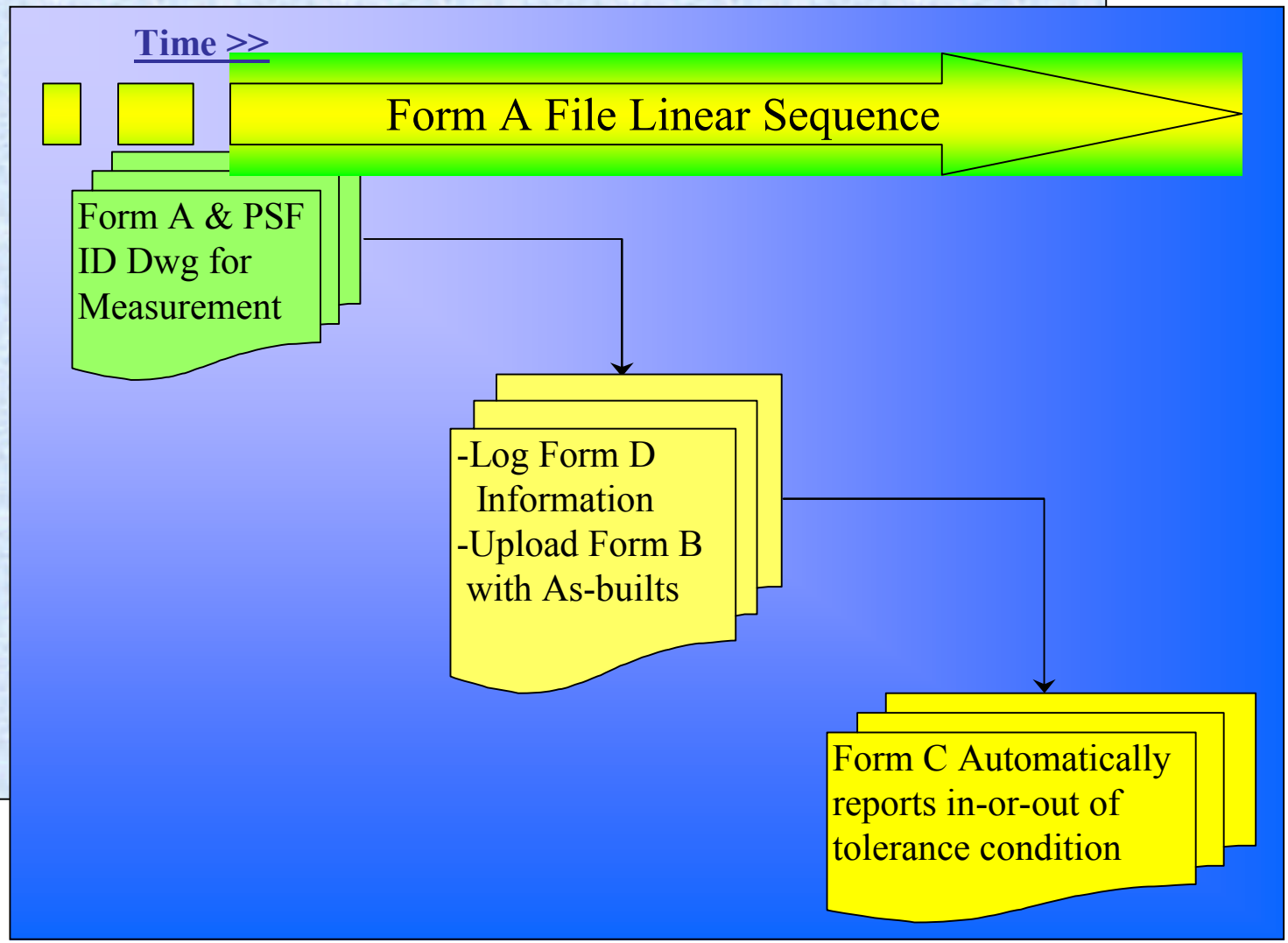

Form A, Tab Form A Example

The National Ignition Facility

- ID's, Coordinates, and Tolerances

Part Name:	Cavity Spatial Filter
Serial Number:	--
FORM A NIF Document Num.	NIF-5002734
Location:	Cluster 3
Template Revision:	01/05/00
Data Last Changed by:	John Villanueva
Date of Last Data Change:	11/22/00
CSP:	13

NOTES:
[1] VALUE TO BE SPECIFIED BY UNIVERSITY PRIOR TO ACTUAL INSTALLATION.

2. BLANK CELLS AND CELLS CONTAINING "--" DO NOT IMPOSE A REQUIREMENT. VALUES NOT ASSOCIATED WITH A TOLERANCE ARE PROVIDED BY UNIVERSITY FOR REFERENCE AND ARE NOT A FORMAL REQUIREMENT.

[3] SUBMITTAL DATA IS REQUIRED.

GLOBAL POSITION (TRANSLATION)

SPECIFICATION

UNIVERSITY PROVIDED DATA											COMPUTED DATA					
PRECISION SURVEY FEATURES					Specified Coordinate (mm) (Items not associated with a tolerance are for reference only. Their coordinates are not specified.)			Total Tolerance (± mm)			Allowable Coordinates (mm)					
REFERENCE DRAWING	PART	LOCATION	FEATURE	POINT ID	X	Y	Z	X	Y	Z	X		Y		Z	
	CF	Cluster 3									Min	Max	Min	Max	Min	Max
AAA99-107834	CF	B30	SSF	CFB30SSF	-21730.05	5692.67	49149.54	--	--	1.00	--	--	--	--	49148.54	49150.54
AAA99-107834	CF	B30	SS4	CFB30SS4	-21736.94	3546.77	49149.65	2.00	2.00	1.00	-21738.94	-21734.94	3544.77	3548.77	49148.65	49150.65
AAA99-107834	CF	B30	SS3	CFB30SS3	-29233.98	3550.86	49150.28	--	2.00	1.00	--	--	3548.86	3552.86	49149.28	49151.28
AAA99-107834	CF	B30	SSE	CFB30SSE	-29224.48	5699.29	49150.04	--	--	1.00	--	--	--	--	49149.04	49151.04
AAA99-108766	CF	B30	NS1	CFB30NS1	-21114.76	2825.35	48417.99	--	0.50	1.50	--	--	2824.85	2825.85	48416.49	48419.49
AAA99-108766	CF	B30	NS2	CFB30NS2	-24114.38	2826.33	48420.94	0.50	0.50	--	-24114.88	-24113.88	2825.83	2826.83	--	--
AAA99-108766	CF	B30	NS3	CFB30NS3	-26851.15	2828.30	48413.57	--	0.50	--	--	--	2827.80	2828.80	--	--
AAA99-108766	CF	B30	NS4	CFB30NS4	-29853.30	2829.48	48420.37	--	0.50	1.50	--	--	2828.98	2829.98	48418.87	48421.87
AAA99-108766	CF	B30	NS5	CFB30NS5	-29851.96	2837.75	47430.83	--	0.50	--	--	--	2837.25	2838.25	--	--
AAA99-108766	CF	B30	NS6	CFB30NS6	-26849.43	2836.58	47404.87	--	0.50	--	--	--	2836.08	2837.08	--	--
AAA99-108766	CF	B30	NS7	CFB30NS7	-24112.76	2832.92	47423.19	--	0.50	--	--	--	2832.42	2833.42	--	--
AAA99-108766	CF	B30	NS8	CFB30NS8	-21113.81	2831.14	47446.76	--	0.50	--	--	--	2830.64	2831.64	--	--

Form A / Form B / Form C / Form D / Submittals / Revision History

Form A, Tab Form B Example

The National Ignition Facility

- ID's, Coordinates, As-built Data, and Uncertainties

Part Name:	Cavity Spatial Filter
Serial Number:	--
FORM B NIF Document Num.	NIF-5002734
Location:	Cluster 3
Template Revision:	01/05/00
Data Last Changed by:	John Villanueva
Date of Last Data Change:	03/02/01
CSP:	13

NOTES:
[1] VALUE TO BE SPECIFIED BY UNIVERSITY PRIOR TO ACTUAL INSTALLATION.

2. BLANK CELLS AND CELLS CONTAINING "--" DO NOT IMPOSE A REQUIREMENT. VALUES NOT ASSOCIATED WITH A TOLERANCE ARE PROVIDED BY UNIVERSITY FOR REFERENCE AND ARE NOT A FORMAL REQUIREMENT.

[3] SUBMITTAL DATA IS REQUIRED.

GLOBAL POSITION (TRANSLATION)

SPECIFICATION					AS-BUILT					
UNIVERSITY PROVIDED DATA					CONTRACTOR PROVIDED DATA					
PRECISION SURVEY FEATURES					Best Estimate Coordinate (mm)			3-sigma Uncertainty (± mm)		
REFERENCE DRAWING	PART	LOCATION	FEATURE	POINT ID	X	Y	Z	X	Y	Z
	CF	Cluster 3								
AAA33-107834	CF	B30	SSF	CFB30SSF	-21730.80	5696.48	49149.45	0.03	0.05	0.04
AAA33-107834	CF	B30	SS4	CFB30SS4	-21737.05	3546.69	49149.65	0.03	0.04	0.02
AAA33-107834	CF	B30	SS3	CFB30SS3	-29233.66	3550.89	49150.44	0.03	0.04	0.02
AAA33-107834	CF	B30	SSE	CFB30SSE	-29225.26	5699.34	49150.26	0.04	0.05	0.04
AAA33-108766	CF	B30	NS1	CFB30NS1	-21114.75	2825.27	48417.43	0.02	0.06	0.06
AAA33-108766	CF	B30	NS2	CFB30NS2	-24114.33	2826.37	48420.40	0.01	0.02	0.02
AAA33-108766	CF	B30	NS3	CFB30NS3	-26851.20	2828.27	48413.12	0.01	0.01	0.01

Form A | Form B | Form C | Form D | Submittals | Revision History

Form A, Tab Form C Example

The National Ignition Facility

- Compilation of Form A & B, with Post Analysis and Grading

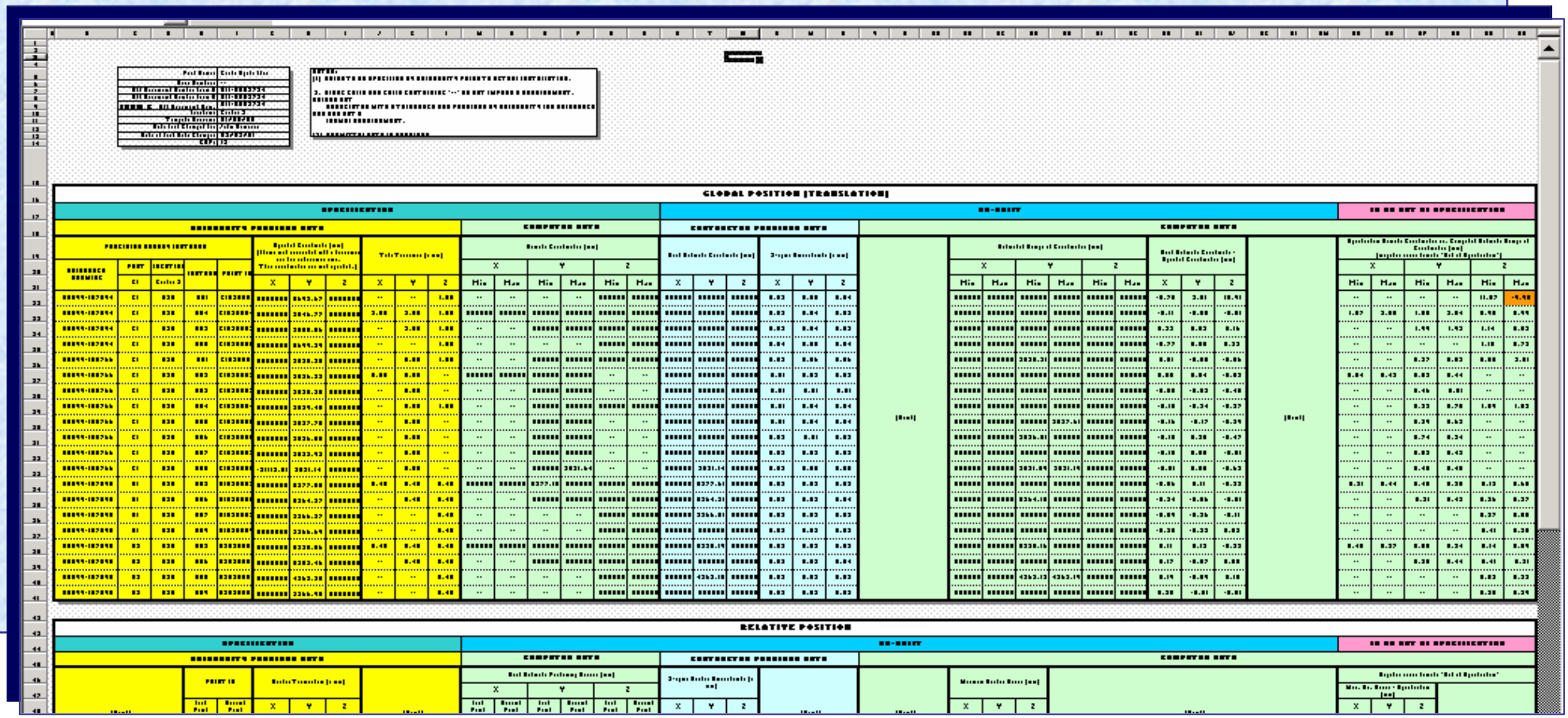

Form A, Tab Form D example

The National Ignition Facility

- Record and Log File of Pertinent Data

FORM D

Cavity Spatial Filter Cluster 3	
Operator Name	
Operator Name	
Operator Name	
Operator Name	
Instrument Data	
Manufacturer	
Model	
Serial Number	
First Measurement Data	
Date	
Time	
Port Temperature	
Ambient Temperature	
Barometric Pressure	
Station Number	

NOTES:
[1] OPTIONAL TO PROVIDE OBSERVATION DATA IN CARTESIAN FRAME RELATIVE TO INSTRUMENT GIMBAL CENTER OR POLAR (ZENITH ANGLE, HORIZONTAL ANGLE, RANGE FROM GIMBAL CENTER).
[2] ANGLE UNITS MUST BE STATED. RECOMMEND GONS FOR IMPROVED RESOLUTION AND ACCURACY.

DATA FILE

Observation Number	Station Number	Target Point Label	Time	Instrument Face (direct=1, reverse=2)	Target Type	Target Offset (mm)	X Coordinate (m) [Note 1]	Y Coordinate (m) [Note 1]	Z Coordinate (m) [Note 1]	Observed horizontal angle (gon) [Note 2]	Observed zenith angle (gon) [Note 2]	Observed range (m) [Note 2]

Form A / Form B / Form C / Form D / Submittals / Revision History

A Form A File as it Moves through a Measurement

The National Ignition Facility

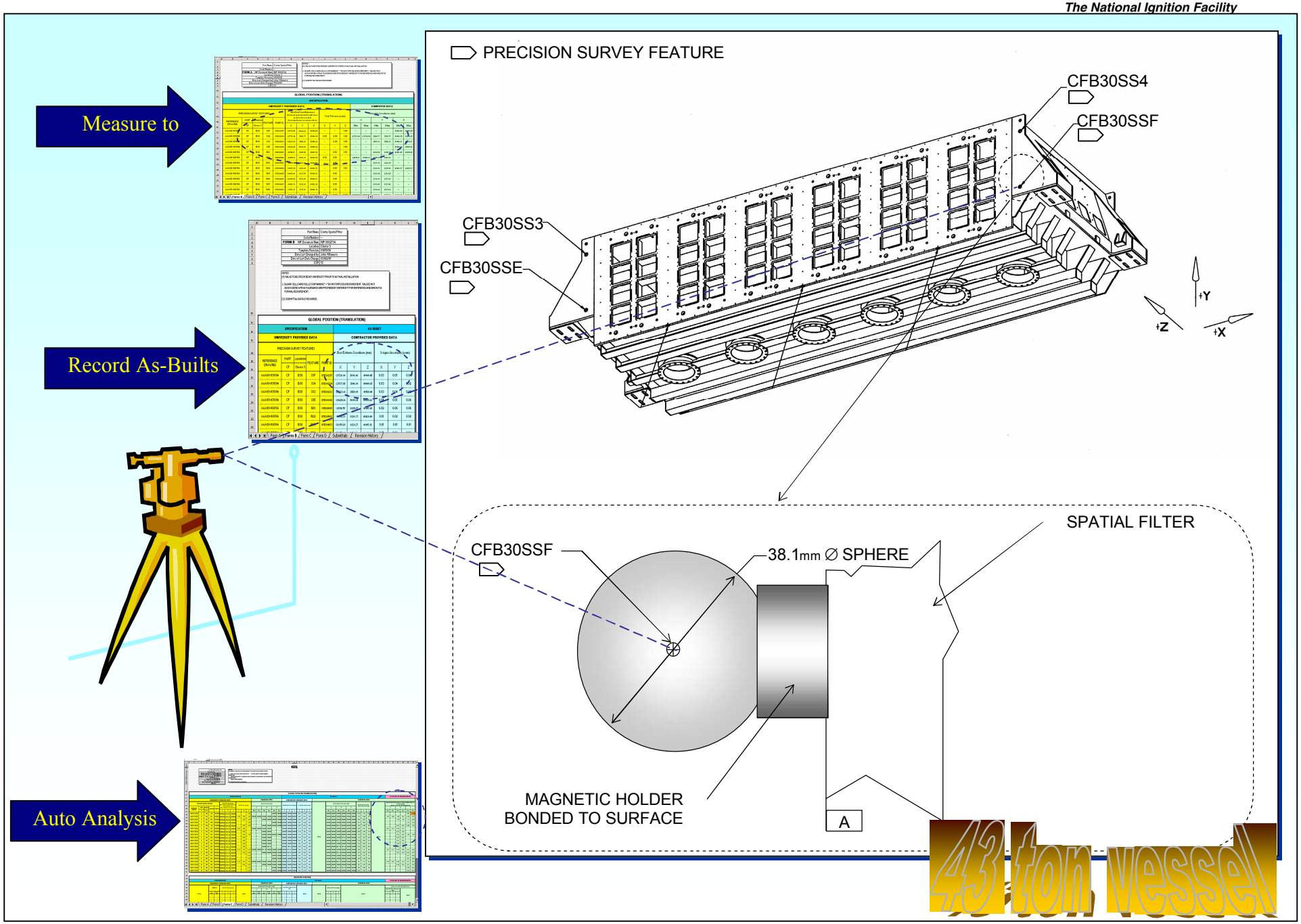

Closing Remarks

The National Ignition Facility

Questions?

The National Ignition Facility

Thank you for your attention . . .