UCRL-CONF-232200

LAWRENCE
LIVERMORE
NATIONAL
LABORATORY

Fiber Laser Front Ends for High Energy, Short Pulse Lasers

J. Dawson, M. Messerly, H. Phan, C. Siders, R. Beach, C. Barty

June 27, 2007

LEOS Conference
Lake Buena Vista, FL, United States
October 21, 2007 through October 25, 2007

Disclaimer

This document was prepared as an account of work sponsored by an agency of the United States Government. Neither the United States Government nor the University of California nor any of their employees, makes any warranty, express or implied, or assumes any legal liability or responsibility for the accuracy, completeness, or usefulness of any information, apparatus, product, or process disclosed, or represents that its use would not infringe privately owned rights. Reference herein to any specific commercial product, process, or service by trade name, trademark, manufacturer, or otherwise, does not necessarily constitute or imply its endorsement, recommendation, or favoring by the United States Government or the University of California. The views and opinions of authors expressed herein do not necessarily state or reflect those of the United States Government or the University of California, and shall not be used for advertising or product endorsement purposes.

Fiber Laser Front Ends for High Energy, Short Pulse Lasers

Jay W. Dawson, Michael J. Messerly, Henry Phan, Craig W. Siders, Raymond J. Beach and C.P.J. Barty
Photon Science & Applications Program, National Ignition Facility, Lawrence Livermore National Laboratory, 7000 East Avenue, Livermore, CA 94550
Tel: 925-422-1617, FAX: 925-423-6195, e-mail: dawson17@llnl.gov
Work performed under the auspices of the U.S. Department of Energy by the University of California, Lawrence Livermore National Laboratory under Contract No. W-7405-ENG-48.

Abstract: We are developing a fiber laser system for short pulse (1-10ps), high energy (~1kJ) glass laser systems. Fiber lasers are ideal for these systems as they are highly reliable and enable long term stable operation.

Nd: Glass lasers such as Lawrence Livermore National Laboratory's National Ignition Facility (NIF), the University of Rochester's Omega EP Laser and France's MegaJoule laser are capable of producing laser beams with multiple kilojoules of laser energy in a pulse from a single beam line [1]. Typically these lasers are run in a "long-pulse" mode with pulses on the order of 1-10ns creating peak powers on the order of 10^{12}W. However, it is also possible to run these lasers in a chirped pulse amplification (CPA) mode [2] and generate high energy (~500J) short pulses (~500fs) and create peak powers on the order of 10^{15}W. Peak powers of this magnitude permit the investigation of new physics phenomena in the relativistic optics realm enabling the laser-based production of x-rays for diagnostics and possibly new capabilities for inertial confinement fusion experiments such as fast ignition [3].

High energy Nd: Glass lasers are substantially different from typical table top ultra-short pulse lasers. The standard requirements one would consider such as spectral bandwidth, pulse temporal width, energy and repetition rate have relatively simple to meet specifications. The main laser has only 2.2nm of bandwidth at 1053nm, thus a seed system with 5nm of bandwidth is more than sufficient. The recompressed temporal pulse width of the system is thus 750fs. However, it is often desirable to be able to adjust the pulse width to longer lengths. This is because the typical laser of this sort is damage limited by the final optics and longer pulse widths allow the extraction of greater pulse energy. Since the optics at the output end of the laser are typically meter scale optics it is more convenient to adjust the pulse width in the front end laser system. For any seed laser higher energy is better, but for the case we have considered, 100μJ is sufficient seed pulse energy. High energy Nd: Glass lasers typically fire a shot at most once every 4 hours, so repetition rate of the seed laser can be chosen to be virtually any convenient number.

While the standard requirements are not very severe, other requirements, often not normally considered turn out to be quite difficult to achieve. These include having an extremely robust and reliable system. A single shot on a high energy system can have an operating cost of $10,000-$100,000. Thus it is critical the system run reliably 24/7 with little to no user adjustments. These systems can have kilo-Joule energies at the output. Pre-pulses of 10^{-6} in energy can still destroy the intended target prior to the arrival of the main pulse. Thus there is an ASE power specification of 10^{-8} relative to the peak pulse power of the system. This is a very high signal to noise ratio and a difficult requirement to achieve.

In order to achieve the reliability requirements we chose to construct a fiber laser front end system with a chirped fiber Bragg grating (CFBG) as the stretcher. A mini-compressor or tweaker is employed in the system to compensate for potential errors in the alignment of the main compressor and to permit adjustment of the pulse width on a shot to shot basis. The high pre-pulse contrast requirement leads to needing clean stretched seed pulses with energy in the several nJ range at the input to the amplifier chain. In order to achieve this given relatively high CFBG losses, we pre-amplify the compressed pulse and then clean the pulse prior to stretching. The full system block diagram is shown in figure 1 below. A fiber laser mode-locked oscillator [4] is phase locked to an external clock, pulses are selected by a fast AOM and then they propagate through a 40m PM fiber reaching 40ps in pulse width. They are then amplified to 200nJ, recompressed to their transform limit, cleaned in a pulse cleaner to 10^{-8} pulse contrast and then stretched to 2.5ns in the CFBG. The output pulses from the CFBG are about 1nJ. They are then amplified to a few nJ, split into two beam lines and coupled to a 120m long PM fiber for transport to main laser bay. 1nJ propagates through the transport fiber. A two stage fiber amplifier system boosts the energy from 1nJ to 100μJ and the light is then launched into the Nd: Glass laser amplifier system.

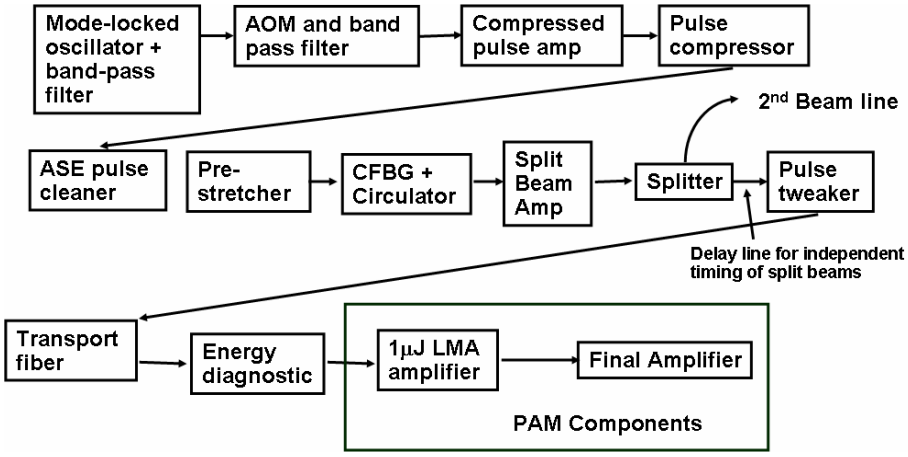

Figure 1: block diagram of fiber laser system.

A key challenge in getting good pulses from this system is the achievable quality of the CFBG and self phase modulation of the chirped pulse. The results of high resolution FROG analysis [5] of the recompressed output of just this system (less the transport fiber, tweaker and pulse cleaner) is shown in figure 2 below. The pulse energy was 43μJ, the calculated B integral was 3 and the FROG error was 0.00335, which was approximately 1.4X the achievable error given the size of the matrix employed.

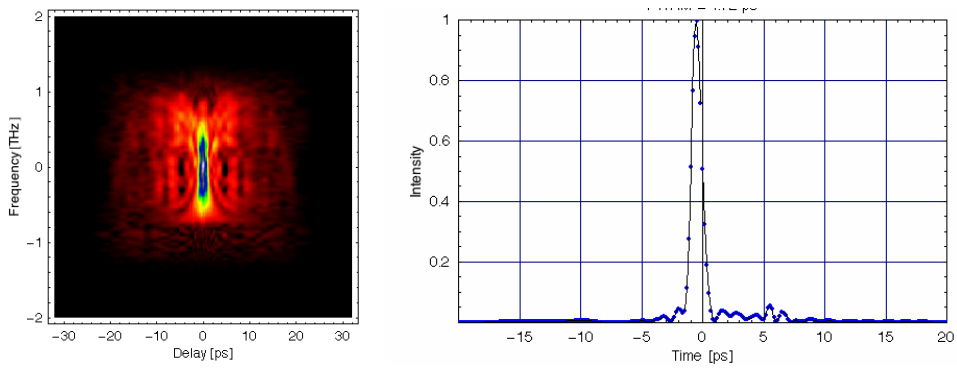

Figure 2 left hand side: FROG trace at output of the fiber laser front end system, right hand side: retrieved pulse.

Some pedestal is observable in the retrieved pulse, but it is not so bad as to prohibit using the pulse in an Nd: Glass laser system. It is expected the Nd: Glass laser system will gain narrow the pulse and thus remove some of the imperfections slightly improving the pulse quality. This system remains under development, but should be operating in its full form at full energy shortly. The full system will be able to produce 100μJ pulse with B<6 and an ASE contrast ratio of 10^{-8}.

1. Edward I. Moses, "The National Ignition Facility: A National Resource for Experimental High-Energy-Density and Inertial Confinement Fusion Science", SPIE Photonics West 2005, LASE Keynote Presentation
2. G.A. Mourou, C.P.J. Barty, M.D. Perry, "Ultrahigh intensity laser physics of the extreme on a tabletop," Physics Today, vol.51, no. 1, pp. 22 (1998)
3. C.P.J. Barty, et al, "An overview of LLNL high-energy short-pulse technology for advanced radiography of laser fusion experiments," Nuclear Fusion, vol.44, pp. S266-S275 (2004)
4. J. R. Buckley, F. W. Wise, F. O. Ilday, T. Sosnowski, "Femtosecond fiber lasers with pulse energies above 10 nJ," Opt Lett 30, 1888-1890 (2005).
5. R. Trebino, "Frequency-Resolved Optical Gating: The Measurement of Ultrashort Pulses," Kluwer Academic Publishers (2000), see in particular, Chapter 21 by Daniel J. Kane and Chapter 24 by Craig W. Siders and Antoinette J. Taylor

This work was performed under the auspices of the U. S. Department of Energy by University of California, Lawrence Livermore Laboratory under Contract W-7405-Eng-48.