LAWRENCE
LIVERMORE
NATIONAL
LABORATORY

LLNL-TR-414727

DHS Internship Paper

Jonathan Dreyer

July 15, 2009

Disclaimer

This document was prepared as an account of work sponsored by an agency of the United States government. Neither the United States government nor Lawrence Livermore National Security, LLC, nor any of their employees makes any warranty, expressed or implied, or assumes any legal liability or responsibility for the accuracy, completeness, or usefulness of any information, apparatus, product, or process disclosed, or represents that its use would not infringe privately owned rights. Reference herein to any specific commercial product, process, or service by trade name, trademark, manufacturer, or otherwise does not necessarily constitute or imply its endorsement, recommendation, or favoring by the United States government or Lawrence Livermore National Security, LLC. The views and opinions of authors expressed herein do not necessarily state or reflect those of the United States government or Lawrence Livermore National Security, LLC, and shall not be used for advertising or product endorsement purposes.

This work performed under the auspices of the U.S. Department of Energy by Lawrence Livermore National Laboratory under Contract DE-AC52-07NA27344.

Jonathan Dreyer
September 18, 2007
DHS Internship Paper

Discuss your achievements during the internship including contributions to publications, presentations, and accomplishment of project milestones.

During my internship at Lawrence Livermore National Laboratory I worked with microcalorimeter gamma-ray and fast-neutron detectors based on superconducting Transition Edge Sensors (TESs). These instruments are being developed for fundamental science and nuclear non-proliferation applications because of their extremely high energy resolution; however, this comes at the expense of a small pixel size and slow decay times. The small pixel sizes are being addressed by developing detector arrays while the low count rate is being addressed by developing Digital Signal Processors (DSPs) that allow higher throughput than traditional pulse processing algorithms. Traditionally, low-temperature microcalorimeter pulses have been processed off-line with optimum filtering routines based on the measured spectral characteristics of the signal and the noise. These optimum filters rely on the spectral content of the signal being identical for all events, and therefore require capturing the entire pulse signal without pile-up. In contrast, the DSP algorithm being developed is based on differences in signal levels before and after a trigger event, and therefore does not require the waveform to fully decay, or even the signal level to be close to the base line. The readout system allows for real time data acquisition and analysis at count rates exceeding 100 Hz for pulses with several ~ms decay times with minimal loss of energy resolution. Originally developed for gamma-ray analysis with HPGe detectors we have modified the hardware and firmware of the system to accommodate the slower TES signals and optimized the parameters of the filtering algorithm to maximize either resolution or throughput. The following presents an overview of the digital

signal processing hardware and discusses the results of characterization measurements made to determine the systems performance.

SYSTEM DESCRIPTION

The DGF Pixie-16 is a scalable 16-channel data acquisition system based on the PCI standard used for nuclear physics and other applications requiring many channels. Originally developed as a digital spectrometer for gamma-ray analysis with high-purity Ge (HPGe) detectors, this system is now being adapted for use with superconducting microcalorimeters.

The output signal from each microcalorimeter pixel is read out with a separate channel of the Pixie-16 system. The incoming signal is first adapted for the analog-to-digital converter (ADC) with an analog signal conditioning unit that includes input termination and overvoltage protection circuitry, a user-defined offset adjustment, fixed gain, and a Nyquist filter. Since microcalorimeter pulses have time constants three orders of magnitude greater than HPGe, the ADC's Nyquist filter bandwidth was reduced to remove noise contributions from high frequencies. The signal is digitized using a 12 bit, 100 MHz ADC and read into the digital processing core of the system, which has three major components: i) four field-programmable gate arrays (FPGA) for filtering, ii) a digital signal processor (DSP) for pulse height measurements, and iii) a system interface FPGA (Fig. 1).

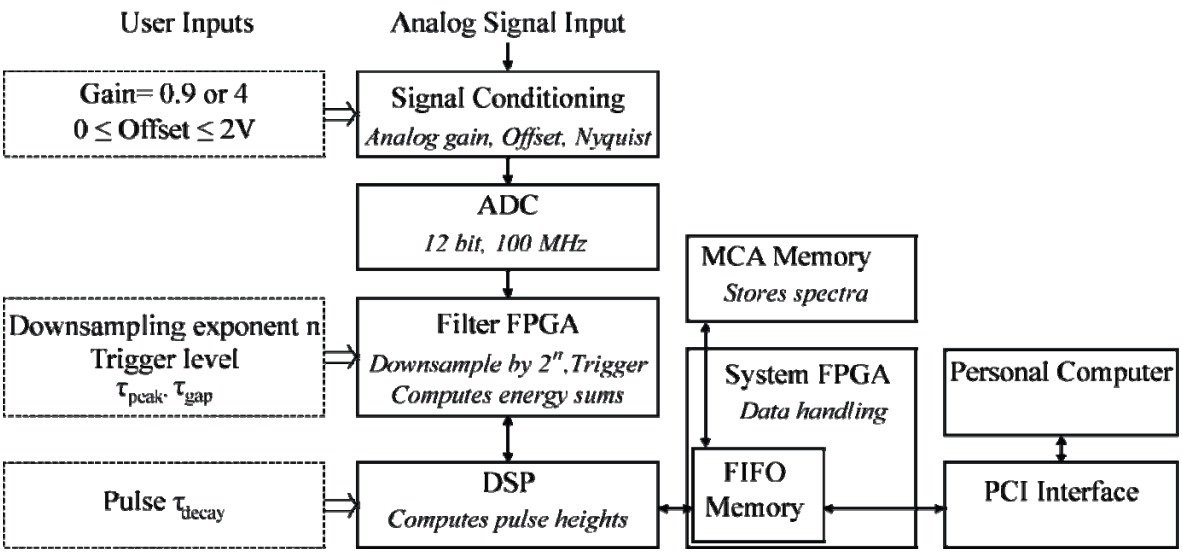

Fig. 1. Block diagram of the Pixie-16 system.

2.1. Filter FPGA

Digital data streams from four analog inputs are continuously processed by a single filter FPGA. For each channel of digitized data the FPGA continuously computes three energy sums (Σ_1, Σ_2 and Σ_3) over three user-defined time intervals τ_{peak}, τ_{gap}, and τ_{peak} (Fig 2a). These boxcar sums provide the filtering, and for a step function input, they lead to a trapezoidal output with a peaking time τ_{peak} and a plateau of width τ_{gap}. The FPGA also computes two separate energy sums over intervals $\tau_{peak,filter}$ and provides a trigger signal whenever their difference exceeds a user-defined threshold.

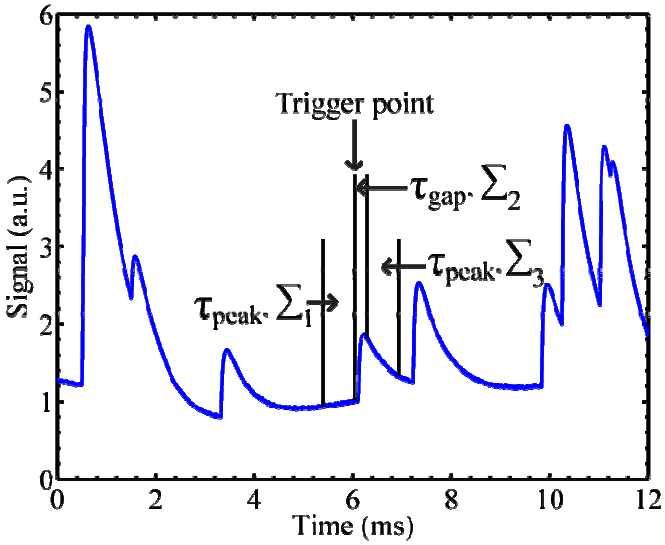

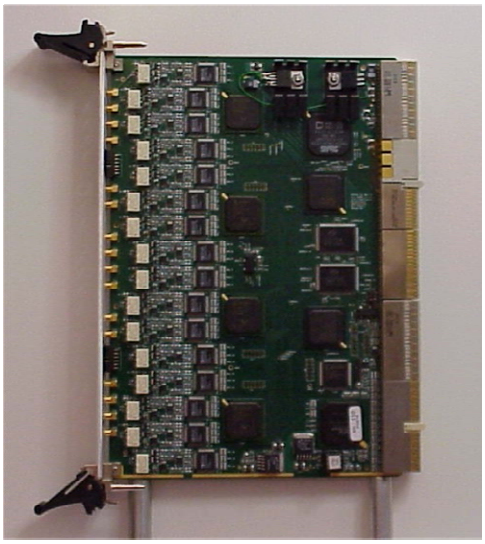

Fig. 2a (left): Typical gamma-ray microcalorimeter signal at high count rate and associated filter time constants. 2b (right): 16-Channel DSP Board (Pixie-16).

To calculate the energy sums for microcalorimeter pulses with ~ms decay constants, the range of the filter time constants was increased by modifying the Filter FPGA firmware and average up to 2^8 samples of the digital data stream from the ADC. This can reduce the effective sampling interval from 10 ns to 2.56 μs, and increase the range of trapezoidal filter time constants up to 5 ms. Occasionally, the FPGA measures the baseline level <BL> between to monitor DC offsets and drifts. In addition, the FPGA performs pileup inspection and rejects pulses whose filter sums overlap. If desired, the FPGA can use on-chip FIFO memory to capture waveforms of up to 10 ms (4000 samples) for offline analysis. When the trigger filter exceeds the threshold and the pulses a sufficiently spaced, a trigger signal is issued and the FPGA latches the energy sums to the data stream and issues an interrupt to the DSP.

2.2. *Digital Signal Processor*

Upon receiving the interrupt from the filter FPGA the DSP reads the energy sums and average baseline and computes the energy E as

$$E = c_3 \cdot \sum_3 - c_1 \cdot \sum_1 + c_2 \cdot \sum_2 - < BL > . \qquad (3)$$

Here the coefficients c_i use the definable pulse decay time constant τ_{pulse} to correct for both the decay of the measured pulse during τ_{gap} and any underlying decay from a previous pulse during τ_{peak}. When the system is not performing pulse height analysis, it periodically queries the FPGA for baseline measurements used for offset and drift corrections. In addition, the DSP applies time stamps, prepares data for output to the host computer, and sends the final pulse height values to the System FPGA for MCA histogramming. If desired, waveforms from the Filter FPGA's FIFOs can be read into DSP memory, and analyzed to compute rise times and other parameters to optimize system performance.

2.3. System FPGA

During a data acquisition run, the system FPGA receives pulse height values computed by the DSP for each event. The FPGA performs a read/ increment/ write operation on the MCA memory to build an onboard energy spectrum. The System FPGA responds to commands from the host computer to transfer the MCA memory through the PCI interface for analysis.

2. SYSTEM PERFORMACE

The pulse processing algorithms are optimized for a given detector response by adjusting τ_{pulse} and τ_{gap}. The value of τ_{pulse} is used to compensate for the underlying decay of a pulse. This is particularly important for count rates above 100 Hz where pulses overlap frequently. Secondly, the gap time τ_{gap} must cover the entire rising part of the pulse. Microcalorimeters with a rising signal edge of the form 1- exp(-t/τ_{rise}) typically require $\tau_{gap} \geq 5\ \tau_{rise}$. Then, τ_{peak}, can be optimized to find the best tradeoff between energy resolution and throughput (figure 3a). The

dead time τ_{dead} of the filter is approximately $\tau_{dead} = 2(\tau_{gap}+\tau_{peak})$, and for random Poisson-distributed pulses the output count rate (OCR) at a given input count rate (ICR) is [7]

$$\mathrm{OCR} = \mathrm{ICR} \cdot \exp(-\mathrm{ICR} \cdot \tau_{dead}) \,. \qquad (4)$$

This gives a maximum $\mathrm{OCR}_{max} = (e \cdot \tau_{dead})^{-1}$ at an input count rate of $\mathrm{ICR}_{max} = 0.5(\tau_{gap}+\tau_{peak})^{-1}$. The optimum τ_{peak} for highest energy resolution is determined by the noise characteristics of the setup, and the throughput is inversely proportional to this value.

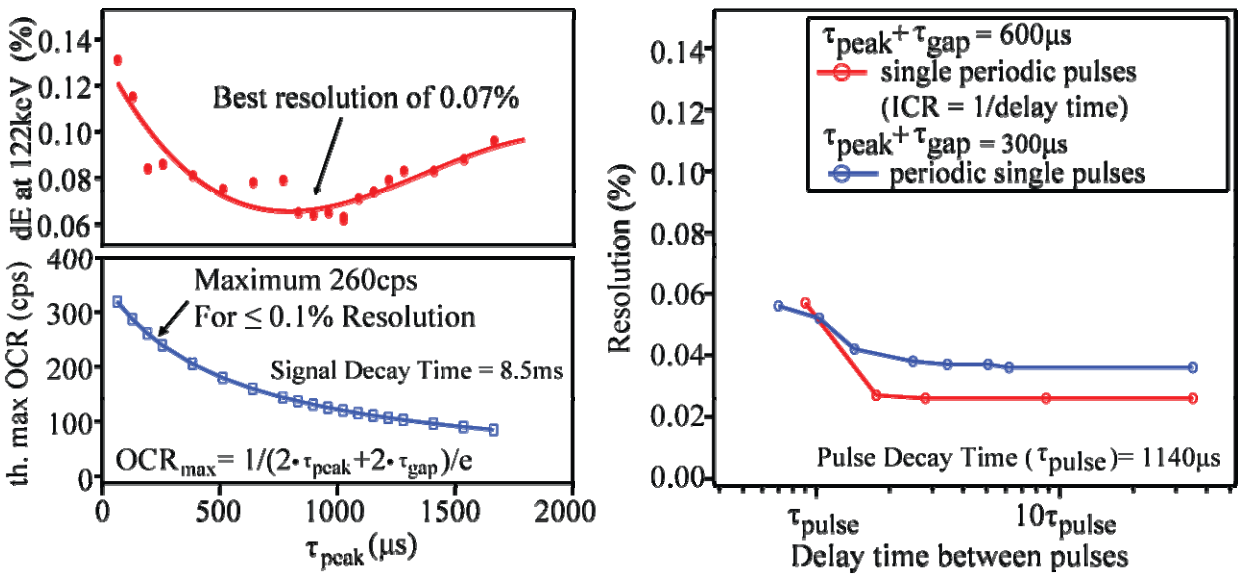

Fig 3a (left). Trade-off between energy resolution and count rate. For pulses with a decay time τ_{pulse} = 3 ms, the best resolution of 85eV FWHM at 122 keV is obtained for τ_{peak} = 1 ms. A resolution of 120 eV FWHM can be obtained at theoretical maximum rates up to 260 counts/s for τ_{peak} = 0.2 ms. Fig 3b (right). Pulses can be analyzed despite line overlap, although the resolution degrades when the time interval between pulses is shorter than the pulse decay time τ_{pulse}.

To characterize the performance of the Pixie-16 system, Gamma-waveforms from a ^{57}Co source that had produced an energy resolution of 75 eV FWHM by optimum filtering [2] were re-analyzed with the DSP algorithm. We found for these pulses with τ_{pulse} = 3 ms, the optimum resolution of 85 eV FWHM at 122 keV is obtained for τ_{peak} = 1 ms; The maximum output count

rate at this setting was ~100 Hz, an order of magnitude above the maximum rate o the optimum filter. Decreasing the peaking time to $\tau_{peak} = 0.2$ ms would allow count rates up to 260 counts/s while maintaining a resolution below 0.1% FWHM (Fig 3a). To characterize the response of the system to pileup we used a series of idealized electronic pulses with systematically varying delay times. We found that the resolution remains at the highest level despite a delay time comparable to the pulse decay time. It remains below 0.1% even for significant pileup where $\tau_{delay} = 0.8\tau_{pulse}$ (Fig. 3b). The resolution remains below 0.2% for count rates exceeding several hundred counts per second (Fig. 4). Decreasing τ_{peak} allows for operation at higher count rates, although at the cost of lower energy resolution. For many applications in nuclear security, this is a very desirable trade-off [8].

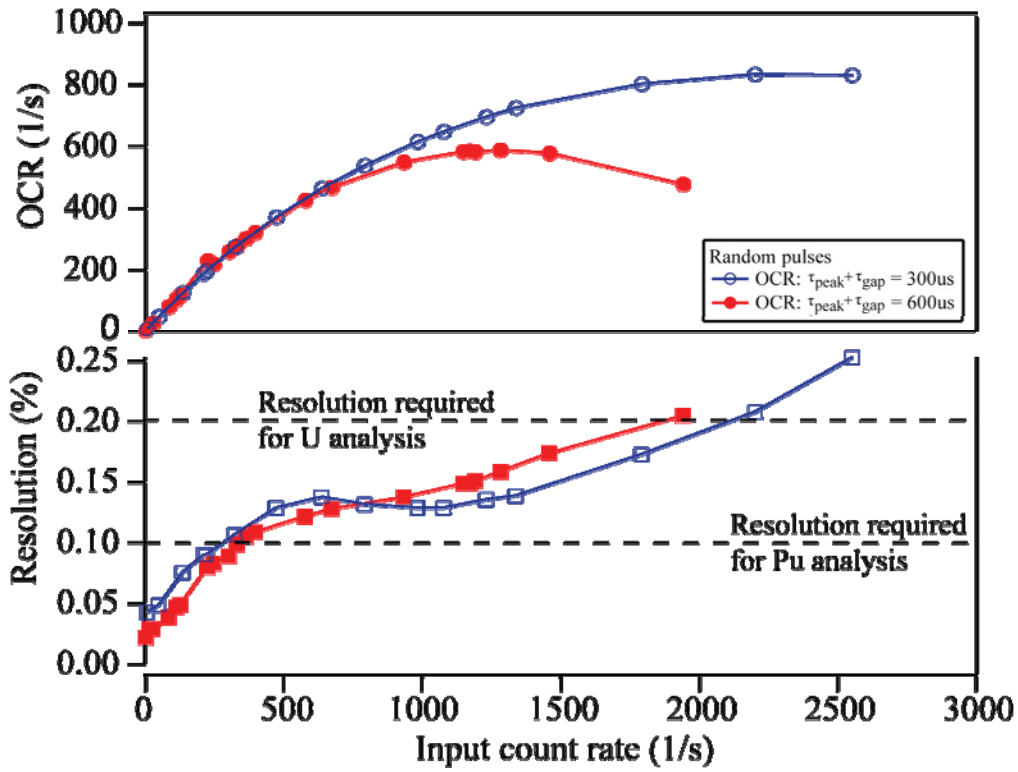

Fig. 4.: Shorter peaking times allow higher throughput (left), although generally at the cost of lower energy resolution (right). The DSP resolution decreases with increasing input count rate, but still stays below the value required for certain national security applications such as Pu and U isotope analysis.

3. DSP MICROCALORIMETER ANALYSIS

Pulses produced by a thermal neutrons incident on a TES with a TiB_2 absorber were used to directly compare the performance of Pixie-16 pulse processing algorithm and the optimum filter. Under certain circumstances (Fig. 5), we have observed an even better energy resolution with the DSP system then with the nominally optimum filter, possibly because the DSP system is less susceptible to small variations in the signal shape and pick-up. This suggests that DSP readout can provide an energy resolution comparable to the optimum filtering routines commonly used for microcalorimeter pulse analysis, while at the same time improving the count rate capabilities and thus the spectrometer sensitivity by an order of magnitude. Future improvements of the algorithms will address the degradation of energy resolution with count rate and non-ideal effects such as drifts and flux jumps upon cosmic particle absorption.

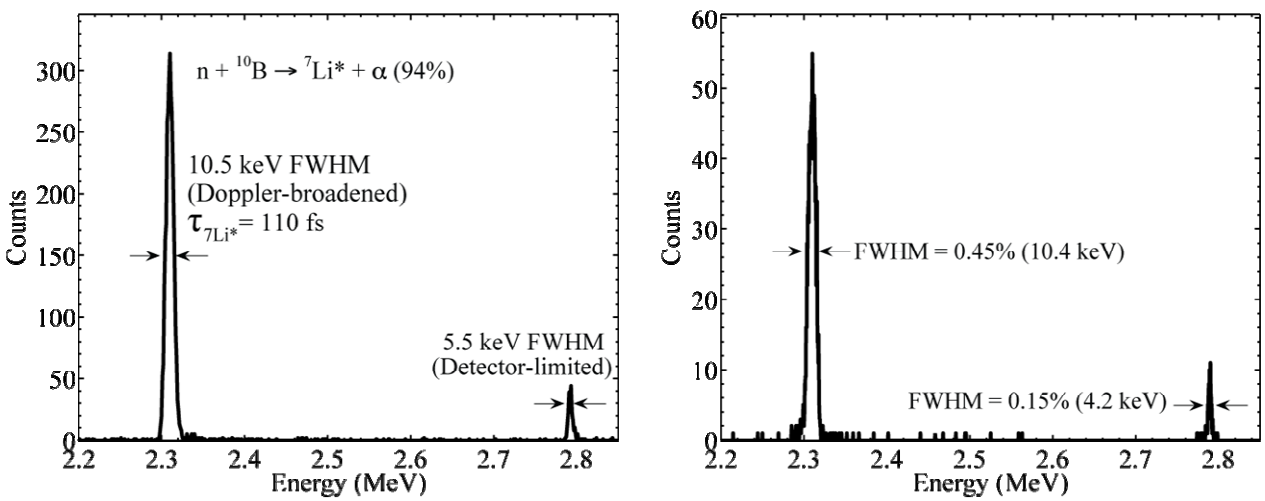

Fig. 5. Thermal neutron spectra of a TES with a TiB_2 absorber using an optimum filtering routine (left) and using the Pixie-16 algorithm (right). The 2.31 MeV line is Doppler-broadened by the decay of the ^{7}Li* nucleus during thermalization.

Discuss how the internship experience impacted your academic and/or career planning. Include a description of lectures/activities sponsored by the hosting facility that were of benefit to your personal and professional development.

Throughout the summer Lawrence Livermore National Laboratory offered a wide range of seminars. The seminars and work-in-progress talks were very informative, in particular I found

the seminars discussing the improvements in hand-held germanium detectors, nuclear power plant monitoring with anti-neutrino detectors, and developments in scintillation materials very interesting. The numerous discussions and presentations also provided an excellent opportunity to discuss with staff scientists possible research and career opportunities available in the national laboratories.

Discuss any ideas you may have of areas of research that should be considered to help the Department of Homeland Security accomplish its mission and goals.

From the perspective of instrument development, research directed towards improving the sensitivity and energy resolution of current and emerging systems is crucial to detect the presence of nuclear activities, to verify the peaceful nature of declared nuclear activities and to respond to emerging threats to national security. Larger detectors, such as cost effective scintillators, offer improved sensitivity useful for locating illicit materials, unattended or active monitoring, and networks of detector system. Improvements in energy resolution are required to further increase precision analysis, making them more widely applicable in nuclear analysis and fundamental science applications; in particular for the detection of more minute deviations in the nuclear composition, characteristic of illicit nuclear activities, and enable the analysis of more dilute environmental nuclear samples with high precision. Research in detector development will enhance our nation's capability to assess and characterize nuclear and radiological threats, and improve our nation's ability to counter the threat posed by radiological and nuclear terrorism.