LAWRENCE
LIVERMORE
NATIONAL
LABORATORY

LLNL-TR-427769

Electron Positron Proton Spectrometer for use at Laboratory for Laser Energetics

S. L. Ayers

April 13, 2010

Disclaimer

This document was prepared as an account of work sponsored by an agency of the United States government. Neither the United States government nor Lawrence Livermore National Security, LLC, nor any of their employees makes any warranty, expressed or implied, or assumes any legal liability or responsibility for the accuracy, completeness, or usefulness of any information, apparatus, product, or process disclosed, or represents that its use would not infringe privately owned rights. Reference herein to any specific commercial product, process, or service by trade name, trademark, manufacturer, or otherwise does not necessarily constitute or imply its endorsement, recommendation, or favoring by the United States government or Lawrence Livermore National Security, LLC. The views and opinions of authors expressed herein do not necessarily state or reflect those of the United States government or Lawrence Livermore National Security, LLC, and shall not be used for advertising or product endorsement purposes.

This work performed under the auspices of the U.S. Department of Energy by Lawrence Livermore National Laboratory under Contract DE-AC52-07NA27344.

Engineering Directorate Safety Note

Electron Positron Proton Spectrometer
for use at LLE
EDSN10-000004-AA

Prepared by: _____ Date: _____
Shannon Ayers
Mechanical Engineer
Applied Physics Division

Reviewed by: _____ Date: _____
Robert Murray
Civil Engineer
Laser Systems Engineering and Operations Division

Reviewed by: _____ Date: _____
Allen House
Responsible Individual
National Security Engineering Division

Approved by: _____ Date: _____
Joel Bowers
Division Leader
Technology Resource Engineering Division

Distribution:

Allen Elsholz	(L-340)	Bob Heeter	(L-472)
Allen House	(L-168)	LSEO Office	(L-447)
Joel Bowers	(L-113)	Riccardo Tommasini	(L-399)
Scott Winters	(L-447)		
Bob Murray	(L-113)		

Document Approval and ECMS Proxy Authorization

Your signature acknowledges that you have read and approved the contents of **EDSN10-000004-AA**, **Electron Positron Proton Spectrometer for use at LLE.** Furthermore, your signature authorizes Tonya Dye of the Laser Systems Engineering and Operations Division of the Engineering Directorate as your proxy for ECMS record approval of this document. If proxy is not authorized, you must approve this document electronically in ECMS.

Table of Contents

Section A – Scope and Equipment (or System) Description 3
Section B – Operational Hazards 4
Section C – Operational Procedure 4
Section D – Design Calculations.....4
Section E - Testing Requirements.....8
Section F – Labeling Requirements 8
Section G – Associated Procedures 8
Section H – References 8
Appendix A – Calculations 9
Appendix B – Counter Weight.....33
Appendix C –EPPS Drawings.....36

Section A – Scope and Equipment (or System) Description

The Electron Positron Proton Spectrometer (EPPS) is mounted in a TIM (Ten-Inch Manipulator) system on the Omega-60 or Omega-EP laser facilities at the University of Rochester, Laboratory for Laser Energetics (LLE), when in use, see Fig. 1. The Spectrometer assembly, shown in Fig. 2, is constructed of a steel box containing magnets, surrounded by Lead 6% Antimony shielding with SS threaded insert, sitting on an Aluminum 6061-T6 plate.

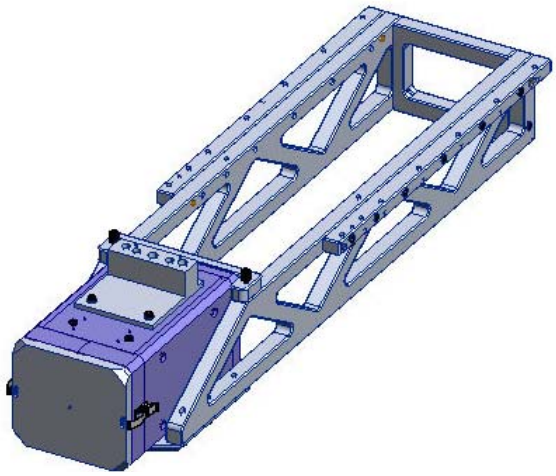

Fig. 1. The EPPS with TIM interface

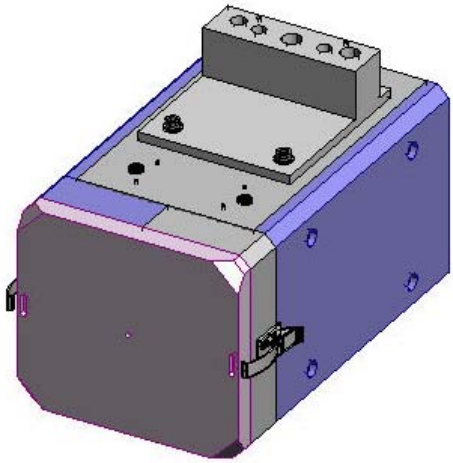

Fig. 2. The EPPS assembly

To meet LLE TIM moment loading requirements, a counter-weight is added when the diagnostic is mounted in the TIM, see Fig. 3. For moving the diagnostic a two person lifting handle is used, see Fig. 4.

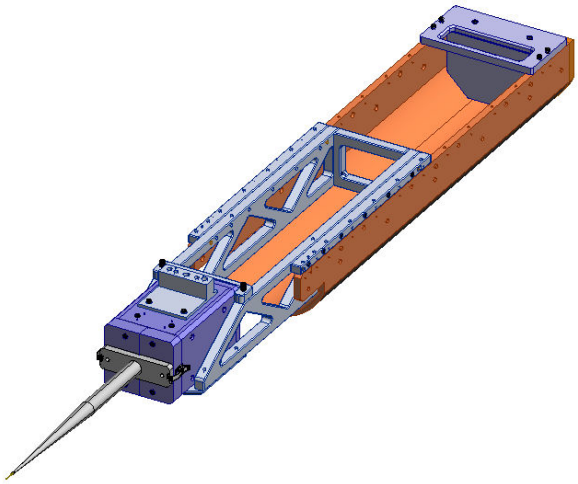

Fig. 3. The EPPS with counter weight and pointer, mount in TIM Boat

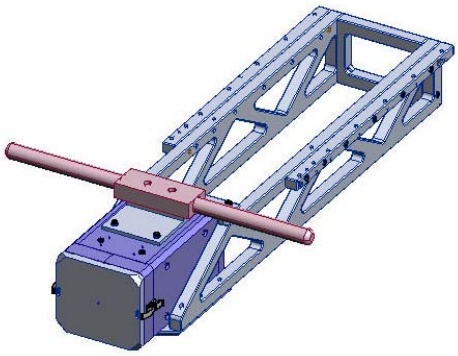

Fig. 4. The EPPS with TIM interface and lifting handle

Section B – Operational Hazards

Failure of the EPPS device or device mechanical support components could cause injury to personnel, damage to equipment, and may have significant impact on programmatic schedule and cost.

There are no electrical hazards in the EPPS device.

Section C – Operational Procedure

Use of the EPPS at LLE is governed by LLE procedure D-TX-P-016.

Section D – Design Calculations

The analyses of the EPPS as compiled in this safety note can be split up into the following subsystems: The TIM Interface, the EPPS and TIM Mounting Interface, and the EPP Spectrometer Assembly.

Each of these subsystems contains numerous load path elements as enumerated in Fig. 5 and Table 1.

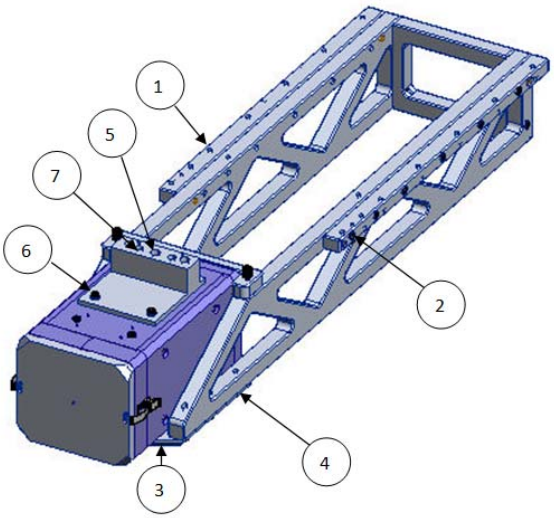

Fig. 5a. EPPS Load Path elements.

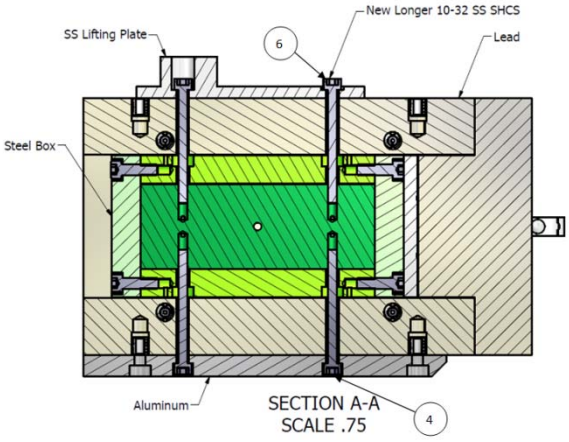

Fig. 5b. EPPS Load Path elements, sectioned side view of spectrometer.

Table 1: Load path elements.

1	TIM Mounting Rail (Left mounting rail, TIM mounting) to TIM Boat	Fourteen 10-32 SS fasteners	App. A
2	TIM Mounting Rail to TIM Mounting Frame (Arm, TIM mounting)	Twelve 10-32 SS fasteners	App. A
3	TIM Mounting Frame (Arm, TIM mounting) to Support Plate (Support plate – TIM mounting)	Six 10-32 SS fasteners	App. A
4	Support Plate (Support plate – TIM mounting) to Side Plate	Four 10-32 SS fasteners	App. A
5	Hoist Ring to Lifting Bracket	One ½”-13 fastener	App. A
6	Lifting Bracket to Side Plate	Four 10-32 SS fasteners	App. A
7	Lifting Handle to Lifting Bracket	Two 3/8”-16 SS fasteners	App. A

The TIM boat structure is outside of the scope of this safety note. This safety note includes everything from the mounting to the TIM boat to the spectrometer.

The following table lists the factors of safety for each load path item:

Table 2: Factors of safety for the EPPS.

Configurations	Stress (ksi)	Yield Stress (ksi)	Ultimate Stress (ksi)	Safety Factor (yield)	Safety Factor (Ult)	Required Safety Factor*
1.1 TIM Rail/ TIM Boat Bolt Stress, von Mises	1.16	30.0		25.9		3 SY
1.2 TIM Rail/ TIM Boat Tapped Holes, Shear	5.01	20.2		4.0		3 SY
1.1a TIM Rail/ TIM Boat Bolt Stress, von Mises	1.41	30.0		21.3		1 SSY
2.1 TIM Frame/ TIM Rail Bolt Stress, von Mises	2.29	30.0		13.1		3 SY
2.2 TIM Frame/ TIM Rail Tapped Holes, Shear	3.56	20.2		5.7		3 SY
2.1a TIM Frame/ TIM Rail Bolt Stress, von Mises	3.07	30.0		9.8		1 SSY
3.1 TIM Frame/ Support Plate Bolt Stress, von Mises	0.72	30.0		41.9		3 SY
3.2 TIM Frame/ Support Plate Tapped Holes, Shear	2.86	20.2		7.1		3 SY

Configurations	Stress (ksi)	Yield Stress (ksi)	Ultimate Stress (ksi)	Safety Factor (yield)	Safety Factor (Ult)	Required Safety Factor*
3.1a TIM Frame/ Support Plate Bolt Stress, von Mises	1.60	30.0		18.7		1 SSY
4.2 TIM Plate/ Side Plate Tapped Holes, Shear	5.71	20.8		3.6		3 SY
4.1a TIM Plate/ Side Plate Bolt Stress, von Mises	1.33	30.0		22.5		1 SSY
5.1 Hoist Ring/ Lifting Bracket Tapped Holes, Shear	4.21	20.2		4.1		6 SY
5.1 Hoist Ring/ Lifting Bracket Tapped Holes, Shear	4.21		43.3		10.3	8 SU
6.1 Lifting Bracket/ Side Plate Bolt Stress, von Mises	1.07	30.0		27.9		3 SY
6.2 Lifting Bracket/ Side Plate Tapped Holes, Shear	5.71	20.8		3.6		3 SY
7.1 Lifting Handle/ Lifting Plate Bolt Stress, von Mises	7.39	30.0		4.1		3 SY
7.2 Lifting Handle/ Lifting Plate Tapped Holes, Shear	4.50	17.3		3.8		3 SY

* SY=Static Yield, SU=Static Ultimate, SSY=Static+Seismic Yield, SSU=Static+Seismic Ultimate

1) The mounting rails are connected to the TIM boat (the TIM boat is LLE equipment) using 14 10-32 stainless steel fasteners and helicoil inserts. The fasteners will be analyzed under both static and seismic loading conditions. The two horizontal and one vertical seismic forces will be assumed to occur simultaneously, acting through the center of gravity of the equipment, and will be combined to calculate seismic response values. Conservatively, only two of the fasteners will be used in the calculations. No information is known about the inserts in the TIM Boat, therefore the thread shear will be calculated based on a 10-32 thread directly into aluminum (building additional conservatism into the calculations).

2) The mounting rails are connected to the TIM mounting frame using 12 10-32 stainless steel fasteners and helicoil inserts. The fasteners will be analyzed under both static and seismic loading conditions. The two horizontal and one vertical seismic forces will be assumed to occur simultaneously, acting through the center of gravity of the equipment, and will be combined to calculate seismic response values. Conservatively, only two of the fasteners will be used in the calculations.

3) The EPPS assembly is mounted to the Support plate, which is connected to the TIM mounting frame, using six 10-32 fasteners. The fasteners are assembled through the TIM mounting plate and threaded into the TIM mounting frame. The two horizontal and one vertical seismic forces will be assumed to occur simultaneously, acting through the center of gravity of the equipment, and will be combined to calculate seismic response values. Conservatively, only two fasteners are used for tension calculations.

4) The EPPS is secured to the aluminum Support plate, using four 10-32 fasteners. The fasteners are assembled through the support plate, through the lead shield and threaded into the steel side plate. The two horizontal and one vertical seismic forces will be assumed to occur simultaneously, acting through the center of gravity of the equipment, and will be combined to calculate seismic response values.

5) The EPP Spectrometer assembly is lifted by a single hoist ring threaded into a 304SS lifting bracket.

6) The lifting bracket is mounted to the EPPS, using four 10-32 fasteners. The fasteners are assembled through lifting bracket, through the lead shield and threaded into the steel side plate. The two horizontal and one vertical seismic forces will be assumed to occur simultaneously, acting through the center of gravity of the equipment, and will be combined to calculate seismic response values. Conservatively, only two fasteners are used for tension calculations.

7) The EPP Spectrometer assembly is lifted by two people, using an aluminum handle. The handle is mounted to the stainless steel lifting bracket using two 3/8”-16 fasteners.

The following table lists the torque value for each fastener:

Table 3: Torque values for the EPPS.

Item #	Screw Size	Minimum Length of Thread Engagement	Female Threads	Recommended Torque (in-lbf)
1	10-32	0.29”	Al 6061-T6 w/ SS Helicoil Inserts	13.5
2	10-32	0.29”	Al 6061-T6 w/ SS Helicoil Inserts	13.5
3	10-32	0.29”	Al 6061-T6	13.5
4	10-32	0.29”	A36 Steel	13.5
6	10-32	0.29”	A36 Steel	13.5
7	3/8-16	0.625”	304 SS	103.5

Section E - Testing Requirements

No Testing Requirements.

Section F – Labeling Requirements

The equipment needs to be labeled per the requirement in LLE Seismic Criteria NIF-0116027-AC, with the EDSN number “EDSN10-000004”. If labeling is not possible, the equipment must be bagged and tagged with the EDSN number “EDSN10-000004”.

The equipment needs to be labeled per the requirement in LLE Seismic Criteria NIF-0116027-AC, “For Use at LLE Only”. If labeling is not possible, the equipment must be bagged and tagged with the message “For Use at LLE Only”.

Section G – Associated Procedures

None

Section H – References

1. *Engineering Design Safety Standards Manual*, M-102, Lawrence Livermore National Laboratory, 2009.

2. *Recommended Seismic Criteria for LLNL Equipment Located at LLE*, NIF 0116027-AC, 12/18/2009

Appendix A – Calculations

System Weight & CG:

$W_{spect} := 85lbf$ — Weight of Spectrometer Assembly (Obtained from M. Saculla CAD Model 3/31/10)

$CG_{spect} := 8.727in$ — from the Tooling Balls. CG = 38.125" from the last set of rollers on TIM (Obtained from M. Saculla CAD Model 3/31/10)

Material Properties:

$\sigma_{y\_Al6061T6} := 35000psi$ — Yield strength of Aluminum 6060-T6

$\sigma_{y\_SS\_bolt} := 30000psi$ — Yield strength of SS bolt

$\sigma_{u\_SS\_bolt} := 80000psi$ — Ultimate strength of SS bolt

$\sigma_{y\_LeadAnt} := 4100psi$ — Yield strength of Lead-6% Antimony

$\sigma_{y\_HevMet} := 90000psi$ — Yield strength of Heavy Metal, 17.5 gm/cc from Rembar

$\sigma_{y\_304SS} := 30000psi$ — Yield strength of 304 Stainless Steel

$\sigma_{u\_304SS} := 75000psi$ — Ultimate strength of 304 Stainless Steel

$\sigma_{y\_A36} := 36000psi$ — Ultimate strength of A36 Steel

Seismic:

$Z := 0.15$ $\quad I := 1.0$

$C_p := 2$ — Elevated equipment

$SD_h := Z \cdot I \cdot C_p = 0.3$ — Horizontal Seismic Demand

$SD_v := \left(\frac{2}{3}\right) Z \cdot I \cdot C_p = 0.2$ — Vertical Seismic Demand

$SD_x := SD_h = 0.3$ $\quad SD_y := SD_v = 0.2$ $\quad SD_z := SD_h = 0.3$

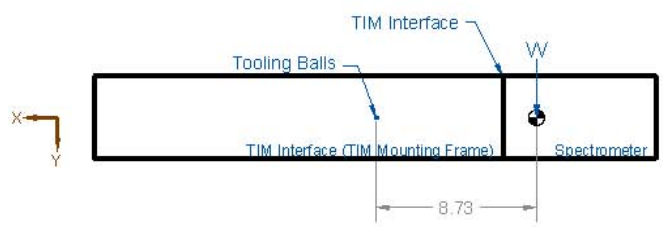

Axis used for seismic calculations

1. TIM Mounting Rail (Left mounting rail - TIM mounting) to TIM Boat

Given:

$W_1 := W_{spect} = 85 \cdot lbf$ — Dead weight of Spectrometer Assembly

$CG_1 := CG_{spect} - 0.625in = 8.102 \cdot in$ — CG of Spectrometer Assembly

$d_{1c} := 15in$ — Distance between fasteners (x-direction)

$d_{1e} := (5.170 + .75 + .75 + .54 + .54)in = 7.75 \cdot in$ — Distance between fasteners (z-direction)

$n_{t1} := 2$ — Number of fasteners used for tension only

$n_{tot1} := 14$ — Total number of fasteners

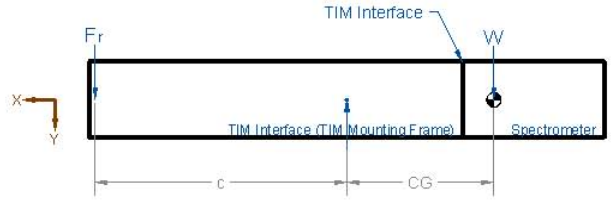

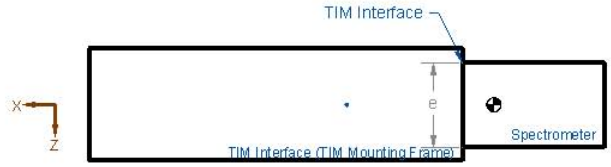

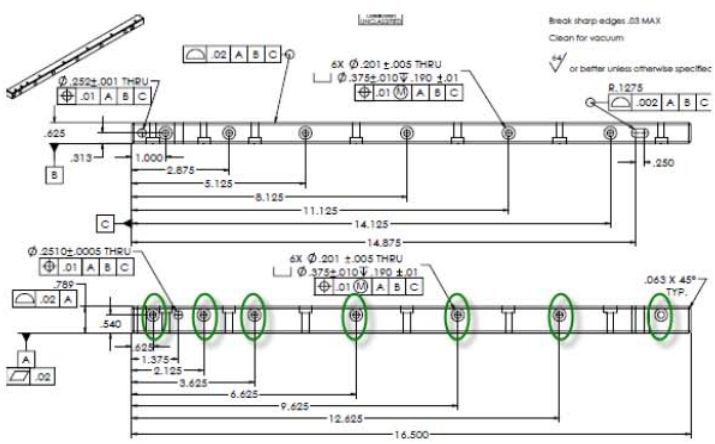

1.1 10-32 Fasteners:

$D_{n1} := 0.19in$ — Nominal diameter of 10-32

$TPI_1 := \frac{32}{in}$

$D_{m1} := D_{n1} - \frac{1}{TPI_1} = 0.159 \cdot in$ — Mean diameter of fastener

$A_{m1} := \frac{\pi \cdot (D_{m1})^2}{4} = 0.02 \cdot in^2$ — Area of fastener

$T_1 := \frac{W_1 \cdot CG_1}{d_{1c} \cdot n_{t1}} = 22.956 \cdot lbf$ — Tensile force acting on fastener

$\sigma_1 := \frac{T_1}{A_{m1}} = 1.16 \times 10^3 \cdot psi$ — Tensile stress in fastener

$\sigma_{allow1bolt} := \sigma_{y\_SS\_bolt} = 3 \times 10^4 \cdot psi$ — Yield strength of SS SHCS

$SF_1 := \frac{\sigma_{allow1bolt}}{\sigma_1} = 25.867$ — Static Factor of Safety for Fastener

1.1a Seismic Analysis:

$SD_{x1} := SD_x \cdot W_1 = 25.5 \cdot lbf$

$SD_{y1} := SD_y \cdot W_1 = 17 \cdot lbf$

$SD_{z1} := SD_z \cdot W_1 = 25.5 \cdot lbf$

X-Dir:

$\tau_{1SDx} := \frac{SD_{x1}}{n_{tot1} \cdot A_{m1}} = 92.023 \cdot psi$ — Shear stress in fastener, including seismic

Y-Dir:

$T_{1SDy} := \frac{(W_1 + SD_{y1}) \cdot CG_1}{d_{1c} \cdot n_{t1}} = 27.547 \cdot lbf$ — Tensile force acting on fastener, including seismic

$\sigma_{1SDy} := \frac{T_{1SDy}}{A_{m1}} = 1.392 \times 10^3 \cdot psi$ — Tensile stress in fastener, including seismic

Z-Dir:

$\tau_{1SDz} := \frac{SD_{z1}}{n_{tot1} \cdot A_{m1}} = 92.023 \cdot psi$ — Shear stress in fastener, including seismic

$\sigma_{1SD} := \sigma_{1SDy} = 1.392 \times 10^3 psi$ — Resultant tensile stress in fastener

$\tau_{1SD} := \sqrt{\tau_{1SDx}^2 + \tau_{1SDz}^2} = 130.14 psi$ — Resultant shear stress in fastener

$\sigma_{vm1SD} := \sqrt{\sigma_{1SD}^2 + 3\left(\tau_{1SD}^2\right)} = 1.41 \times 10^3 \cdot psi$ Von Mises stresses in fastener, including seismic

$SF_{1SD} := \frac{\sigma_{allow1bolt}}{\sigma_{vm1SD}} = 21.279$ Seismic Factor of Safety for Fastener

1.2 Thread Shear in the Tapped Holes:

$\sigma_{yield1.2} := \sigma_{y\_Al6061T6} = 3.5 \times 10^4 \cdot psi$ Yield strength of Aluminum

$D_{m1} = 0.159 \cdot in$ Information on threaded inserts is unknown, assume no inserts (this is a conservative assumption)

$Le_1 := 1.5D_{n1} = 0.285 \cdot in$ Length of engagement unknown, assume 1.5 times the diameter (minimum)

$A_{s1} := \frac{\pi \cdot D_{m1} \cdot Le_1}{2} = 0.071 \cdot in^2$ Shear area of female threads

$\tau_{thread1} := \frac{T_1}{A_{s1}} = 323.007 \cdot psi$ Shear stress in female threads

$F_{preload1} := 0.6\sigma_{allow1bolt} \cdot \left(\frac{\pi D_{m1}^2}{4}\right) = 356.279 \cdot lbf$ Force due to preload torque

$\tau_{preload1} := \frac{F_{preload1}}{A_{s1}} = 5013.16 \cdot psi$ Shear stress in female threads, due to preload torque

$\tau_{maxthread1} := \begin{cases} \tau_{preload1} & \text{if } \tau_{preload1} > \tau_{thread1} \\ \tau_{thread1} & \text{otherwise} \end{cases} = 5013.16 \cdot ps$ Maximum shear stress in female threads

$SF_{thread1} := \frac{\sigma_{yield1.2}}{\sqrt{3} \cdot \tau_{maxthread1}} = 4.031$ Factor of Safety for Female Threads

1.2a Seismic Analysis:

Y-Dir:

$\tau_{thread1SDy} := \frac{T_{1SDy}}{A_{s1}} = 387.608 \cdot psi$ Shear stress in female threads, including seismic in the Y-direction

$\tau_{thread1SD} := \tau_{thread1SDy} = 387.608 \cdot psi$ Combined Shear stress in female threads, including seismic

$SF_{thread1SD} := \frac{\sigma_{yield1.2}}{\sqrt{3} \cdot \tau_{thread1SD}} = 52.133$ Seismic Factor of Safety for female threads

1.3 Recommended Torque:

$F_{bolt\_yield1} := \sigma_{allow1bolt} \cdot A_{m1} = 593.798 \cdot lbf$ Maximum force allowed on SS bolt

$F_{thread\_yield1} := \frac{\sigma_{yield1.2}}{\sqrt{3}} \cdot A_{s1} = 1.436 \times 10^{3} \cdot lbf$ Maximum force allowed on female threads

$F_{max\_torque1} := \begin{cases} F_{bolt\_yield1} & \text{if } F_{thread\_yield1} > F_{bolt\_yield1} \\ F_{thread\_yield1} & \text{otherwise} \end{cases} = 593.8 \cdot lbf$ Maximum force allowed on Bolt / Female Threads

$K_1 := 0.20$ Friction factor for threads, per EDSS table 1.2-1, section 1.2.4.2, rev 1 (Female threads = Stainless Steel, Male threads = Stainless Steel, Friction = Lubricated - Silver Plated)

$T_{1.3} := K_1 \cdot D_{n1} \cdot F_{max\_torque1} \cdot (0.6) = 13.539 \cdot in \cdot lbf$ Recommended torque for bolt (60% of material yield strength used, per EDSS section 1.2). The TIM Boat has SS threaded inserts, therefore the bolt will actually yield first.

2. TIM Mounting Rail (Left mounting rail, TIM mounting) to TIM Mounting Frame (Arm, TIM mounting)

Given:

$W_2 := W_{spect} = 85 \cdot lbf$ — Dead weight of Spectrometer Assembly

$CG_2 := CG_{spect} - 0.625\,in = 8.102 \cdot in$ — CG of Spectrometer Assembly

$d_{2c} := 13.125\,in$ — Distance between fasteners (x-direction)

$d_{2e} := (5.170 + .75 + .75)\,in = 6.67 \cdot in$ — Distance between fasteners (z-direction)

$n_{t2} := 2$ — Number of fasteners used for shear, due to moment loading

$n_{tot2} := 12$ — Total number of fasteners

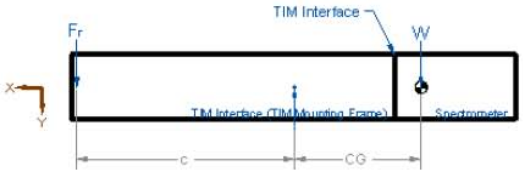

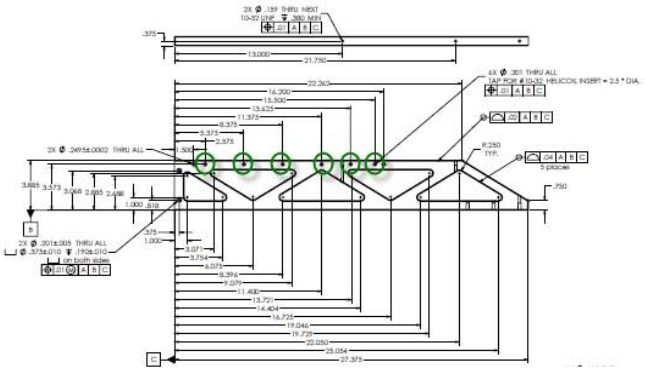

2.1 10-32 Fasteners:

$D_{n2} := 0.19in$ — Nominal diameter of 10-32

$TPI_2 := \frac{32}{in}$

$D_{m2} := D_{n2} - \frac{1}{TPI_2} = 0.159 \cdot in$ — Mean diameter of fastener

$A_{m2} := \frac{\pi \cdot (D_{m2})^2}{4} = 0.02 \cdot in^2$ — Area of fastener

$V_2 := \frac{W_2 \cdot CG_2}{d_{2c} \cdot n_{t2}} = 26.235 \cdot lbf$ — Shear force acting on fastener

$\tau_2 := \frac{V_2}{A_{m2}} = 1.325 \times 10^3 \cdot psi$ — Shear stress in fastener

$\sigma_{vm2} := \sqrt{3 \cdot (\tau_2)^2} = 2.296 \times 10^3 \cdot psi$ — Von Mises stresses in fastener

$\sigma_{allow2bolt} := \sigma_{y\_SS\_bolt} = 3 \times 10^4 \cdot psi$ — Yield strength of SS SHCS

$SF_2 := \frac{\sigma_{allow2bolt}}{\sigma_{vm2}} = 13.068$ — Static Factor of Safety for Fastener

2.1a Seismic Analysis:

$SD_{x2} := SD_x \cdot W_2 = 25.5 \cdot lbf$

$SD_{y2} := SD_y \cdot W_2 = 17 \cdot lbf$

$SD_{z2} := SD_z \cdot W_2 = 25.5 \cdot lbf$

X-Dir:

$\tau_{2SDx} := \frac{SD_{x2}}{n_{tot2} \cdot A_{m2}} = 107.36 \cdot psi$ — Shear stress in fastener, including seismic

$\sigma_{vm2SDx} := \sqrt{3 \cdot (\tau_{2SDx})^2} = 185.953 \cdot psi$ — Von Mises stresses in fastener, including seismic in the X-direction

Y-Dir:

$V_{2SDy} := \frac{(W_2 + SD_{y2}) \cdot CG_2}{d_{2c} \cdot n_{t2}} = 31.482 \cdot lbf$ — Shear force acting on fastener, including seismic

$\tau_{2SDy} := \frac{V_{2SDy}}{A_{m2}} = 1.591 \times 10^3 \cdot psi$ — Shear stress in fastener, including seismic

$\sigma_{vm2SDy} := \sqrt{3 \cdot (\tau_{2SDy})^2} = 2.755 \times 10^3 \cdot psi$ — Von Mises stresses in fastener, including seismic in the Y-direction

Z-Dir:

$T_{2SDz} := \frac{SD_{z2} \cdot CG_2}{d_{2c} \cdot \left(\frac{n_{tot2}}{2}\right)} = 2.624 \cdot lbf$ Tensile force acting on fastener, including seismic

$\sigma_{2SDz} := \frac{T_{2SDz}}{A_{m2}} = 132.545 \cdot psi$ Tensile stress in fastener, including seismic

$\sigma_{vm2SDz} := \sqrt{\sigma_{2SDz}^2} = 132.545 \cdot psi$ Von Mises stresses in fastener, including seismic in the Z-direction

$\sigma_{vm2SD} := \sigma_{vm2SDx} + \sigma_{vm2SDy} + \sigma_{vm2SDz} = 3.073 \times 10^3 \cdot psi$ Von Mises stresses in fastener, including seismic

$SF_{2SD} := \frac{\sigma_{allow2bolt}}{\sigma_{vm2SD}} = 9.761$ Seismic Factor of Safety for Fastener

2.2 Thread Shear in the Tapped Holes:

$\sigma_{yield2.2} := \sigma_{y\_Al6061T6} = 3.5 \times 10^4 \cdot psi$ Yield strength of Aluminum

$D_{m2} = 0.159 \cdot in$ Information on threaded inserts is unknown, assume no inserts (this is a conservative assumption)

$Le_2 := 0.401\ in$ Length of engagement

$A_{s2} := \frac{\pi \cdot D_{m2} \cdot Le_2}{2} = 0.1 \cdot in^2$ Shear area of female threads

$\tau_{thread2} := 0psi$ Shear stress in female threads

$F_{preload2} := 0.6\sigma_{allow2bolt} \cdot \left(\frac{\pi D_{m2}^2}{4}\right) = 356.279 \cdot lbf$ Force due to preload torque

$\tau_{preload2} := \frac{F_{preload2}}{A_{s2}} = 3562.97 \cdot psi$ Shear stress in female threads, due to preload torque

$\tau_{maxthread2} := \begin{cases} \tau_{preload2} & \text{if } \tau_{preload2} > \tau_{thread2} \\ \tau_{thread2} & \text{otherwise} \end{cases} = 3562.97 \cdot ps$ Maximum shear stress in female threads

$SF_{thread2} := \frac{\sigma_{yield2.2}}{\sqrt{3} \cdot \tau_{maxthread2}} = 5.671$ Factor of Safety for Female Threads

2.2a Seismic Analysis:

Since bolt pre-load is the greater force on the female threads, no seismic analysis is necessary

2.3 Recommended Torque:

$F_{bolt\_yield2} := \sigma_{allow2bolt} \cdot A_{m2} = 593.798 \cdot lbf$ Maximum force allowed on SS bolt

$F_{thread\_yield2} := \frac{\sigma_{yield2.2}}{\sqrt{3}} \cdot A_{s2} = 2.021 \times 10^3 \cdot lbf$ Maximum force allowed on female threads

$F_{max\_torque2} := \begin{cases} F_{bolt\_yield2} & \text{if } F_{thread\_yield2} > F_{bolt\_yield2} \\ F_{thread\_yield2} & \text{otherwise} \end{cases} = 593.8 \cdot lbf$ Maximum force allowed on Bolt / Female Threads

$K_2 := 0.20$ Friction factor for threads, per EDSS table 1.2-1, section 1.2.4.2, rev 1 (Female threads = Stainless Steel, Male threads = Stainless Steel, Friction = Lubricated - Silver Plated)

$T_{2.3} := K_2 \cdot D_{n2} \cdot F_{max\_torque2} \cdot (0.6) = 13.539 \cdot in \cdot lbf$ Recommended torque for bolt (60% of material yield strength used, per EDSS section 1.2). The TIM Mounting Frame has SS threaded inserts, therefore the bolt will actually yield first.

3. TIM Mounting Frame (Arm, TIM mounting) to Support Plate (Support plate - TIM mounting)

Given:

$W_3 := W_{spect} = 85 \cdot lbf$ — Dead weight of Spectrometer Assembly

$CG_3 := (1.75 + .102)in = 1.852 \cdot in$ — CG of Spectrometer Assembly

$d_{3a} := 4in$ — Distance between fasteners (x-direction)

$d_{3b} := (6.233 - 0.313)in = 5.92 \cdot in$ — Distance between fasteners (z-direction)

$n_{t3} := 6$ — Number of fasteners used for tension only

$n_{tot3} := 6$ — Total number of fasteners

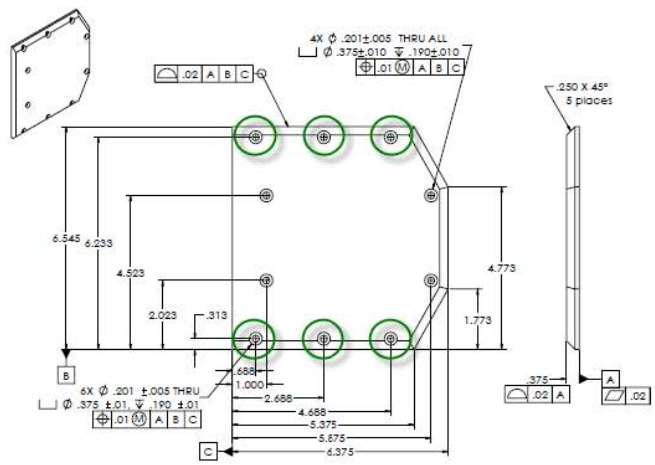

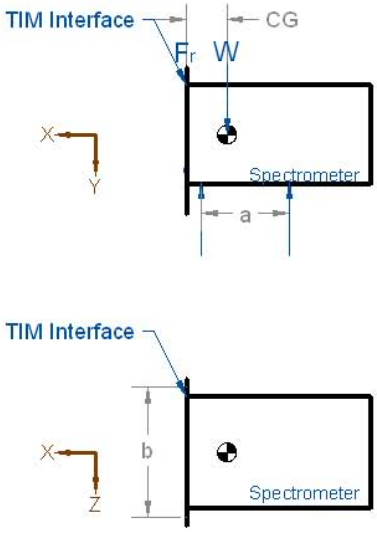

3.1 10-32 Fasteners:

$D_{n3} := 0.19in$ — Nominal diameter of 10-32

$TPI_3 := \frac{32}{in}$

$D_{m3} := D_{n3} - \frac{1}{TPI_3} = 0.159 \cdot in$ — Mean diameter of fastener

$A_{m3} := \frac{\pi \cdot (D_{m3})^2}{4} = 0.02 \cdot in^2$ — Area of fastener

$T_3 := \frac{W_3}{n_{t3}} = 14.167 \cdot lbf$ — Tensile force acting on fastener

$\sigma_3 := \frac{T_3}{A_{m3}} = 715.732 \cdot psi$ — Tensile stress in fastener

$\sigma_{vm3} := \sqrt{\sigma_3^{\,2}} = 715.732 \cdot psi$ — Von Mises stresses in fastener

$\sigma_{allow3bolt} := \sigma_{y\_SS\_bolt} = 3 \times 10^4 \cdot psi$ — Yield strength of SS SHCS

$SF_3 := \frac{\sigma_{allow3bolt}}{\sigma_{vm3}} = 41.915$ — Static Factor of Safety for Fastener

3.1a Seismic Analysis:

$SD_{x3} := SD_x \cdot W_3 = 25.5 \cdot lbf$

$SD_{y3} := SD_y \cdot W_3 = 17 \cdot lbf$

$SD_{z3} := SD_z \cdot W_3 = 25.5 \cdot lbf$

X-Dir:

$\tau_{3SDx} := \frac{SD_{x3}}{n_{tot3} \cdot A_{m3}} = 214.72 \cdot psi$ — Shear stress in fastener, including seismic

$\sigma_{vm3SDx} := \sqrt{3}\,\tau_{3SDx} = 371.905 \cdot psi$ — Von Mises stresses in fastener, including seismic in the X-direction

Y-Dir:

$T_{3SDy} := \frac{W_3 + SD_{y3}}{n_{t3}} = 17 \cdot lbf$ — Tensile force acting on fastener, including seismic

$\sigma_{3SDy} := \frac{T_{3SDy}}{A_{m3}} = 858.878 \cdot psi$ — Tensile stress in fastener, including seismic

$\sigma_{vm3SDy} := \sigma_{3SDy} = 858.878 \cdot psi$ — Von Mises stresses in fastener, including seismic in the Y-direction

Z-Dir:

$\tau_{3SDz} := \frac{SD_{z3}}{n_{tot3} \cdot A_{m3}} = 214.72 \cdot psi$ Shear stress in fastener, including seismic

$\sigma_{vm3SDz} := \sqrt{3} \cdot \tau_{3SDz} = 371.905 \cdot psi$ Von Mises stresses in fastener, including seismic in the Z-direction

$\sigma_{vm3SD} := \sigma_{vm3SDx} + \sigma_{vm3SDy} + \sigma_{vm3SDz} = 1.603 \times 10^3 \cdot psi$ Von Mises stresses in fastener, including seismic

$SF_{3SD} := \frac{\sigma_{allow3bolt}}{\sigma_{vm3SD}} = 18.719$ Seismic Factor of Safety for Fastener

3.2 Thread Shear in the Tapped Holes:

$\sigma_{yield3.2} := \sigma_{y\_Al6061T6} = 3.5 \times 10^4 \cdot psi$ Yield strength of Aluminum

$D_{m3} = 0.159 \cdot in$ Mean Diameter

$Le_3 := 0.50in$ Minimum Length of engagement

$A_{s3} := \frac{\pi \cdot D_{m3} \cdot Le_3}{2} = 0.125 \cdot in^2$ Shear area of female threads

$\tau_{thread3} := \frac{T_3}{A_{s3}} = 113.622 \cdot psi$ Shear stress in female threads

$F_{preload3} := 0.6\sigma_{allow3bolt} \cdot \left(\frac{\pi D_{m3}^2}{4}\right) = 356.279 \cdot lbf$ Force due to preload torque

$\tau_{preload3} := \frac{F_{preload3}}{A_{s3}} = 2857.5 \cdot psi$ Shear stress in female threads, due to preload torque

$\tau_{maxthread3} := \begin{cases} \tau_{preload3} & \text{if } \tau_{preload3} > \tau_{thread3} \\ \tau_{thread3} & \text{otherwise} \end{cases} = 2857.5 \cdot psi$ Maximum shear stress in female threads

$SF_{thread3} := \frac{\sigma_{yield3.2}}{\sqrt{3} \cdot \tau_{maxthread3}} = 7.072$ Factor of Safety for Female Threads

3.2a Seismic Analysis:

Since bolt pre-load is the greater force on the female threads, no seismic analysis is necessary

3.3 Recommended Torque:

$F_{bolt\_yield3} := \sigma_{allow3bolt} \cdot A_{m3} = 593.798 \cdot lbf$ Maximum force allowed on SS bolt

$F_{thread\_yield3} := \frac{\sigma_{yield3.2}}{\sqrt{3}} \cdot A_{s3} = 2.519 \times 10^{3} \cdot lbf$ Maximum force allowed on female threads

$F_{max\_torque3} := \begin{cases} F_{bolt\_yield3} & \text{if } F_{thread\_yield3} > F_{bolt\_yield3} \\ F_{thread\_yield3} & \text{otherwise} \end{cases} = 593.8 \cdot l$ Maximum force allowed on Bolt / Female Threads

$K_3 := 0.20$ Friction factor for threads, per EDSS table 1.2-1, section 1.2.4.2, rev 1 (Female threads = Aluminum, Male threads = Stainless Steel, Friction = Lubricated - Silver Plated)

$T_{3.3} := K_3 \cdot D_{n3} \cdot F_{max\_torque3} \cdot (0.6) = 13.539 \cdot in \cdot lbf$ Recommended torque for bolt (60% of material yield strength used, per EDSS section 1.2)

4. Support Plate (Support plate - TIM mounting) to Side Plate

Given:

$W_4 := W_{spect} = 85 \cdot lbf$	Dead weight of Spectrometer Assembly
$CG_4 := (1.75 + .102)in = 1.852 \cdot in$	CG of Spectrometer Assembly
$d_{4a} := (4.375 - 1.75)in = 2.625\ in$	Distance between fasteners (x-direction)
$d_{4b} := 2.55in$	Distance between fasteners (z-direction)
$n_{t4} := 4$	Number of fasteners used for tension only
$n_{tot4} := 4$	Total number of fasteners

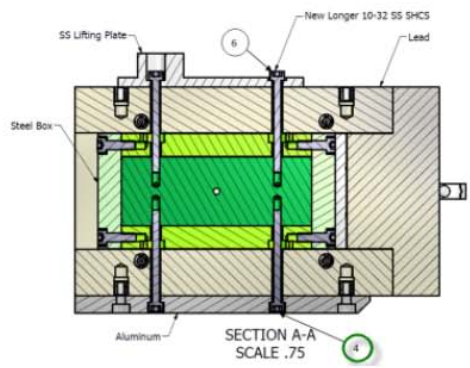

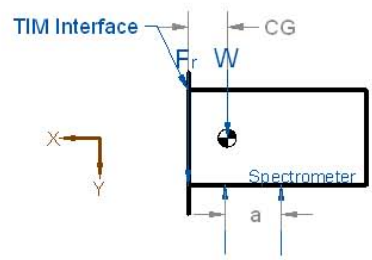

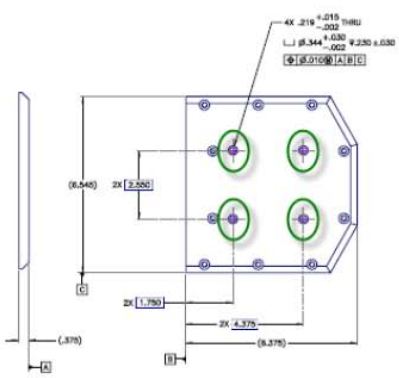

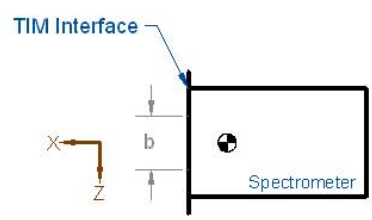

4.1 10-32 Fasteners:

$D_{n4} := 0.19in$ — Nominal diameter of 10-32

$TPI_4 := \frac{32}{in}$

$D_{m4} := D_{n4} - \frac{1}{TPI_4} = 0.159 \cdot in$ — Mean diameter of fastener

$A_{m4} := \frac{\pi \cdot (D_{m4})^2}{4} = 0.02 \cdot in^2$ — Area of fastener

$\sigma_{allow4bolt} := \sigma_{y\_SS\_bolt} = 3 \times 10^4 \cdot psi$ — Yield strength of SS SHCS

4.1a Seismic Analysis:

$SD_{x4} := SD_x \cdot W_4 = 25.5 \cdot lbf$

$SD_{y4} := SD_y \cdot W_4 = 17 \cdot lbf$

$SD_{z4} := SD_z \cdot W_4 = 25.5 \cdot lbf$

X-Dir:

$\tau_{4SDx} := \frac{SD_{x4}}{n_{tot4} \cdot A_{m4}} = 322.079 \cdot psi$ — Shear stress in fastener, including seismic

$\sigma_{vm4SDx} := \sqrt{3}\,\tau_{4SDx} = 557.858 \cdot psi$ — Von Mises stresses in fastener, including seismic in the X-direction

Y-Dir:

$T_{4SDy} := \frac{SD_{y4}}{n_{t4}} = 4.25 \cdot lbf$ — Tensile force acting on fastener, including seismic

$\sigma_{4SDy} := \frac{T_{4SDy}}{A_{m4}} = 214.72 \cdot psi$ — Tensile stress in fastener, including seismic

$\sigma_{vm4SDy} := \sigma_{4SDy} = 214.72 \cdot psi$ — Von Mises stresses in fastener, including seismic in the Y-direction

Z-Dir:

$\tau_{4SDz} := \frac{SD_{z4}}{n_{tot4} \cdot A_{m4}} = 322.079 \cdot psi$ — Shear stress in fastener, including seismic

$\sigma_{vm4SDz} := \sqrt{3}\,\tau_{4SDz} = 557.858 \cdot psi$ — Von Mises stresses in fastener, including seismic in the Z-direction

$\sigma_{vm4SD} := \sigma_{vm4SDx} + \sigma_{vm4SDy} + \sigma_{vm4SDz} = 1330.44 \cdot psi$ — Von Mises stresses in fastener, including seismic

$SF_{4SD} := \frac{\sigma_{allow4bolt}}{\sigma_{vm4SD}} = 22.549$ Seismic Factor of Safety for Fastener

4.2 Thread Shear in the Tapped Holes:

$\sigma_{yield4.2} := \sigma_{y\_A36} = 36000 \cdot psi$ Yield strength of A36 Steel

$D_{m4} = 0.159 \cdot in$ Mean Diameter

$Le_4 := 0.25in$ Minimum Length of engagement

$A_{s4} := \frac{\pi \cdot D_{m4} \cdot Le_4}{2} = 0.062 \cdot in^2$ Shear area of female threads

$\tau_{thread4} := 0psi$ Shear stress in female threads

$F_{preload4} := 0.6\sigma_{allow4bolt} \cdot \left(\frac{\pi D_{m4}^2}{4}\right) = 356.279 \cdot lbf$ Force due to preload torque

$\tau_{preload4} := \frac{F_{preload4}}{A_{s4}} = 5715 \cdot psi$ Shear stress in female threads, due to preload torque

$\tau_{maxthread4} := \begin{cases} \tau_{preload4} & \text{if } \tau_{preload4} > \tau_{thread4} \\ \tau_{thread4} & \text{otherwise} \end{cases} = 5715 \cdot psi$ Maximum shear stress in female threads

$SF_{thread4} := \frac{\sigma_{yield4.2}}{\sqrt{3} \cdot \tau_{maxthread4}} = 3.637$ Factor of Safety for Female Threads

4.2a Seismic Analysis:

Since bolt pre-load is the greater force on the female threads, no seismic analysis is necessary

4.3 Recommended Torque:

$F_{bolt\_yield4} := \sigma_{allow4bolt} \cdot A_{m4} = 593.798 \cdot lbf$ Maximum force allowed on SS bolt

$F_{thread\_yield4} := \frac{\sigma_{yield4.2}}{\sqrt{3}} \cdot A_{s4} = 1.296 \times 10^3 \cdot lbf$ Maximum force allowed on female threads

$F_{max\_torque4} := \begin{cases} F_{bolt\_yield4} & \text{if } F_{thread\_yield4} > F_{bolt\_yield4} \\ F_{thread\_yield4} & \text{otherwise} \end{cases} = 593.8 \cdot lbf$ Maximum force allowed on Bolt / Female Threads

$K_4 := 0.20$ Friction factor for threads, per EDSS table 1.2-1, section 1.2.4.2, rev 1 (Female threads = Aluminum, Male threads = Stainless Steel, Friction = Lubricated - Silver Plated)

$T_{4.3} := K_4 \cdot D_{n4} \cdot F_{max\_torque4} \cdot (0.6) = 13.539 \cdot in \cdot lbf$ Recommended torque for bolt (60% of material yield strength used, per EDSS section 1.2)

5. Hoist Ring to Lifting Bracket

Given:

$W_{HR} := W_{spect} = 85 \cdot lbf$ — Dead weight of Spectrometer Assembly

$CG_5 := CG_{spect} = 8.727 \cdot in$ — CG of Spectrometer Assembly

$n_{t5} := 1$ — Number of fasteners used for tension only

$n_{tot5} := 1$ — Total number of fasteners

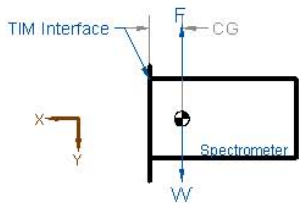

5.1 Thread Shear in the Tapped Holes:

$D_{nHR} := \frac{1}{2} in$ — Nominal diameter of 1/2-13

$TPI_{HR} := \frac{13}{in}$

$Le_{HR} := 1.2in$ — Length of engagement

$T_{installHR} := 28ft \cdot lbf$ — Installation torque, per manufacturer

$K_{HR} := 0.20$ — Friction factor for threads, per EDSS table 1.2-1, section 1.2.4.2, rev 1 (Female threads = Stainless Steel, Male threads = Stainless Steel, Friction = Lubricated)

$\sigma_{yieldHR} := \sigma_{y\_304SS} = 3 \times 10^4 \cdot psi$ — Yield strength of 304 SS

$\sigma_{ultHR} := \sigma_{u\_304SS} = 7.5 \times 10^4 \cdot psi$ — Ultimate strength of 304 SS

$D_{mHR} := D_{nHR} - \frac{1}{TPI_{HR}} = 0.423 \cdot in$ — Mean diameter of fastener

$A_{mHR} := \frac{\pi \cdot (D_{mHR})^2}{4} = 0.141 \cdot in^2$ — Area of fastener

$A_{sHR} := \frac{\pi \cdot D_{mHR} \cdot Le_{HR}}{2} = 0.797 \cdot in^2$ — Shear area of female threads

$T_{HR} := W_{HR} = 85 \cdot lbf$ — Tensile force acting on fastener

$\tau_{threadHR} := \frac{T_{HR}}{A_{sHR}} = 106.586 \cdot psi$ — Shear stress in female threads

$F_{installHR} := \frac{T_{installHR}}{K_{HR} \cdot D_{nHR}} = 3.36 \times 10^3 \cdot lbf$ Force due to installation torque

$\tau_{installHR} := \frac{F_{installHR}}{A_{sHR}} = 4213.27 \cdot psi$ Shear stress in female threads, due to installation torque

$\tau_{maxthreadHR} := \begin{cases} \tau_{installHR} & \text{if } \tau_{installHR} > \tau_{threadHR} \\ \tau_{threadHR} & \text{otherwise} \end{cases} = 4213.27 \cdot psi$ Maximum shear stress in female threads

$SF_{threadHRy} := \frac{\sigma_{yieldHR}}{\sqrt{3} \cdot \tau_{maxthreadHR}} = 4.111$ Yield Factor of Safety for Female Threads must be greater than 6 for single point failure

$SF_{threadHRu} := \frac{\sigma_{ultHR}}{\sqrt{3} \cdot \tau_{maxthreadHR}} = 10.277$ Ultimate Factor of Safety for Female Threads must be greater than 8 for single point failure

Look at manufacturers specifications: Manufacturer's factor of safety on ultimate stress... The Crosby data sheet for an HR-125 UNC Swivel Hoist Ring specifies the ultimate load is 5 times the WLL.

$F_{totalHR} := F_{installHR} + \frac{T_{HR}}{7} = 3.372 \times 10^3 \cdot lbf$ Total Load = Bolt Preload + (1/7) Applied Load

$\tau_{totalHR} := \frac{F_{totalHR}}{A_{sHR}} = 4.228 \times 10^3 \cdot psi$ Shear stress in female threads, due to total load

$SF_{threadHRman} := \frac{\sigma_{ultHR}}{\tau_{totalHR}} = 17.737$ Factor of Safety for Female Threads must be greater than 5, per manufacturers specifications

6. Lifting Bracket to Side Plate

Given:

$W_6 := W_{spect} = 85 \cdot lbf$	Dead weight of Spectrometer Assembly
$CG_6 := (1.75 + .102)in = 1.852 \cdot in$	CG of Spectrometer Assembly
$d_{6a} := (3.023 - .398)in = 2.625\ in$	Distance between fasteners (x-direction)
$d_{6b} := 2.55in$	Distance between fasteners (z-direction)
$n_{t6} := 4$	Number of fasteners used for tension only
$n_{tot6} := 4$	Total number of fasteners

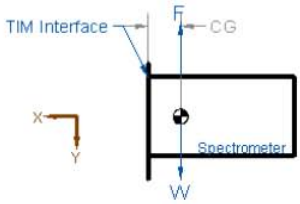

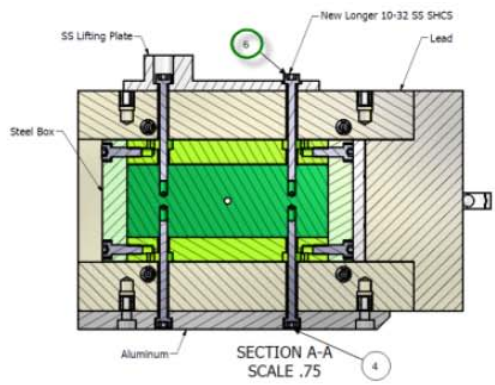

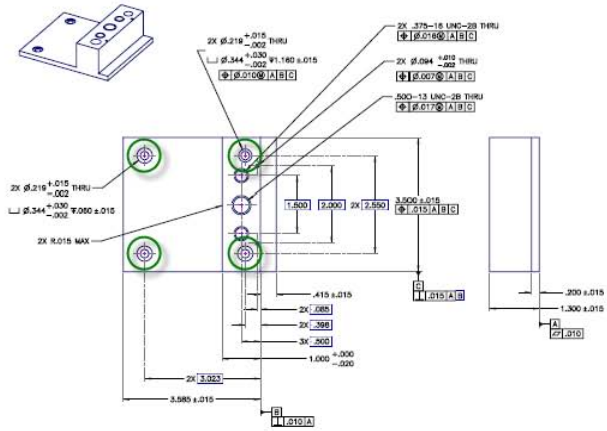

6.1 10-32 Fasteners:

$D_{n6} := 0.19in$ Nominal diameter of 10-32

$TPI_6 := \frac{32}{in}$

$D_{m6} := D_{n6} - \frac{1}{TPI_6} = 0.159 \cdot in$ Mean diameter of fastener

$A_{m6} := \frac{\pi \cdot (D_{m6})^2}{4} = 0.02 \cdot in^2$ Area of fastener

$T_6 := \frac{W_6}{n_{t6}} = 21.25 \cdot lbf$ Tensile force acting on fastener

$\sigma_6 := \frac{T_6}{A_{m6}} = 1.074 \times 10^3 \cdot psi$ Tensile stress in fastener

$\sigma_{vm6} := \sqrt{\sigma_6^{\,2}} = 1.074 \times 10^3 \cdot psi$ Von Mises stresses in fastener

$\sigma_{allow6bolt} := \sigma_{y\_SS\_bolt} = 3 \times 10^4 \cdot psi$ Yield strength of SS SHCS

$SF_6 := \frac{\sigma_{allow6bolt}}{\sigma_{vm6}} = 27.943$ Static Factor of Safety for Fastener

6.2 Thread Shear in the Tapped Holes:

$\sigma_{yield6.2} := \sigma_{y\_A36} = 36000 \cdot psi$ Yield strength of A36 Steel

$D_{m6} = 0.159 \cdot in$ Mean Diameter

$Le_6 := 0.25in$ Minimum Length of engagement

$A_{s6} := \frac{\pi \cdot D_{m6} \cdot Le_6}{2} = 0.062 \cdot in^2$ Shear area of female threads

$\tau_{thread6} := \frac{T_6}{A_{s6}} = 340.867 \cdot psi$ Shear stress in female threads

$F_{preload6} := 0.6\sigma_{allow6bolt} \cdot \left(\frac{\pi D_{m6}^{\,2}}{4}\right) = 356.279 \cdot lbf$ Force due to preload torque

$\tau_{preload6} := \frac{F_{preload6}}{A_{s6}} = 5715 \cdot psi$ Shear stress in female threads, due to preload torque

$\tau_{maxthread6} := \begin{cases} \tau_{preload6} & \text{if } \tau_{preload6} > \tau_{thread6} \\ \tau_{thread6} & \text{otherwise} \end{cases} = 5715 \cdot psi$ Maximum shear stress in female threads

$SF_{thread6} := \frac{\sigma_{yield6.2}}{\sqrt{3} \cdot \tau_{maxthread6}} = 3.637$ Factor of Safety for Female Threads

6.3 Recommended Torque:

$F_{bolt\_yield6} := \sigma_{allow6bolt} \cdot A_{m6} = 593.798 \cdot lbf$ Maximum force allowed on SS bolt

$F_{thread\_yield6} := \frac{\sigma_{yield6.2}}{\sqrt{3}} \cdot A_{s6} = 1.296 \times 10^{3} \cdot lbf$ Maximum force allowed on female threads

$F_{max\_torque6} := \begin{cases} F_{bolt\_yield6} & \text{if } F_{thread\_yield6} > F_{bolt\_yield6} \\ F_{thread\_yield6} & \text{otherwise} \end{cases} = 593.8 \cdot lbf$ Maximum force allowed on Bolt / Female Threads

$K_6 := 0.20$ Friction factor for threads, per EDSS table 1.2-1, section 1.2.4.2, rev 1 (Female threads = Aluminum, Male threads = Stainless Steel, Friction = Lubricated - Silver Plated)

$T_{6.3} := K_6 \cdot D_{n6} \cdot F_{max\_torque6} \cdot (0.6) = 13.539 \cdot in \cdot lbf$ Recommended torque for bolt (60% of material yield strength used, per EDSS section 1.2)

7. Lifting Handle to Lifting Bracket

Given:

$W_H := W_{spect} = 85 \cdot lbf$ — Dead weight of Spectrometer Assembly

$CG_7 := (1.75 + .102)in = 1.852 \cdot in$ — CG of Spectrometer Assembly

$d_{H1} := 1.5in$ — Distance H1

$d_{H2} := 8.5in$ — Distance H2

$d_{H3} := 2.25in$ — Distance H3

$n_{t7} := 2$ — Number of fasteners used for tension only

$n_{tot7} := 2$ — Total number of fasteners

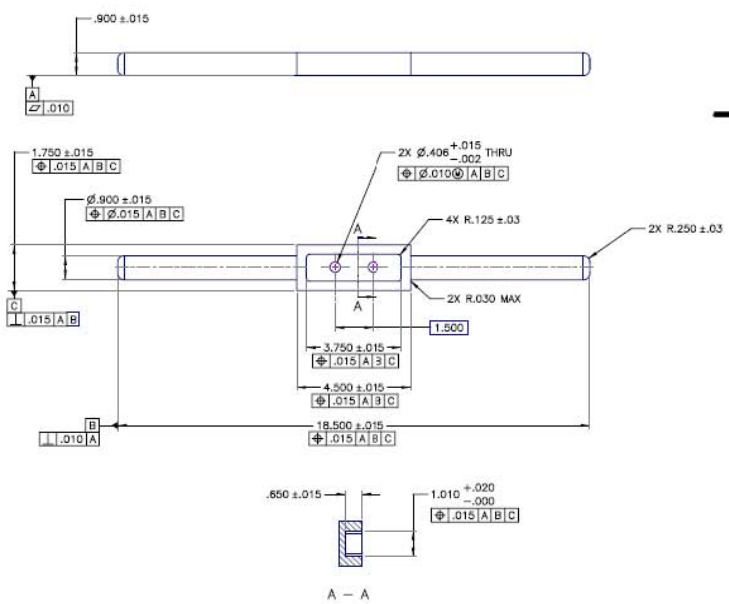

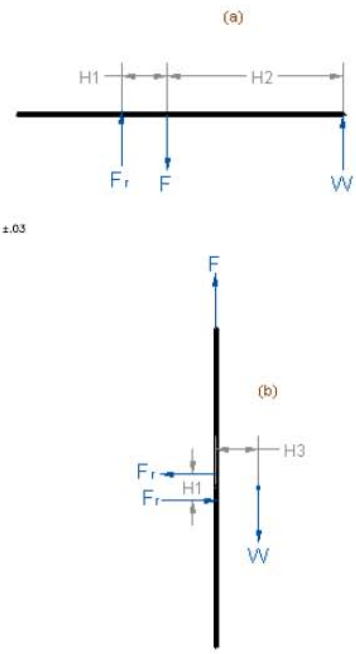

7.1 3/8-16 Fasteners:

$D_{nH} := \frac{3}{8}in$ — Nominal diameter of 3/8-16

$TPI_H := \frac{16}{in}$

$D_{mH} := D_{nH} - \frac{1}{TPI_H} = 0.312 \cdot in$ — Mean diameter of fastener

$A_{mH} := \frac{\pi \cdot (D_{mH})^2}{4} = 0.077 \cdot in^2$ — Area of fastener

7.1a. Pick up Handle by Furthest Edge (worst case):

$T_{H1a} := \frac{W_H \cdot (d_{H1} + d_{H2})}{d_{H1}} = 566.667 \cdot lbf$ Tensile force acting on fastener

$\sigma_{H1a} := \frac{T_{H1a}}{A_{mH}} = 7.388 \times 10^3 \cdot psi$ Tensile stress in fastener

$\sigma_{allowHbolt} := \sigma_{y\_SS\_bolt} = 3 \times 10^4 \cdot psi$ Yield strength of SS SHCS

$SF_{H1a} := \frac{\sigma_{allowHbolt}}{\sigma_{H1a}} = 4.061$ Yield Static Factor of Safety for Fastener

7.1b. Pick up Handle by One End:

$T_{H1b} := \frac{W_H \cdot d_{H3}}{d_{H1}} = 127.5 \cdot lbf$ Tensile force acting on fastener

$\sigma_{H1b} := \frac{T_{H1b}}{A_{mH}} = 1.662 \times 10^3 \cdot psi$ Tensile stress in fastener

$\tau_{H1b} := \frac{W_H}{A_{mH}} = 1.108 \times 10^3 \cdot psi$ Shear stress in fastener

$\sigma_{vmH1b} := \sqrt{\sigma_{H1b}^2 + 3 \cdot (\tau_{H1b})^2} = 2.539 \times 10^3 \cdot psi$ Von Mises stresses in fastener

$SF_{H1b} := \frac{\sigma_{allowHbolt}}{\sigma_{vmH1b}} = 11.814$ Static Factor of Safety for Fastener

7.2 Thread Shear in the Tapped Holes:

$\sigma_{yieldH.2} := \sigma_{y\_304SS} = 3 \times 10^4 \cdot psi$ Yield strength of 304 SS

$D_{mH} = 0.312 \cdot in$ Mean diameter of fastener

$Le_H := 0.625in$ Minimum length of engagement

$A_{sH} := \frac{\pi \cdot D_{mH} \cdot Le_H}{2} = 0.307 \cdot in^2$ Shear area of female threads

$\tau_{threadH} := \frac{T_{H1a}}{A_{sH}} = 1.847 \times 10^3 \cdot psi$ Shear stress in female threads

$F_{preloadH} := 0.6\sigma_{allowHbolt} \cdot \left(\frac{\pi D_{mH}^2}{4}\right) = 1.381 \times 10^3 \cdot lbf$ Force due to preload torque

$\tau_{preloadH} := \frac{F_{preloadH}}{A_{sH}} = 4500 \cdot psi$ Shear stress in female threads, due to preload torque

$\tau_{maxthreadH} := \begin{cases} \tau_{preloadH} & \text{if } \tau_{preloadH} > \tau_{threadH} \\ \tau_{threadH} & \text{otherwise} \end{cases} = 4500 \cdot psi$ Maximum shear stress in female threads

$SF_{threadH} := \frac{\sigma_{yieldH.2}}{\sqrt{3} \cdot \tau_{maxthreadH}} = 3.849$ Yield Factor of Safety for Female Threads

7.3 Recommended Torque:

$F_{bolt\_yieldH} := \sigma_{allowHbolt} \cdot A_{mH} = 2.301 \times 10^3 \cdot lbf$ Maximum force allowed on SS bolt

$F_{thread\_yieldH} := \frac{\sigma_{yieldH.2}}{\sqrt{3}} \cdot A_{sH} = 5.314 \times 10^3 \cdot lbf$ Maximum force allowed on female threads

$F_{max\_torqueH} := \begin{cases} F_{bolt\_yieldH} & \text{if } F_{thread\_yieldH} > F_{bolt\_yieldH} \\ F_{thread\_yieldH} & \text{otherwise} \end{cases} = 2300.97 \cdot lbf$ Maximum force allowed on Bolt / Female Threads

$K_H := 0.20$ Friction factor for threads, per EDSS table 1.2-1, section 1.2.4.2, rev 1 (Female threads = Aluminum, Male threads = Stainless Steel, Friction = Lubricated - Silver Plated)

$T_{H.3} := K_H \cdot D_{nH} \cdot F_{max\_torqueH} \cdot (0.6) = 103.544 \cdot in \cdot lbf$ Recommended torque for bolt (60% of material yield strength used, per EDSS section 1.2)

Appendix B – Counter Weight

The EPPS Counter weight is shown in figure B-1.

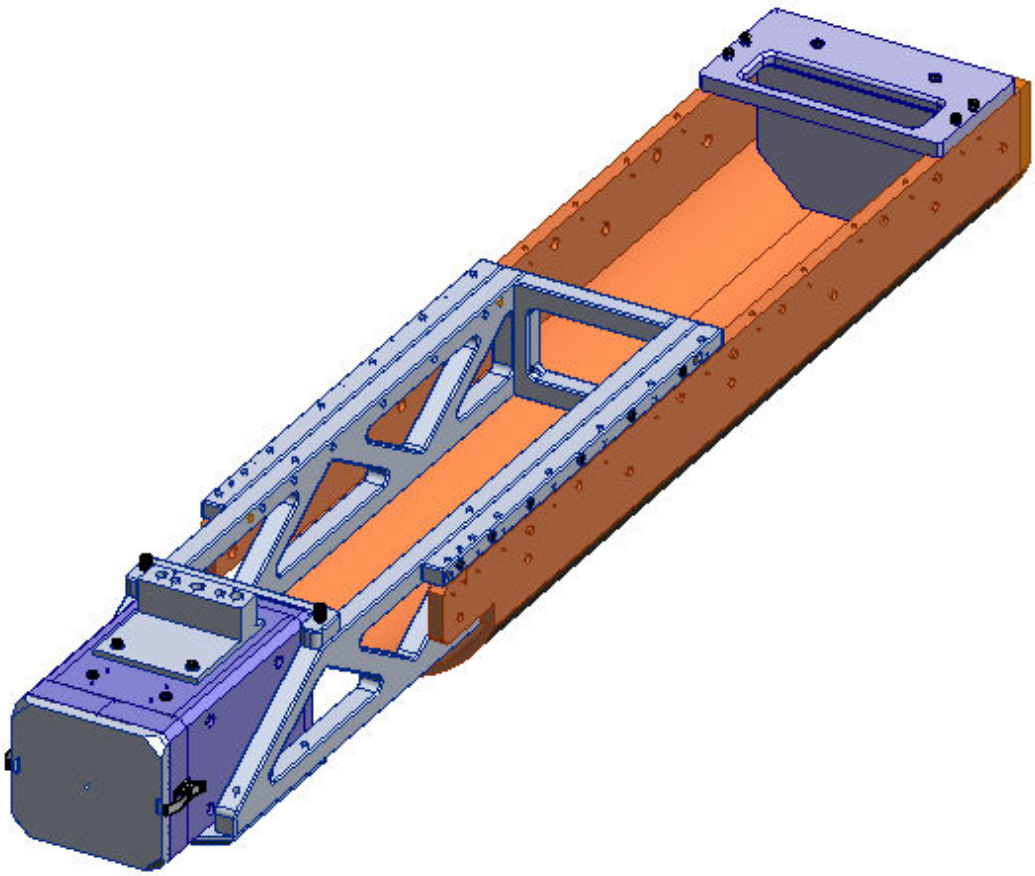

Fig. B-1. EPPS installed in TIM Boat, with Counter Weight.

System Weight & CG:

$W_{CW} := 19lbf$ — Weight of Counter Weight Assembly (Obtained from M. Saculla CAD Model 3/31/10)

Material Properties:

$\sigma_{y\_Al6061T6} := 35000psi$ — Yield strength of Aluminum 6060-T6

$\sigma_{y\_SS\_bolt} := 30000psi$ — Yield strength of SS bolt

$\sigma_{y\_304SS} := 30000psi$ — Yield strength of 304 Stainless Steel

1. Counterweight Part A to Counterweight Part B

Given:

$W_1 := W_{CW} = 19 \cdot lbf$ — Dead weight of Counterweight Assembly

$d_{1a} := 1.125in$ — Distance a

$d_{1b} := (4.5 - 1.125)in = 3.375 \cdot in$ — Distance b

$n_{tot1} := 2$ — Total number of fasteners

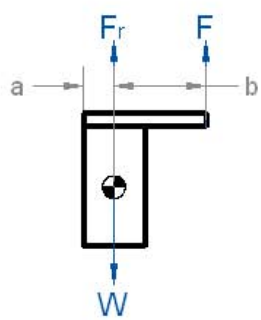

1.1 1/4-20 Fasteners:

$D_{n1} := 0.25in$ — Nominal diameter of 1/4-20

$TPI_1 := \frac{20}{in}$

$D_{m1} := D_{n1} - \frac{1}{TPI_1} = 0.2 \cdot in$ — Mean diameter of fastener

$A_{m1} := \frac{\pi \cdot (D_{m1})^2}{4} = 0.031 \cdot in^2$ — Area of fastener

$T_1 := \frac{W_1 \cdot (d_{1a} + d_{1b})}{d_{1a} \cdot n_{tot1}} = 38 \cdot lbf$ Tensile force acting on fastener

$\sigma_1 := \frac{T_1}{A_{m1}} = 1.21 \times 10^3 \cdot psi$ Tensile stress in fastener

$\sigma_{allow1bolt} := \sigma_{y\_SS\_bolt} = 3 \times 10^4 \cdot psi$ Yield strength of SS SHCS

$SF_1 := \frac{\sigma_{allow1bolt}}{\sigma_1} = 24.802$ Static Factor of Safety for Fastener

1.2 Thread Shear in the Tapped Holes:

$\sigma_{yield1.2} := \sigma_{y\_304SS} = 3 \times 10^4 \cdot psi$ Yield strength of 304 SS

$Le_1 := .5in$ Length of engagement

$A_{s1} := \frac{\pi \cdot D_{m1} \cdot Le_1}{2} = 0.157 \cdot in^2$ Shear area of female threads

$\tau_{thread1} := \frac{T_1}{A_{s1}} = 241.916 \cdot psi$ Shear stress in female threads

$F_{preload1} := 0.6 \sigma_{allow1bolt} \cdot \left(\frac{\pi D_{m1}^2}{4}\right) = 565.487 \cdot lbf$ Force due to preload torque

$\tau_{preload1} := \frac{F_{preload1}}{A_{s1}} = 3600 \cdot psi$ Shear stress in female threads, due to preload torque

$\tau_{maxthread1} := \begin{cases} \tau_{preload1} & \text{if } \tau_{preload1} > \tau_{thread1} \\ \tau_{thread1} & \text{otherwise} \end{cases} = 3600 \cdot psi$ Maximum shear stress in female threads

$SF_{thread1} := \frac{\sigma_{yield1.2}}{\sqrt{3} \cdot \tau_{maxthread1}} = 4.811$ Factor of Safety for Female Threads

1.3 Recommended Torque:

$F_{bolt\_yield1} := \sigma_{allow1bolt} \cdot A_{m1} = 942.478 \cdot lbf$ Maximum force allowed on SS bolt

$F_{thread\_yield1} := \frac{\sigma_{yield1.2}}{\sqrt{3}} \cdot A_{s1} = 2.721 \times 10^3 \cdot lbf$ Maximum force allowed on female threads

$F_{max\_torque1} := \begin{cases} F_{bolt\_yield1} & \text{if } F_{thread\_yield1} > F_{bolt\_yield1} \\ F_{thread\_yield1} & \text{otherwise} \end{cases} = 942.48 \cdot lbf$ Maximum force allowed on Bolt / Female Threads

$K_1 := 0.20$ Friction factor for threads, per EDSS table 1.2-1, section 1.2.4.2, rev 1 (Female threads = Stainless Steel, Male threads = Stainless Steel, Friction = Lubricated - Silver Plated)

$T_{1.3} := K_1 \cdot D_{n1} \cdot F_{max\_torque1} \cdot (0.6) = 28.274 \cdot in \cdot lbf$ Recommended torque for bolt (60% of material yield strength used, per EDSS section 1.2).

Appendix C –EPPS Drawings

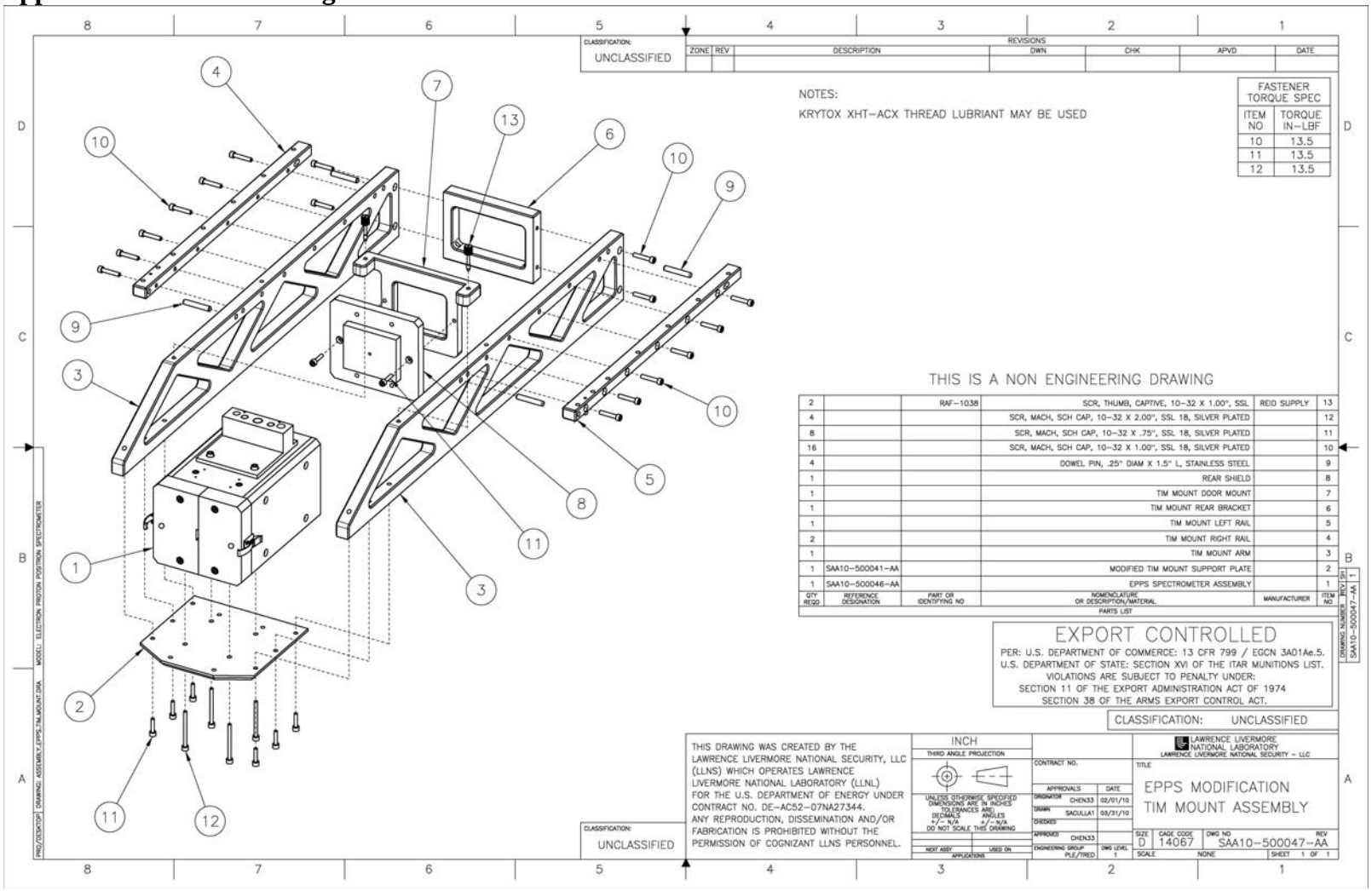

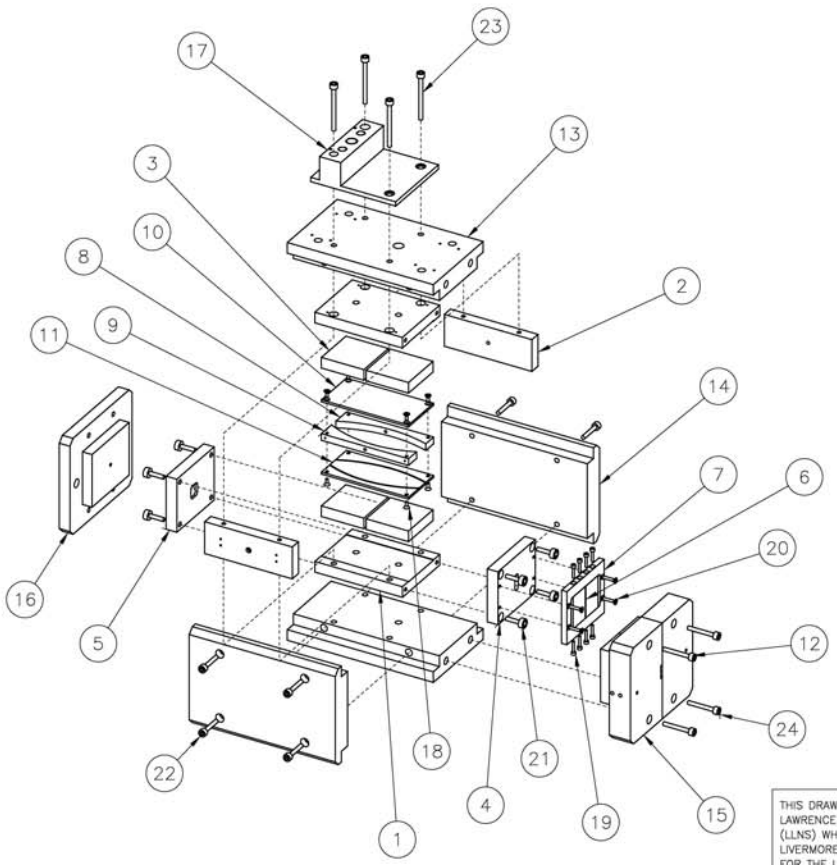

CLASSIFICATION: UNCLASSIFIED

REVISIONS

ZONE	REV	DESCRIPTION	DWN	CHK	APVD	DATE

NOTES:

KRYTOX XHT-ACX THREAD LUBRIANT MAY BE USED

FASTENER TORQUE SPEC

ITEM NO	TORQUE IN-LBF
22	5.0
23	13.5
24	5.0

THIS IS A NON ENGINEERING DRAWING

QTY REQD	REFERENCE DESIGNATION	PART OR IDENTIFYING NO	NOMENCLATURE OR DESCRIPTION/MATERIAL	MANUFACTURER	ITEM NO
4			SCR, MACH, SCH CAP, 10-32 X 1.25", SSL 18, SILVER PLATED		24
4			SCR, MACH, SCH CAP, 10-32 X 2.00", SSL 18, SILVER PLATED		23
8			SCR, MACH, SCH CAP, 10-32 X 1.00", SSL 18, SILVER PLATED		22
8			SCR, MACH, SCH CAP, 10-32 X .63", SSL 18, SILVER PLATED		21
4			SCR, MACH FLH, SLOT DRIVE, 4-40 X .50", SSL 18, SILVER PLATED		20
8			SCR, MACH, SCH CAP, 4-40 X .50", SSL 18, VENTED, SILVER PLATED		19
8			SCR, MACH FLH, SLOT DRIVE, 4-40 X .19", SSL 18, SILVER PLATED		18
1	SAA10-500036-AA		BRACKET, LIFTING		17
1			SHIELD, REAR		16
1			SHIELD, FRONT LEFT		15
2			SHIELD, SIDE		14
2	SAA10-500044-AA		SHIELD, TOP / BOTTOM		13
1			SHIELD, FRONT RIGHT		12
1			CURVED IMAGE PLATE GUIDE, LOWER		11
1			CURVED IMAGE PLATE GUIDE, UPPER		10
1			CURVED IMAGE PLATE HOLDER, ELECTRON		9
1			CURVED IMAGE PLATE HOLDER, PROTON		8
1			SLIT HOLDER		7
2			HALF SLIT		6
1			REAR PLATE		5
1			FRONT PLATE		4
4			PERMANENT MAGNET, 2" X 2" X 1/2"		3
2			SIDE PLATE		2
2			POLE PIECE		1

PARTS LIST

DRAWING NUMBER SAA10-500046-AA REV SH 1

EXPORT CONTROLLED

PER: U.S. DEPARTMENT OF COMMERCE: 13 CFR 799 / EGCN 3A01Ae.5.
U.S. DEPARTMENT OF STATE: SECTION XVI OF THE ITAR MUNITIONS LIST.
VIOLATIONS ARE SUBJECT TO PENALTY UNDER:
SECTION 11 OF THE EXPORT ADMINISTRATION ACT OF 1974
SECTION 38 OF THE ARMS EXPORT CONTROL ACT.

CLASSIFICATION: UNCLASSIFIED

THIS DRAWING WAS CREATED BY THE LAWRENCE LIVERMORE NATIONAL SECURITY, LLC (LLNS) WHICH OPERATES LAWRENCE LIVERMORE NATIONAL LABORATORY (LLNL) FOR THE U.S. DEPARTMENT OF ENERGY UNDER CONTRACT NO. DE-AC52-07NA27344. ANY REPRODUCTION, DISSEMINATION AND/OR FABRICATION IS PROHIBITED WITHOUT THE PERMISSION OF COGNIZANT LLNS PERSONNEL.

INCH
THIRD ANGLE PROJECTION

UNLESS OTHERWISE SPECIFIED DIMENSIONS ARE IN INCHES
TOLERANCES ARE:
DECIMALS +/- N/A ANGLES +/- N/A
DO NOT SCALE THIS DRAWING

NEXT ASSY USED ON
APPLICATIONS

CONTRACT NO.

APPROVALS		DATE
ORIGINATOR	CHEN33	02/01/10
DRAWN	SACULLA1	03/29/10
CHECKED		
APPROVED	CHEN33	
ENGINEERING GROUP	PLE/TRED	DWG LEVEL 1

LAWRENCE LIVERMORE NATIONAL LABORATORY
LAWRENCE LIVERMORE NATIONAL SECURITY - LLC

TITLE
EPPS
SPECTROMETER ASSEMBLY

SIZE D | CAGE CODE 14067 | DWG NO SAA10-500046-AA | REV
SCALE NONE | SHEET 1 OF 1

CLASSIFICATION: UNCLASSIFIED

PRO/DESKTOP DRAWING ASSEMBLY_EPPS_SPECTROMETER.DRA MODEL: ELECTRON PROTON POSITRON SPECTROMETER

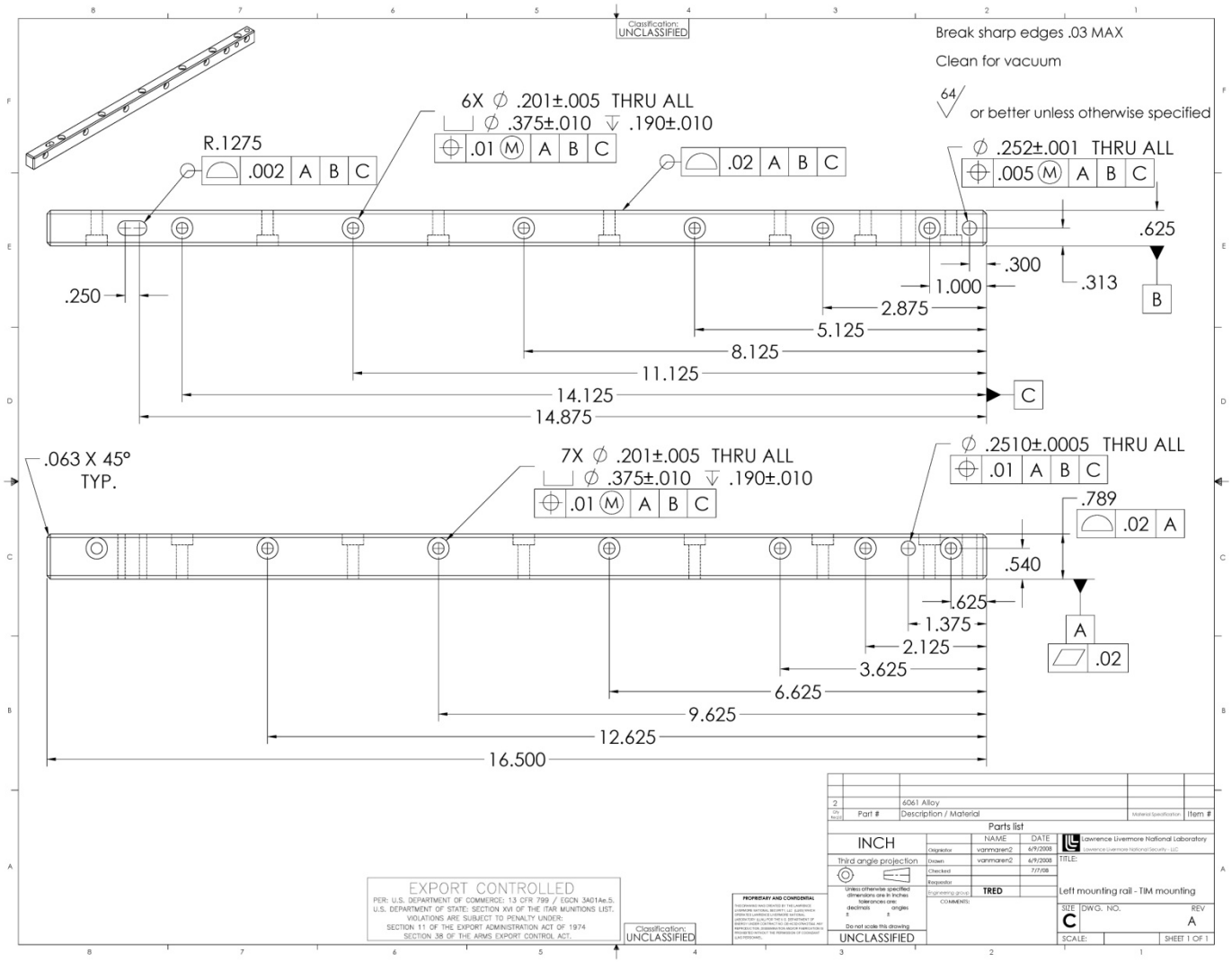
Classification: UNCLASSIFIED
Break sharp edges .03 MAX
Clean for vacuum
64 or better unless otherwise specified
6X ∅ .201±.005 THRU ALL
⌴ ∅ .375±.010 ↧ .190±.010
.01 M A B C
R.1275
.002 A B C
.02 A B C
∅ .252±.001 THRU ALL
.005 M A B C
.625
.300
.313
B
.250
1.000
2.875
5.125
8.125
11.125
14.125
14.875
C
.063 X 45° TYP.
7X ∅ .201±.005 THRU ALL
⌴ ∅ .375±.010 ↧ .190±.010
.01 M A B C
∅ .2510±.0005 THRU ALL
.01 A B C
.789
.02 A
.540
A
.02
.625
1.375
2.125
3.625
6.625
9.625
12.625
16.500
Parts list
Part # | Description / Material | Material Specification | Item #
6061 Alloy
INCH
Third angle projection
Unless otherwise specified dimensions are in inches
tolerances are:
decimals ± angles ±
Do not scale this drawing
UNCLASSIFIED
NAME DATE
Originator vanmaren2 6/9/2008
Drawn vanmaren2 6/9/2008
Checked 7/7/08
Responsible
Engineering group TRED
COMMENTS:
Lawrence Livermore National Laboratory
Lawrence Livermore National Security - LLC
TITLE:
Left mounting rail - TIM mounting
SIZE C
DWG. NO.
REV A
SCALE:
SHEET 1 OF 1
EXPORT CONTROLLED
PER: U.S. DEPARTMENT OF COMMERCE: 13 CFR 799 / EGCN 3A01Ae.5.
U.S. DEPARTMENT OF STATE: SECTION XVI OF THE ITAR MUNITIONS LIST.
VIOLATIONS ARE SUBJECT TO PENALTY UNDER:
SECTION 11 OF THE EXPORT ADMINISTRATION ACT OF 1974
SECTION 38 OF THE ARMS EXPORT CONTROL ACT.
Classification: UNCLASSIFIED
PROPRIETARY AND CONFIDENTIAL

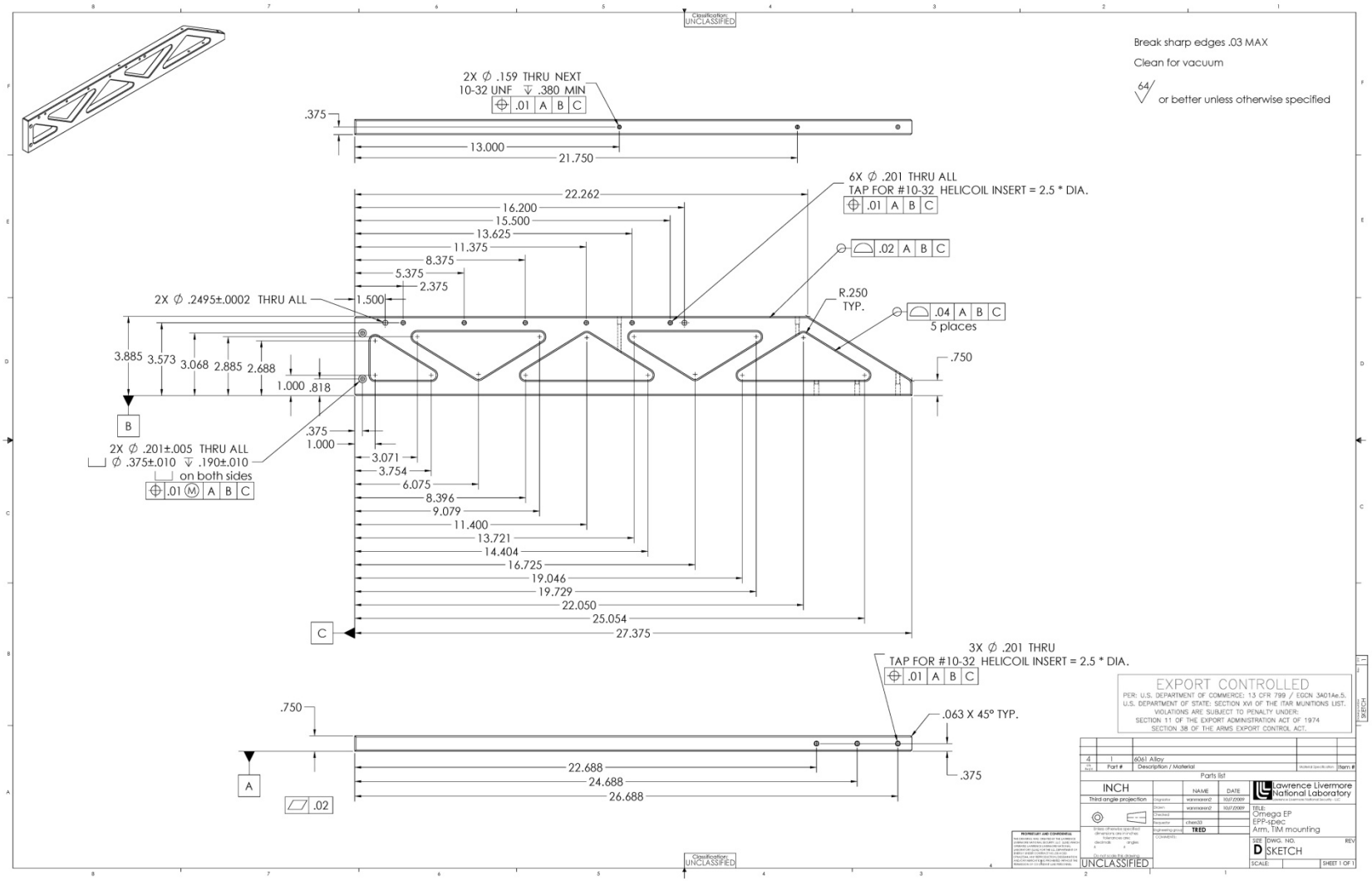
Break sharp edges .03 MAX
Clean for vacuum
64 or better unless otherwise specified
2X Ø .159 THRU NEXT
10-32 UNF ↧ .380 MIN
.01 A B C
.375
13.000
21.750
6X Ø .201 THRU ALL
TAP FOR #10-32 HELICOIL INSERT = 2.5 * DIA.
.01 A B C
22.262
16.200
15.500
13.625
11.375
8.375
5.375
2.375
1.500
.02 A B C
2X Ø .2495±.0002 THRU ALL
R.250
TYP.
.04 A B C
5 places
3.885
3.573
3.068
2.885
2.688
1.000
.818
.750
B
.375
1.000
2X Ø .201±.005 THRU ALL
Ø .375±.010 ↧ .190±.010
on both sides
.01 M A B C
3.071
3.754
6.075
8.396
9.079
11.400
13.721
14.404
16.725
19.046
19.729
22.050
25.054
27.375
C
3X Ø .201 THRU
TAP FOR #10-32 HELICOIL INSERT = 2.5 * DIA.
.01 A B C
.750
.063 X 45° TYP.
.375
22.688
24.688
26.688
A
.02
EXPORT CONTROLLED
PER: U.S. DEPARTMENT OF COMMERCE: 15 CFR 799 / ECCN 3A01Ae.5.
U.S. DEPARTMENT OF STATE: SECTION XVI OF THE ITAR MUNITIONS LIST.
VIOLATIONS ARE SUBJECT TO PENALTY UNDER:
SECTION 11 OF THE EXPORT ADMINISTRATION ACT OF 1974
SECTION 38 OF THE ARMS EXPORT CONTROL ACT.
4 1 6061 Alloy
Qty REQ Part # Description / Material Material Specification Item #
Parts list
INCH
Third angle projection
NAME DATE
vanmaanen2 10/7/2009
vanmaanen2 10/7/2009
chen33
TRED
Lawrence Livermore National Laboratory
TITLE:
Omega EP
EPP-spec
Arm, TIM mounting
SIZE DWG. NO. REV
D SKETCH
SCALE: SHEET 1 OF 1
UNCLASSIFIED
Classification:
UNCLASSIFIED

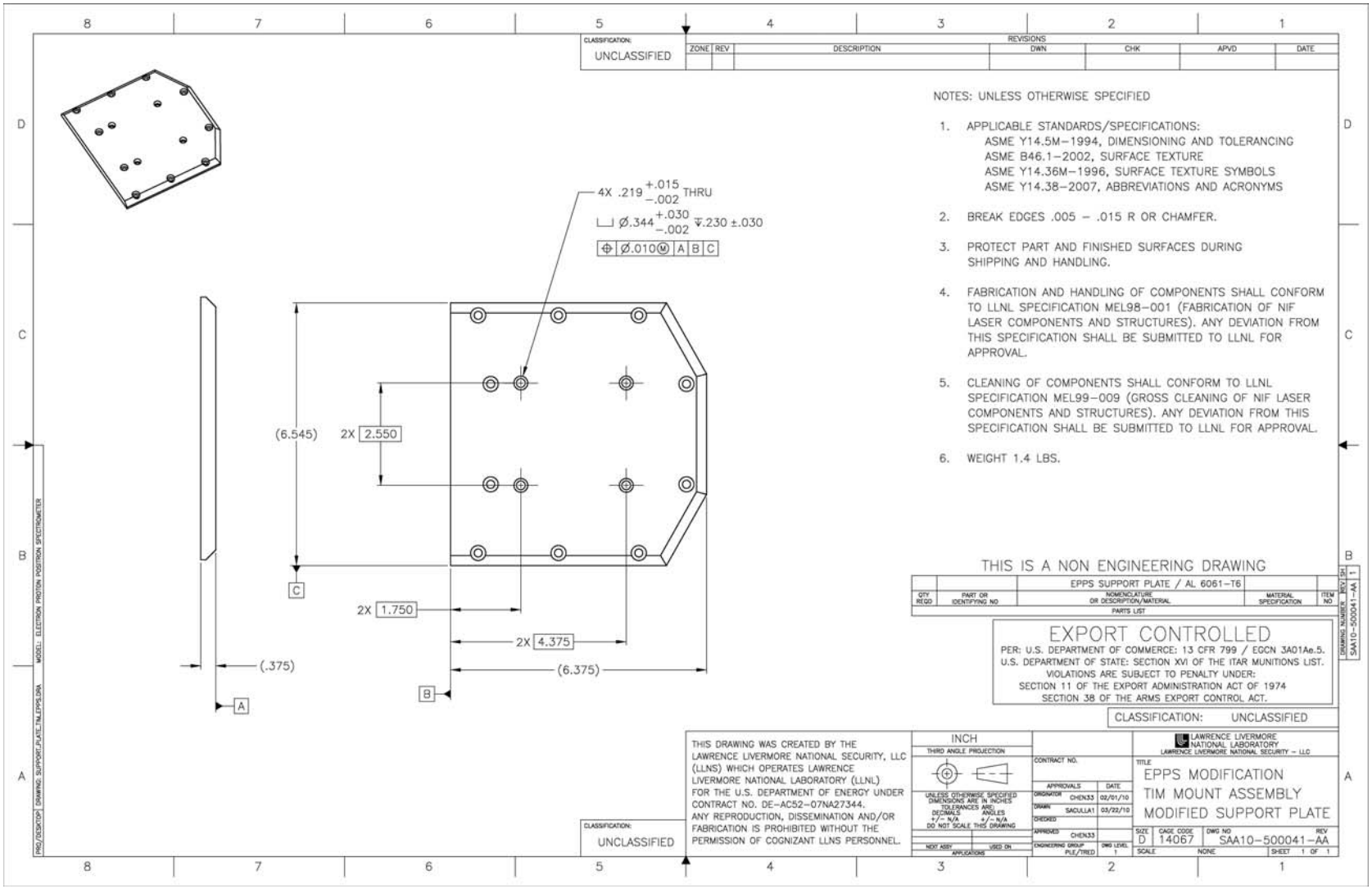
CLASSIFICATION: UNCLASSIFIED
REVISIONS
ZONE REV DESCRIPTION DWN CHK APVD DATE
NOTES: UNLESS OTHERWISE SPECIFIED
1. APPLICABLE STANDARDS/SPECIFICATIONS:
ASME Y14.5M-1994, DIMENSIONING AND TOLERANCING
ASME B46.1-2002, SURFACE TEXTURE
ASME Y14.36M-1996, SURFACE TEXTURE SYMBOLS
ASME Y14.38-2007, ABBREVIATIONS AND ACRONYMS
2. BREAK EDGES .005 - .015 R OR CHAMFER.
3. PROTECT PART AND FINISHED SURFACES DURING SHIPPING AND HANDLING.
4. FABRICATION AND HANDLING OF COMPONENTS SHALL CONFORM TO LLNL SPECIFICATION MEL98-001 (FABRICATION OF NIF LASER COMPONENTS AND STRUCTURES). ANY DEVIATION FROM THIS SPECIFICATION SHALL BE SUBMITTED TO LLNL FOR APPROVAL.
5. CLEANING OF COMPONENTS SHALL CONFORM TO LLNL SPECIFICATION MEL99-009 (GROSS CLEANING OF NIF LASER COMPONENTS AND STRUCTURES). ANY DEVIATION FROM THIS SPECIFICATION SHALL BE SUBMITTED TO LLNL FOR APPROVAL.
6. WEIGHT 1.4 LBS.
4X .219 +.015 -.002 THRU
Ø.344 +.030 -.002 ↧.230 ±.030
Ø.010Ⓜ A B C
(6.545)
2X 2.550
2X 1.750
2X 4.375
(6.375)
(.375)
A
B
C
THIS IS A NON ENGINEERING DRAWING
EPPS SUPPORT PLATE / AL 6061-T6
QTY REQD
PART OR IDENTIFYING NO
NOMENCLATURE OR DESCRIPTION/MATERIAL
MATERIAL SPECIFICATION
ITEM NO.
PARTS LIST
EXPORT CONTROLLED
PER: U.S. DEPARTMENT OF COMMERCE: 13 CFR 799 / EGCN 3A01Ae.5.
U.S. DEPARTMENT OF STATE: SECTION XVI OF THE ITAR MUNITIONS LIST.
VIOLATIONS ARE SUBJECT TO PENALTY UNDER:
SECTION 11 OF THE EXPORT ADMINISTRATION ACT OF 1974
SECTION 38 OF THE ARMS EXPORT CONTROL ACT.
CLASSIFICATION: UNCLASSIFIED
THIS DRAWING WAS CREATED BY THE LAWRENCE LIVERMORE NATIONAL SECURITY, LLC (LLNS) WHICH OPERATES LAWRENCE LIVERMORE NATIONAL LABORATORY (LLNL) FOR THE U.S. DEPARTMENT OF ENERGY UNDER CONTRACT NO. DE-AC52-07NA27344. ANY REPRODUCTION, DISSEMINATION AND/OR FABRICATION IS PROHIBITED WITHOUT THE PERMISSION OF COGNIZANT LLNS PERSONNEL.
INCH
THIRD ANGLE PROJECTION
UNLESS OTHERWISE SPECIFIED DIMENSIONS ARE IN INCHES TOLERANCES ARE: DECIMALS +/- N/A ANGLES +/- N/A
DO NOT SCALE THIS DRAWING
NEXT ASSY USED ON
APPLICATIONS
CONTRACT NO.
APPROVALS DATE
ORIGINATOR CHEN33 02/01/10
DRAWN SACULLA1 03/22/10
CHECKED
APPROVED CHEN33
ENGINEERING GROUP PLE/TRED
DWG LEVEL 1
LAWRENCE LIVERMORE NATIONAL LABORATORY
LAWRENCE LIVERMORE NATIONAL SECURITY - LLC
TITLE
EPPS MODIFICATION
TIM MOUNT ASSEMBLY
MODIFIED SUPPORT PLATE
SIZE D
CAGE CODE 14067
DWG NO SAA10-500041-AA
REV
SCALE NONE
SHEET 1 OF 1
DRAWING NUMBER SAA10-500041-AA
REV
SH 1
PRO/DESKTOP DRAWING: SUPPORT_PLATE_NLEPPS.DRA MODEL: ELECTRON PROTON POSITRON SPECTROMETER

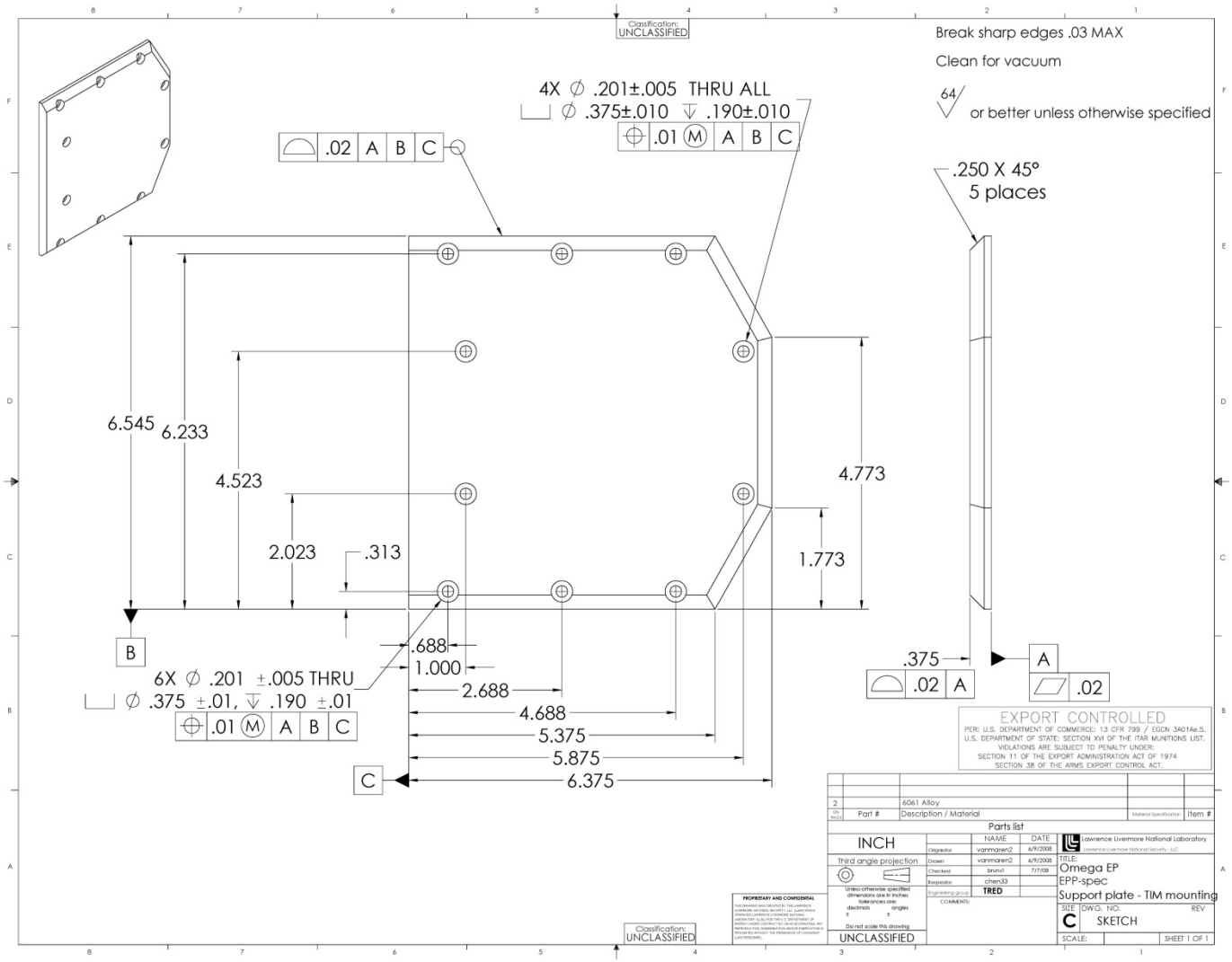
Classification: UNCLASSIFIED
Break sharp edges .03 MAX
Clean for vacuum
64 or better unless otherwise specified
4X ∅ .201±.005 THRU ALL
⌴ ∅ .375±.010 ↧ .190±.010
.01 Ⓜ A B C
.02 A B C
.250 X 45°
5 places
6.545
6.233
4.523
2.023
.313
4.773
1.773
B
.688
1.000
2.688
4.688
5.375
5.875
6.375
C
6X ∅ .201 ±.005 THRU
⌴ ∅ .375 ±.01, ↧ .190 ±.01
.01 Ⓜ A B C
.375
.02 A
A
.02
EXPORT CONTROLLED
PER: U.S. DEPARTMENT OF COMMERCE: 13 CFR 799 / ECCN 3A01Ae.5.
U.S. DEPARTMENT OF STATE: SECTION XVI OF THE ITAR MUNITIONS LIST.
VIOLATIONS ARE SUBJECT TO PENALTY UNDER:
SECTION 11 OF THE EXPORT ADMINISTRATION ACT OF 1974
SECTION 38 OF THE ARMS EXPORT CONTROL ACT.
2 6061 Alloy
QTY REQ'D Part # Description / Material Material Specification Item #
Parts list
INCH
Third angle projection
Unless otherwise specified dimensions are in inches
tolerances are:
decimals ± angles ±
Do not scale this drawing
UNCLASSIFIED
NAME DATE
Originator vanmaren2 6/9/2008
Drawn vanmaren2 6/9/2008
Checked bruno1 7/7/08
Responsible chen33
Engineering group TRED
COMMENTS:
Lawrence Livermore National Laboratory
Lawrence Livermore National Security - LLC
TITLE:
Omega EP
EPP-spec
Support plate - TIM mounting
SIZE C
DWG. NO. SKETCH
REV
SCALE:
SHEET 1 OF 1
PROPRIETARY AND CONFIDENTIAL
Classification: UNCLASSIFIED

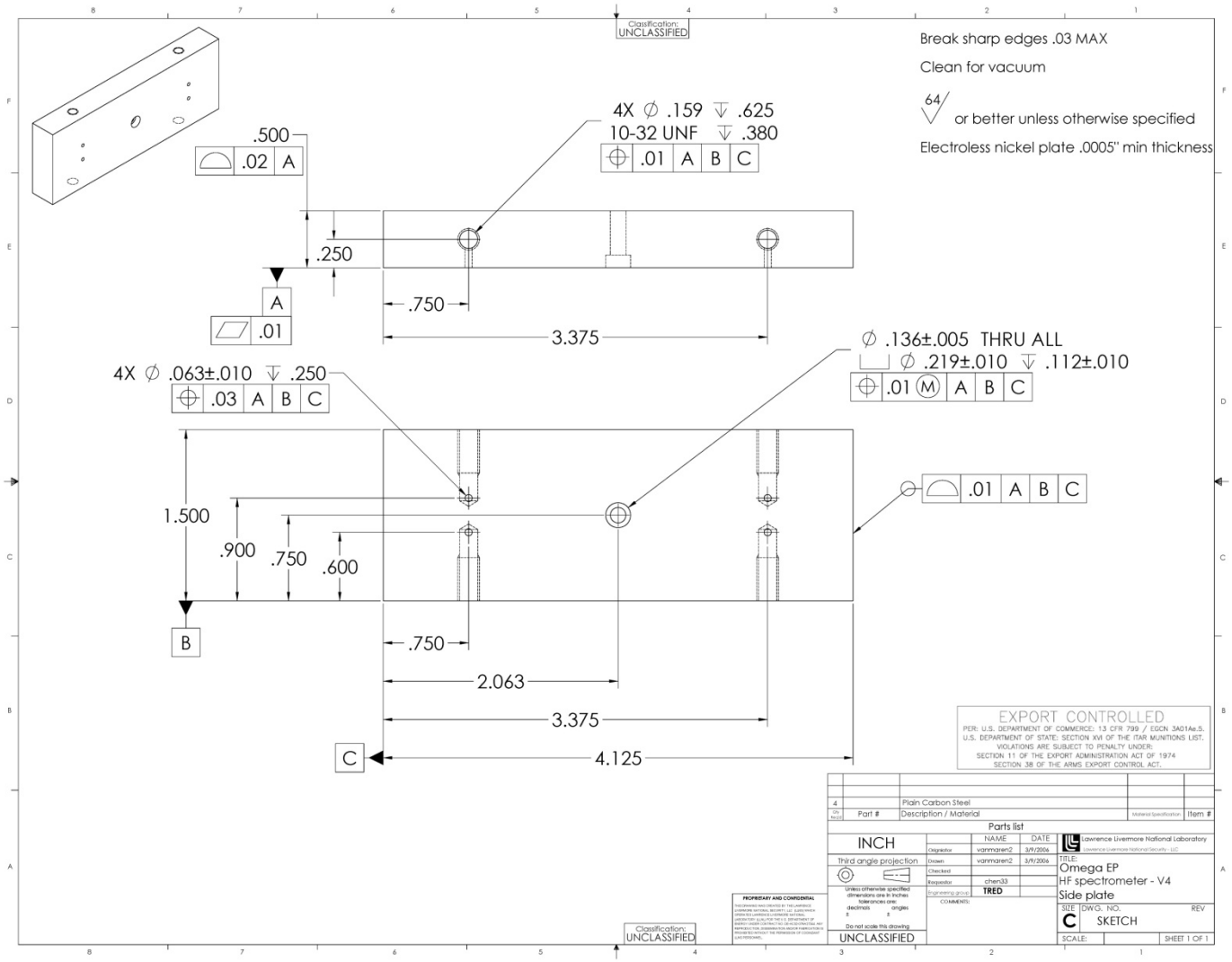
Classification: UNCLASSIFIED
Break sharp edges .03 MAX
Clean for vacuum
64 or better unless otherwise specified
Electroless nickel plate .0005" min thickness
4X ∅ .159 ↧ .625
10-32 UNF ↧ .380
.01 A B C
.500
.02 A
.250
A
.01
.750
3.375
∅ .136±.005 THRU ALL
⌴ ∅ .219±.010 ↧ .112±.010
.01 M A B C
4X ∅ .063±.010 ↧ .250
.03 A B C
.01 A B C
1.500
.900
.750
.600
B
.750
2.063
3.375
C
4.125
EXPORT CONTROLLED
PER: U.S. DEPARTMENT OF COMMERCE: 13 CFR 799 / ECCN 3A01Ae.5.
U.S. DEPARTMENT OF STATE: SECTION XVI OF THE ITAR MUNITIONS LIST.
VIOLATIONS ARE SUBJECT TO PENALTY UNDER:
SECTION 11 OF THE EXPORT ADMINISTRATION ACT OF 1974
SECTION 38 OF THE ARMS EXPORT CONTROL ACT.
4 Plain Carbon Steel
QTY REQ'D Part # Description / Material Material Specification Item #
Parts list
INCH
Third angle projection
Unless otherwise specified dimensions are in inches
tolerances are:
decimals ± angles ±
Do not scale this drawing
UNCLASSIFIED
NAME DATE
Originator vanmaren2 3/9/2006
Drawn vanmaren2 3/9/2006
Checked
Responsible chen33
Engineering group TRED
COMMENTS:
Lawrence Livermore National Laboratory
Lawrence Livermore National Security - LLC
TITLE:
Omega EP
HF spectrometer - V4
Side plate
SIZE C
DWG. NO. SKETCH
REV
SCALE:
SHEET 1 OF 1
PROPRIETARY AND CONFIDENTIAL
Classification: UNCLASSIFIED

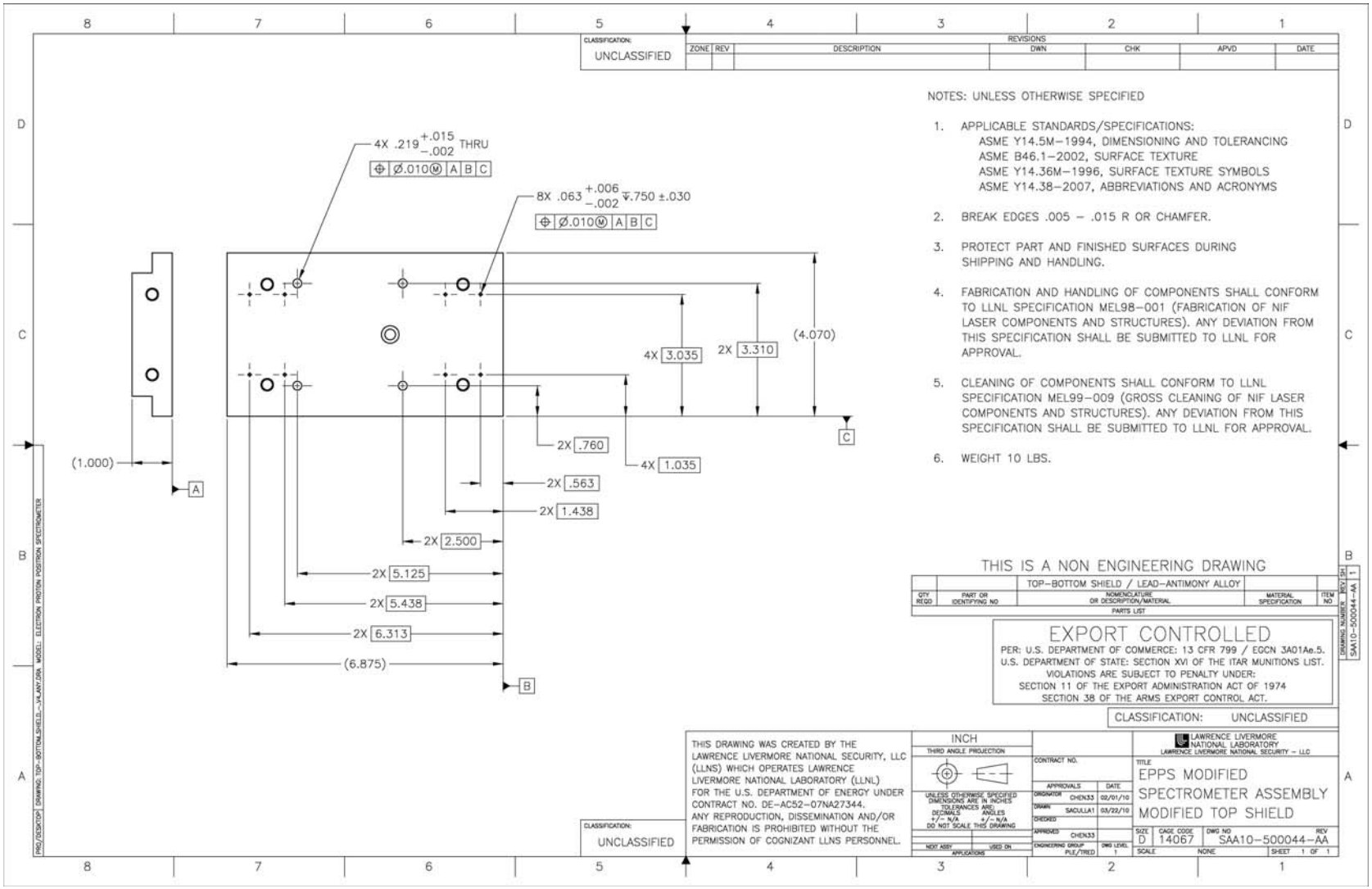

CLASSIFICATION: UNCLASSIFIED
REVISIONS
ZONE REV DESCRIPTION DWN CHK APVD DATE
NOTES: UNLESS OTHERWISE SPECIFIED
1. APPLICABLE STANDARDS/SPECIFICATIONS:
ASME Y14.5M-1994, DIMENSIONING AND TOLERANCING
ASME B46.1-2002, SURFACE TEXTURE
ASME Y14.36M-1996, SURFACE TEXTURE SYMBOLS
ASME Y14.38-2007, ABBREVIATIONS AND ACRONYMS
2. BREAK EDGES .005 - .015 R OR CHAMFER.
3. PROTECT PART AND FINISHED SURFACES DURING SHIPPING AND HANDLING.
4. FABRICATION AND HANDLING OF COMPONENTS SHALL CONFORM TO LLNL SPECIFICATION MEL98-001 (FABRICATION OF NIF LASER COMPONENTS AND STRUCTURES). ANY DEVIATION FROM THIS SPECIFICATION SHALL BE SUBMITTED TO LLNL FOR APPROVAL.
5. CLEANING OF COMPONENTS SHALL CONFORM TO LLNL SPECIFICATION MEL99-009 (GROSS CLEANING OF NIF LASER COMPONENTS AND STRUCTURES). ANY DEVIATION FROM THIS SPECIFICATION SHALL BE SUBMITTED TO LLNL FOR APPROVAL.
6. WEIGHT 10 LBS.
4X .219 +.015 -.002 THRU
Ø.010 Ⓜ A B C
8X .063 +.006 -.002 ↧.750 ±.030
Ø.010 Ⓜ A B C
4X 3.035
2X 3.310
(4.070)
2X .760
4X 1.035
2X .563
2X 1.438
2X 2.500
2X 5.125
2X 5.438
2X 6.313
(6.875)
(1.000)
A
B
C
THIS IS A NON ENGINEERING DRAWING
TOP-BOTTOM SHIELD / LEAD-ANTIMONY ALLOY
QTY REQD
PART OR IDENTIFYING NO
NOMENCLATURE OR DESCRIPTION/MATERIAL
MATERIAL SPECIFICATION
ITEM NO
PARTS LIST
EXPORT CONTROLLED
PER: U.S. DEPARTMENT OF COMMERCE: 13 CFR 799 / EGCN 3A01Ae.5.
U.S. DEPARTMENT OF STATE: SECTION XVI OF THE ITAR MUNITIONS LIST.
VIOLATIONS ARE SUBJECT TO PENALTY UNDER:
SECTION 11 OF THE EXPORT ADMINISTRATION ACT OF 1974
SECTION 38 OF THE ARMS EXPORT CONTROL ACT.
CLASSIFICATION: UNCLASSIFIED
THIS DRAWING WAS CREATED BY THE LAWRENCE LIVERMORE NATIONAL SECURITY, LLC (LLNS) WHICH OPERATES LAWRENCE LIVERMORE NATIONAL LABORATORY (LLNL) FOR THE U.S. DEPARTMENT OF ENERGY UNDER CONTRACT NO. DE-AC52-07NA27344. ANY REPRODUCTION, DISSEMINATION AND/OR FABRICATION IS PROHIBITED WITHOUT THE PERMISSION OF COGNIZANT LLNS PERSONNEL.
INCH
THIRD ANGLE PROJECTION
UNLESS OTHERWISE SPECIFIED DIMENSIONS ARE IN INCHES TOLERANCES ARE: DECIMALS +/- N/A ANGLES +/- N/A DO NOT SCALE THIS DRAWING
NEXT ASSY USED ON
APPLICATIONS
CONTRACT NO.
APPROVALS DATE
ORIGINATOR CHEN33 02/01/10
DRAWN SACULLA1 03/22/10
CHECKED
APPROVED CHEN33
ENGINEERING GROUP PLE/TRED
DWG LEVEL 1
LAWRENCE LIVERMORE NATIONAL LABORATORY
LAWRENCE LIVERMORE NATIONAL SECURITY - LLC
TITLE
EPPS MODIFIED SPECTROMETER ASSEMBLY MODIFIED TOP SHIELD
SIZE D
CAGE CODE 14067
DWG NO SAA10-500044-AA
REV
SCALE NONE
SHEET 1 OF 1
CLASSIFICATION: UNCLASSIFIED
DRAWING NUMBER SAA10-500044-AA
REV SH 1
PRO/DESKTOP DRAWING: TOP-BOTTOM_SHIELD_...V4_ANY.DRA MODEL: ELECTRON PROTON POSITRON SPECTROMETER

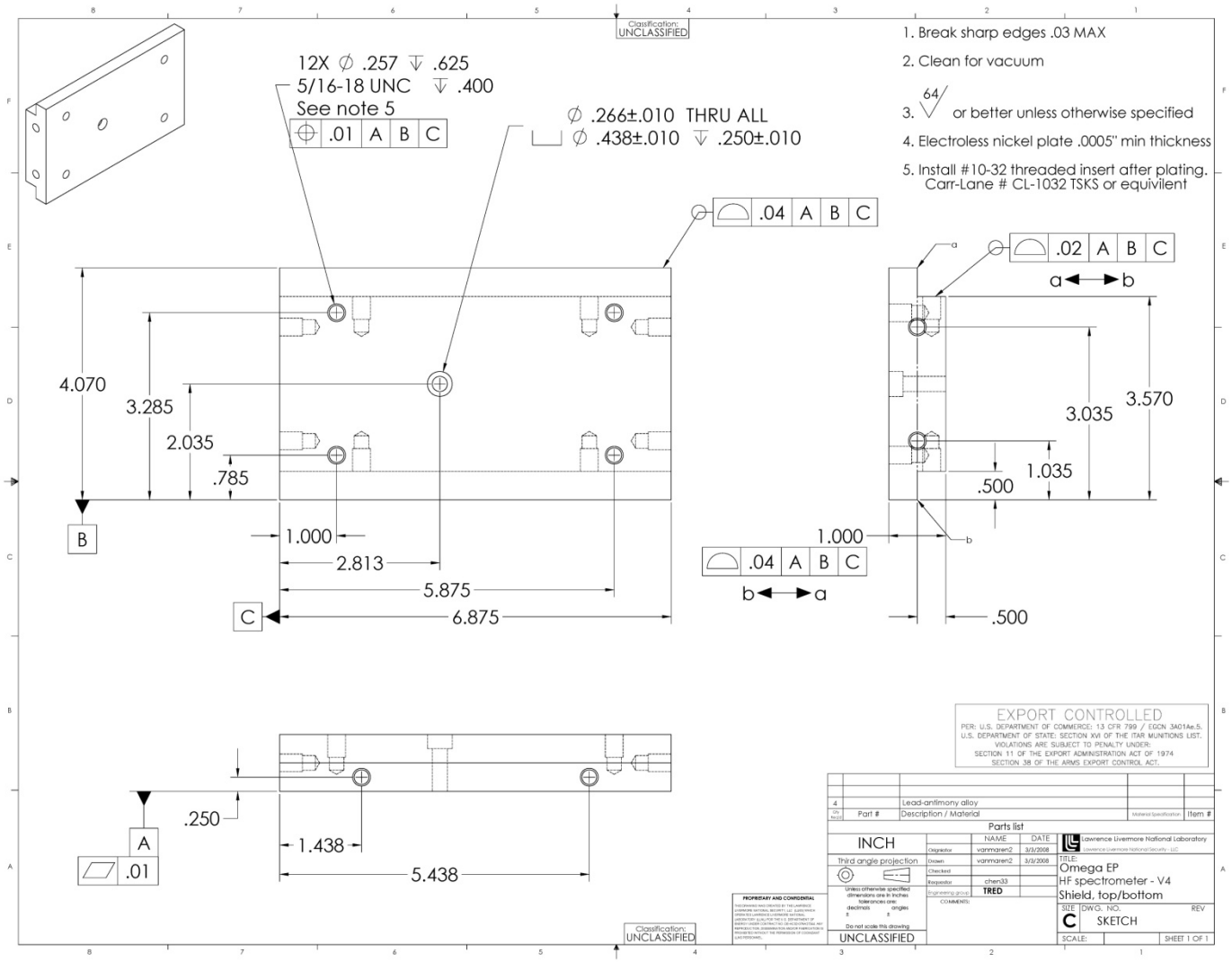
Classification: UNCLASSIFIED
1. Break sharp edges .03 MAX
2. Clean for vacuum
3. 64 or better unless otherwise specified
4. Electroless nickel plate .0005" min thickness
5. Install #10-32 threaded insert after plating. Carr-Lane # CL-1032 TSKS or equivilent
12X ∅ .257 ↧ .625
5/16-18 UNC ↧ .400
See note 5
.01 A B C
∅ .266±.010 THRU ALL
∅ .438±.010 ↧ .250±.010
.04 A B C
.02 A B C
a ◄► b
4.070
3.285
2.035
.785
B
1.000
2.813
5.875
6.875
C
3.035
3.570
1.035
.500
1.000
.04 A B C
b ◄► a
.500
.250
A
.01
1.438
5.438
EXPORT CONTROLLED
PER: U.S. DEPARTMENT OF COMMERCE: 13 CFR 799 / ECCN 3A01Ae.5.
U.S. DEPARTMENT OF STATE: SECTION XVI OF THE ITAR MUNITIONS LIST.
VIOLATIONS ARE SUBJECT TO PENALTY UNDER:
SECTION 11 OF THE EXPORT ADMINISTRATION ACT OF 1974
SECTION 38 OF THE ARMS EXPORT CONTROL ACT.
4 Lead-antimony alloy
Qty Part # Description / Material Material Specification Item #
Parts list
INCH
Third angle projection
Unless otherwise specified dimensions are in inches
tolerances are:
decimals ± angles ±
Do not scale this drawing
UNCLASSIFIED
NAME DATE
Originator vanmaren2 3/3/2008
Drawn vanmaren2 3/3/2008
Checked
Responsible chen33
Engineering group TRED
COMMENTS:
Lawrence Livermore National Laboratory
TITLE:
Omega EP
HF spectrometer - V4
Shield, top/bottom
SIZE C
DWG. NO. SKETCH
REV
SCALE:
SHEET 1 OF 1
PROPRIETARY AND CONFIDENTIAL
Classification: UNCLASSIFIED

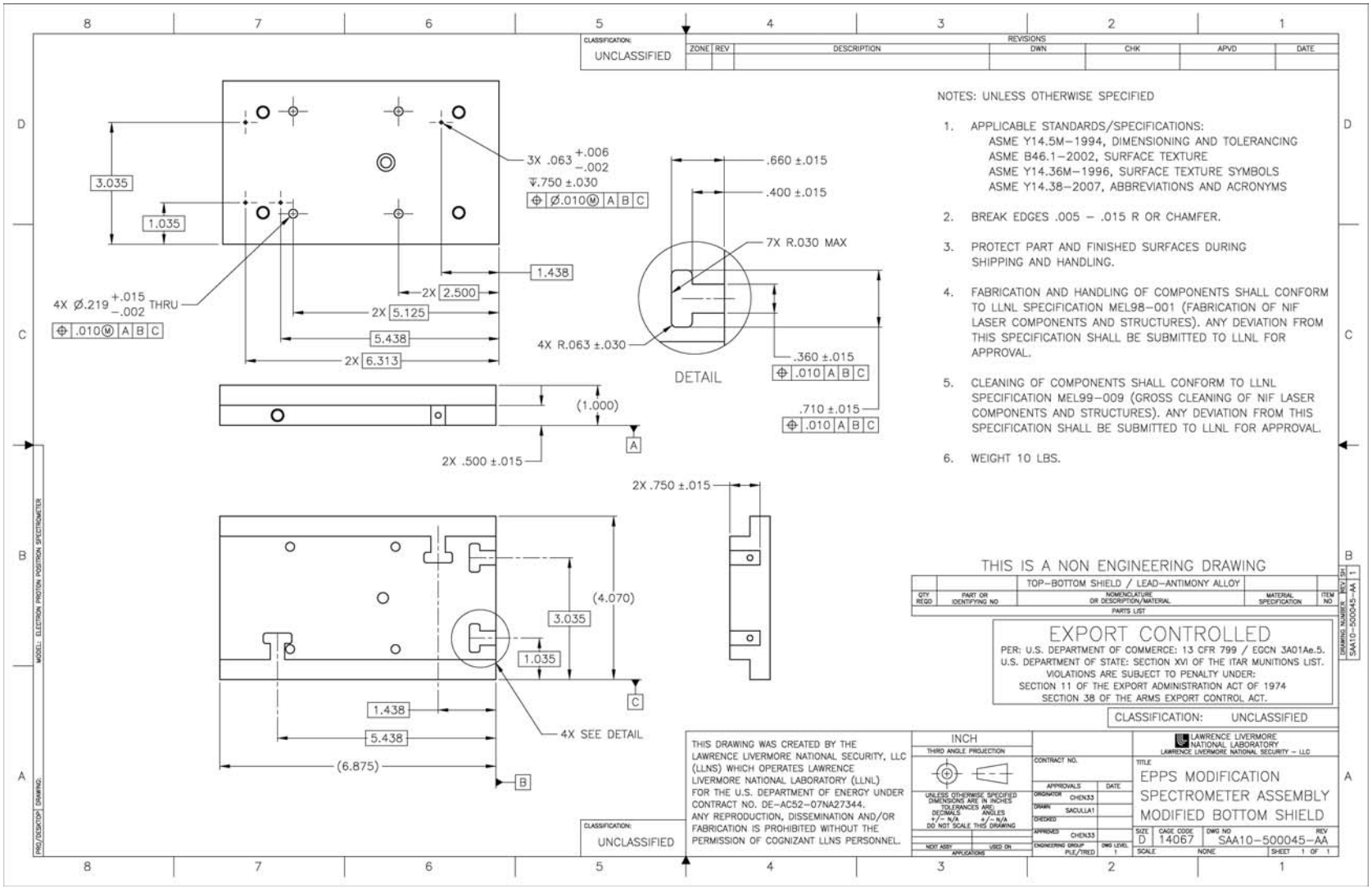
CLASSIFICATION: UNCLASSIFIED
REVISIONS
ZONE REV DESCRIPTION DWN CHK APVD DATE
3.035
1.035
3X .063 +.006 −.002
⌀.750 ±.030
⌀.010Ⓜ A B C
1.438
2X 2.500
2X 5.125
5.438
2X 6.313
4X Ø.219 +.015 −.002 THRU
.010Ⓜ A B C
.660 ±.015
.400 ±.015
7X R.030 MAX
4X R.063 ±.030
DETAIL
.360 ±.015
.010 A B C
.710 ±.015
.010 A B C
(1.000)
2X .500 ±.015
2X .750 ±.015
(4.070)
3.035
1.035
1.438
5.438
(6.875)
4X SEE DETAIL
NOTES: UNLESS OTHERWISE SPECIFIED
1. APPLICABLE STANDARDS/SPECIFICATIONS:
ASME Y14.5M−1994, DIMENSIONING AND TOLERANCING
ASME B46.1−2002, SURFACE TEXTURE
ASME Y14.36M−1996, SURFACE TEXTURE SYMBOLS
ASME Y14.38−2007, ABBREVIATIONS AND ACRONYMS
2. BREAK EDGES .005 − .015 R OR CHAMFER.
3. PROTECT PART AND FINISHED SURFACES DURING SHIPPING AND HANDLING.
4. FABRICATION AND HANDLING OF COMPONENTS SHALL CONFORM TO LLNL SPECIFICATION MEL98−001 (FABRICATION OF NIF LASER COMPONENTS AND STRUCTURES). ANY DEVIATION FROM THIS SPECIFICATION SHALL BE SUBMITTED TO LLNL FOR APPROVAL.
5. CLEANING OF COMPONENTS SHALL CONFORM TO LLNL SPECIFICATION MEL99−009 (GROSS CLEANING OF NIF LASER COMPONENTS AND STRUCTURES). ANY DEVIATION FROM THIS SPECIFICATION SHALL BE SUBMITTED TO LLNL FOR APPROVAL.
6. WEIGHT 10 LBS.
THIS IS A NON ENGINEERING DRAWING
TOP−BOTTOM SHIELD / LEAD−ANTIMONY ALLOY
QTY REQD
PART OR IDENTIFYING NO
NOMENCLATURE OR DESCRIPTION/MATERIAL
MATERIAL SPECIFICATION
ITEM NO.
PARTS LIST
EXPORT CONTROLLED
PER: U.S. DEPARTMENT OF COMMERCE: 13 CFR 799 / EGCN 3A01Ae.5.
U.S. DEPARTMENT OF STATE: SECTION XVI OF THE ITAR MUNITIONS LIST.
VIOLATIONS ARE SUBJECT TO PENALTY UNDER:
SECTION 11 OF THE EXPORT ADMINISTRATION ACT OF 1974
SECTION 38 OF THE ARMS EXPORT CONTROL ACT.
CLASSIFICATION: UNCLASSIFIED
DRAWING NUMBER REV SH
SAA10−500045−AA 1
MODEL: ELECTRON PROTON POSITRON SPECTROMETER
PRO/DESKTOP DRAWING
THIS DRAWING WAS CREATED BY THE LAWRENCE LIVERMORE NATIONAL SECURITY, LLC (LLNS) WHICH OPERATES LAWRENCE LIVERMORE NATIONAL LABORATORY (LLNL) FOR THE U.S. DEPARTMENT OF ENERGY UNDER CONTRACT NO. DE−AC52−07NA27344. ANY REPRODUCTION, DISSEMINATION AND/OR FABRICATION IS PROHIBITED WITHOUT THE PERMISSION OF COGNIZANT LLNS PERSONNEL.
INCH
THIRD ANGLE PROJECTION
UNLESS OTHERWISE SPECIFIED DIMENSIONS ARE IN INCHES TOLERANCES ARE: DECIMALS +/− N/A ANGLES +/− N/A
DO NOT SCALE THIS DRAWING
NEXT ASSY USED ON
APPLICATIONS
CONTRACT NO.
APPROVALS DATE
ORIGINATOR CHEN33
DRAWN SACULLA1
CHECKED
APPROVED CHEN33
ENGINEERING GROUP PLE/TRED
DWG LEVEL 1
LAWRENCE LIVERMORE NATIONAL LABORATORY
LAWRENCE LIVERMORE NATIONAL SECURITY − LLC
TITLE
EPPS MODIFICATION
SPECTROMETER ASSEMBLY
MODIFIED BOTTOM SHIELD
SIZE D
CAGE CODE 14067
DWG NO SAA10−500045−AA
REV
SCALE NONE
SHEET 1 OF 1

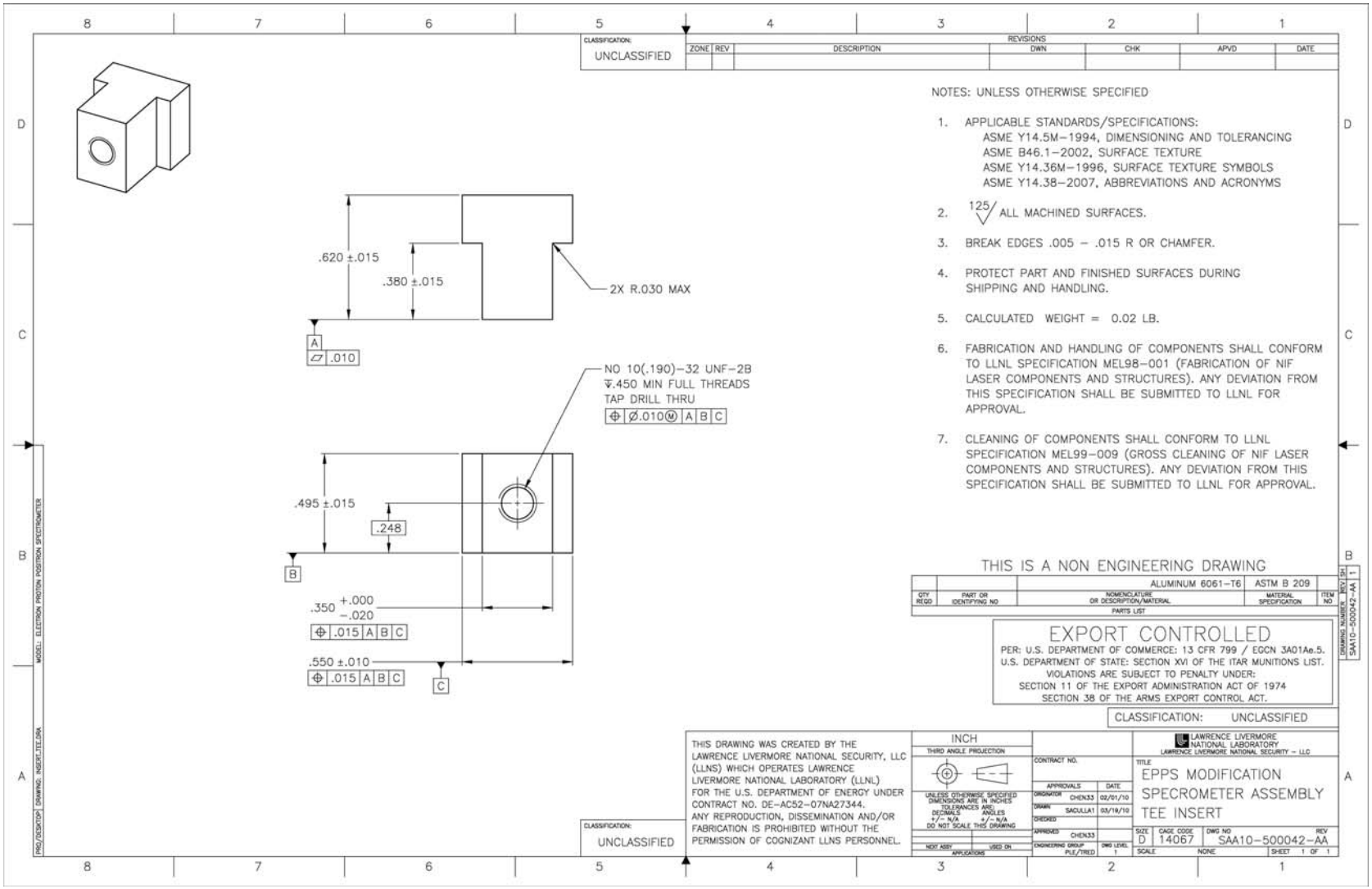
CLASSIFICATION: UNCLASSIFIED
REVISIONS
ZONE REV DESCRIPTION DWN CHK APVD DATE
NOTES: UNLESS OTHERWISE SPECIFIED
1. APPLICABLE STANDARDS/SPECIFICATIONS:
ASME Y14.5M-1994, DIMENSIONING AND TOLERANCING
ASME B46.1-2002, SURFACE TEXTURE
ASME Y14.36M-1996, SURFACE TEXTURE SYMBOLS
ASME Y14.38-2007, ABBREVIATIONS AND ACRONYMS
2. 125 ALL MACHINED SURFACES.
3. BREAK EDGES .005 - .015 R OR CHAMFER.
4. PROTECT PART AND FINISHED SURFACES DURING SHIPPING AND HANDLING.
5. CALCULATED WEIGHT = 0.02 LB.
6. FABRICATION AND HANDLING OF COMPONENTS SHALL CONFORM TO LLNL SPECIFICATION MEL98-001 (FABRICATION OF NIF LASER COMPONENTS AND STRUCTURES). ANY DEVIATION FROM THIS SPECIFICATION SHALL BE SUBMITTED TO LLNL FOR APPROVAL.
7. CLEANING OF COMPONENTS SHALL CONFORM TO LLNL SPECIFICATION MEL99-009 (GROSS CLEANING OF NIF LASER COMPONENTS AND STRUCTURES). ANY DEVIATION FROM THIS SPECIFICATION SHALL BE SUBMITTED TO LLNL FOR APPROVAL.
.620 ±.015
.380 ±.015
2X R.030 MAX
A
.010
NO 10(.190)-32 UNF-2B
↧.450 MIN FULL THREADS
TAP DRILL THRU
Ø.010 M A B C
.495 ±.015
.248
B
.350 +.000 -.020
.015 A B C
.550 ±.010
.015 A B C
C
THIS IS A NON ENGINEERING DRAWING
QTY REQD
PART OR IDENTIFYING NO
NOMENCLATURE OR DESCRIPTION/MATERIAL
MATERIAL SPECIFICATION
ITEM NO.
ALUMINUM 6061-T6
ASTM B 209
PARTS LIST
EXPORT CONTROLLED
PER: U.S. DEPARTMENT OF COMMERCE: 13 CFR 799 / EGCN 3A01Ae.5.
U.S. DEPARTMENT OF STATE: SECTION XVI OF THE ITAR MUNITIONS LIST.
VIOLATIONS ARE SUBJECT TO PENALTY UNDER:
SECTION 11 OF THE EXPORT ADMINISTRATION ACT OF 1974
SECTION 38 OF THE ARMS EXPORT CONTROL ACT.
CLASSIFICATION: UNCLASSIFIED
THIS DRAWING WAS CREATED BY THE LAWRENCE LIVERMORE NATIONAL SECURITY, LLC (LLNS) WHICH OPERATES LAWRENCE LIVERMORE NATIONAL LABORATORY (LLNL) FOR THE U.S. DEPARTMENT OF ENERGY UNDER CONTRACT NO. DE-AC52-07NA27344. ANY REPRODUCTION, DISSEMINATION AND/OR FABRICATION IS PROHIBITED WITHOUT THE PERMISSION OF COGNIZANT LLNS PERSONNEL.
INCH
THIRD ANGLE PROJECTION
UNLESS OTHERWISE SPECIFIED DIMENSIONS ARE IN INCHES TOLERANCES ARE: DECIMALS +/- N/A ANGLES +/- N/A
DO NOT SCALE THIS DRAWING
CONTRACT NO.
APPROVALS DATE
ORIGINATOR CHEN33 02/01/10
DRAWN SACULLA1 03/19/10
CHECKED
APPROVED CHEN33
ENGINEERING GROUP PLE/TRED
DWG LEVEL 1
NEXT ASSY USED ON
APPLICATIONS
LAWRENCE LIVERMORE NATIONAL LABORATORY
LAWRENCE LIVERMORE NATIONAL SECURITY - LLC
TITLE
EPPS MODIFICATION
SPECROMETER ASSEMBLY
TEE INSERT
SIZE D
CAGE CODE 14067
DWG NO SAA10-500042-AA
REV
SCALE NONE
SHEET 1 OF 1
DRAWING NUMBER SAA10-500042-AA
REV
SH 1
MODEL: ELECTRON PROTON POSITRON SPECTROMETER
PRO/DESKTOP DRAWING: INSERT-TEE.DRA

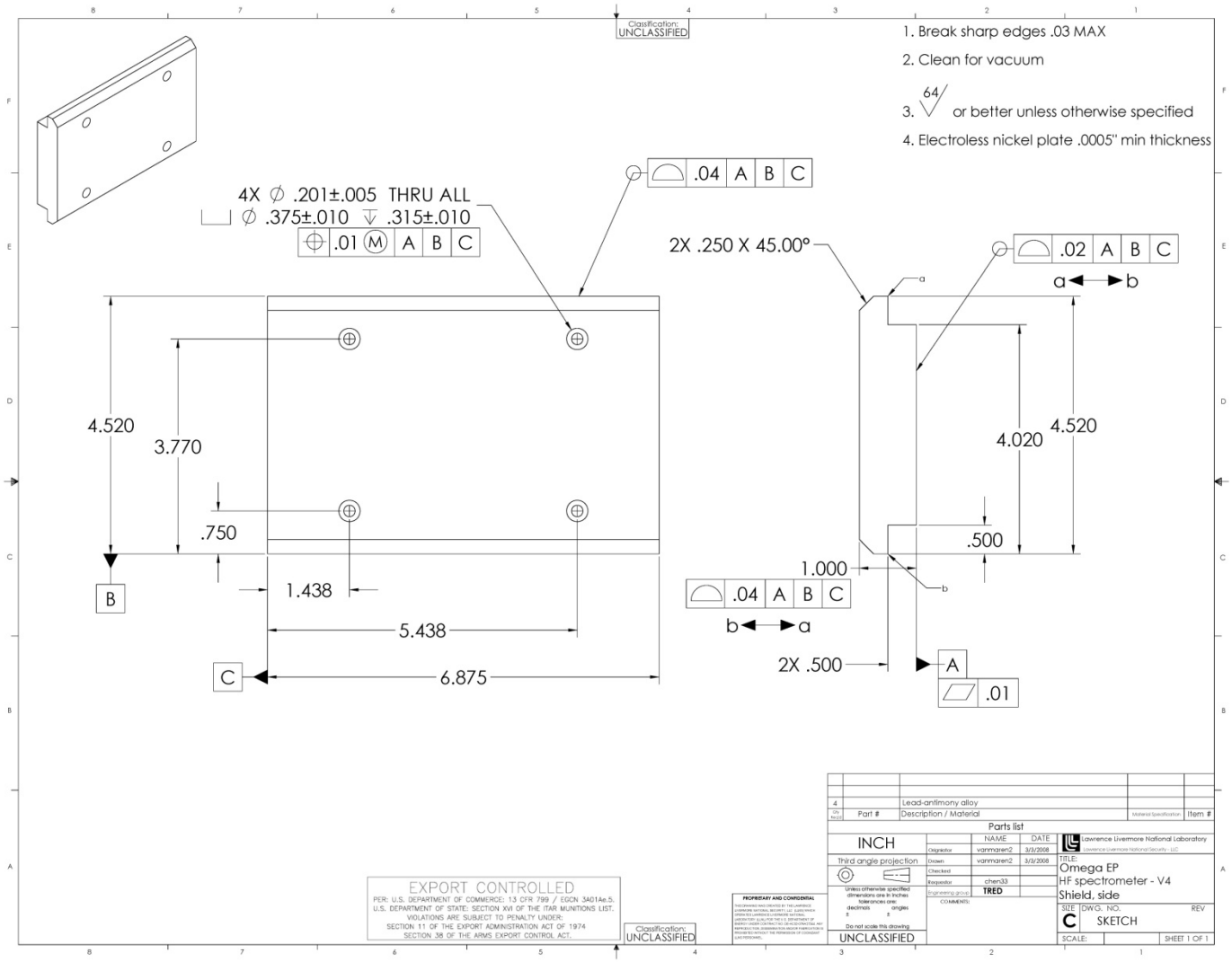
Classification: UNCLASSIFIED
1. Break sharp edges .03 MAX
2. Clean for vacuum
3. 64 or better unless otherwise specified
4. Electroless nickel plate .0005" min thickness
4X ∅ .201±.005 THRU ALL
⌴ ∅ .375±.010 ↧ .315±.010
.01 M A B C
.04 A B C
2X .250 X 45.00°
.02 A B C
a ◄► b
4.520
3.770
.750
1.438
5.438
6.875
B
C
4.020
4.520
.500
1.000
.04 A B C
b ◄► a
2X .500
A
.01
EXPORT CONTROLLED
PER: U.S. DEPARTMENT OF COMMERCE: 13 CFR 799 / ECCN 3A01Ae.5.
U.S. DEPARTMENT OF STATE: SECTION XVI OF THE ITAR MUNITIONS LIST.
VIOLATIONS ARE SUBJECT TO PENALTY UNDER:
SECTION 11 OF THE EXPORT ADMINISTRATION ACT OF 1974
SECTION 38 OF THE ARMS EXPORT CONTROL ACT.
Classification: UNCLASSIFIED
PROPRIETARY AND CONFIDENTIAL
Lead-antimony alloy
Part # Description / Material Material Specification Item #
Parts list
INCH
Third angle projection
Unless otherwise specified dimensions are in inches tolerances are: decimals ± angles ±
Do not scale this drawing
UNCLASSIFIED
NAME DATE
Originator vanmaren2 3/3/2008
Drawn vanmaren2 3/3/2008
Checked
Responsible chen33
Engineering group TRED
COMMENTS:
Lawrence Livermore National Laboratory
TITLE: Omega EP
HF spectrometer - V4
Shield, side
SIZE C DWG. NO. SKETCH REV
SCALE:
SHEET 1 OF 1

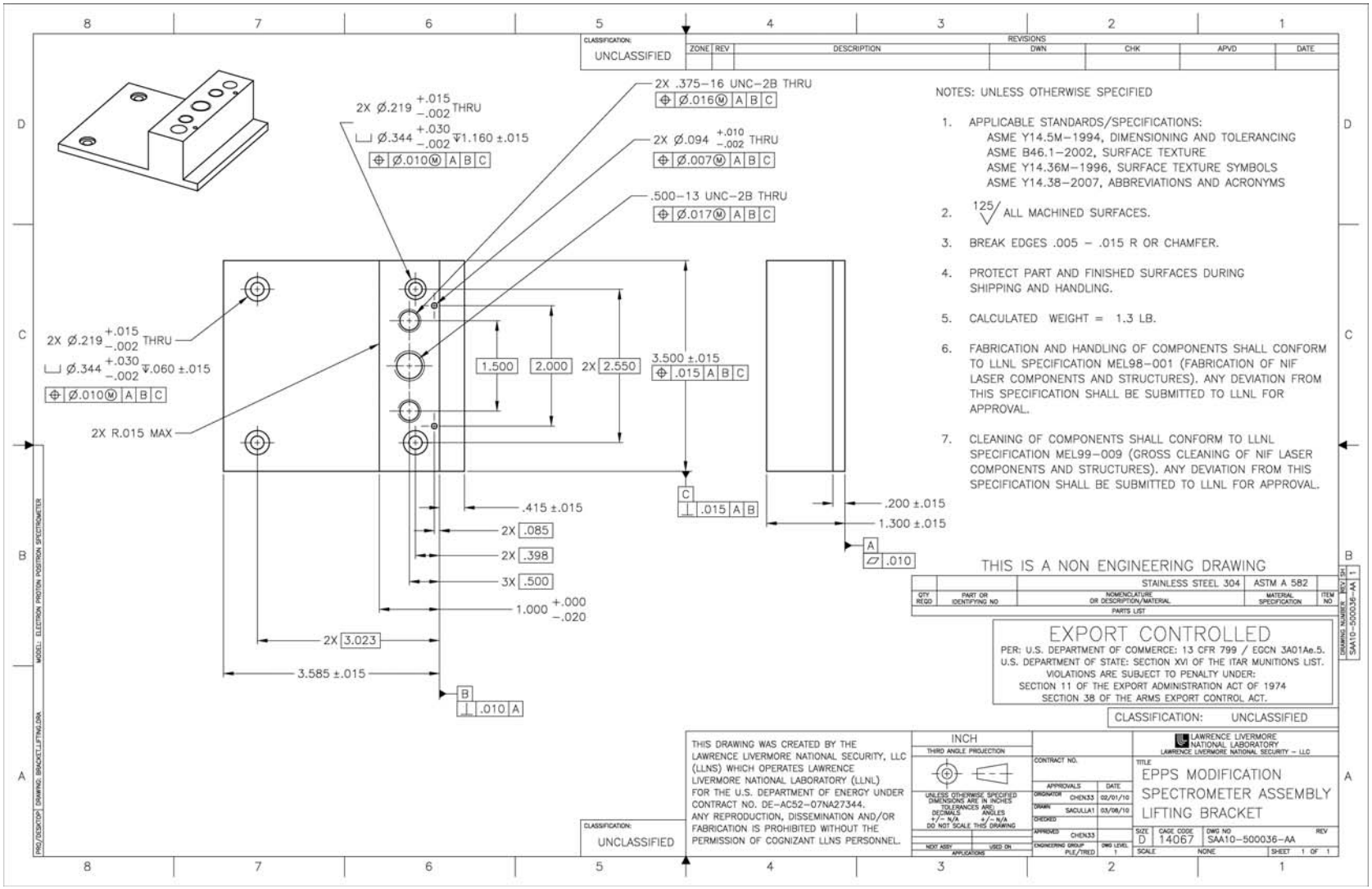
CLASSIFICATION: UNCLASSIFIED
REVISIONS
ZONE REV DESCRIPTION DWN CHK APVD DATE
2X .375–16 UNC–2B THRU
Ø.016 M A B C
2X Ø.219 +.015 –.002 THRU
Ø.344 +.030 –.002 ↧1.160 ±.015
Ø.010 M A B C
2X Ø.094 +.010 –.002 THRU
Ø.007 M A B C
.500–13 UNC–2B THRU
Ø.017 M A B C
2X Ø.219 +.015 –.002 THRU
Ø.344 +.030 –.002 ↧.060 ±.015
Ø.010 M A B C
2X R.015 MAX
1.500
2.000
2X 2.550
3.500 ±.015
.015 A B C
C
.015 A B
.415 ±.015
2X .085
2X .398
3X .500
1.000 +.000 –.020
2X 3.023
3.585 ±.015
B
.010 A
.200 ±.015
1.300 ±.015
A
.010
NOTES: UNLESS OTHERWISE SPECIFIED
1. APPLICABLE STANDARDS/SPECIFICATIONS:
ASME Y14.5M–1994, DIMENSIONING AND TOLERANCING
ASME B46.1–2002, SURFACE TEXTURE
ASME Y14.36M–1996, SURFACE TEXTURE SYMBOLS
ASME Y14.38–2007, ABBREVIATIONS AND ACRONYMS
2. 125 ALL MACHINED SURFACES.
3. BREAK EDGES .005 – .015 R OR CHAMFER.
4. PROTECT PART AND FINISHED SURFACES DURING SHIPPING AND HANDLING.
5. CALCULATED WEIGHT = 1.3 LB.
6. FABRICATION AND HANDLING OF COMPONENTS SHALL CONFORM TO LLNL SPECIFICATION MEL98–001 (FABRICATION OF NIF LASER COMPONENTS AND STRUCTURES). ANY DEVIATION FROM THIS SPECIFICATION SHALL BE SUBMITTED TO LLNL FOR APPROVAL.
7. CLEANING OF COMPONENTS SHALL CONFORM TO LLNL SPECIFICATION MEL99–009 (GROSS CLEANING OF NIF LASER COMPONENTS AND STRUCTURES). ANY DEVIATION FROM THIS SPECIFICATION SHALL BE SUBMITTED TO LLNL FOR APPROVAL.
THIS IS A NON ENGINEERING DRAWING
QTY REQD | PART OR IDENTIFYING NO | NOMENCLATURE OR DESCRIPTION/MATERIAL | MATERIAL SPECIFICATION | ITEM NO.
STAINLESS STEEL 304 | ASTM A 582
PARTS LIST
EXPORT CONTROLLED
PER: U.S. DEPARTMENT OF COMMERCE: 13 CFR 799 / ECCN 3A01Ae.5.
U.S. DEPARTMENT OF STATE: SECTION XVI OF THE ITAR MUNITIONS LIST.
VIOLATIONS ARE SUBJECT TO PENALTY UNDER:
SECTION 11 OF THE EXPORT ADMINISTRATION ACT OF 1974
SECTION 38 OF THE ARMS EXPORT CONTROL ACT.
CLASSIFICATION: UNCLASSIFIED
THIS DRAWING WAS CREATED BY THE LAWRENCE LIVERMORE NATIONAL SECURITY, LLC (LLNS) WHICH OPERATES LAWRENCE LIVERMORE NATIONAL LABORATORY (LLNL) FOR THE U.S. DEPARTMENT OF ENERGY UNDER CONTRACT NO. DE–AC52–07NA27344. ANY REPRODUCTION, DISSEMINATION AND/OR FABRICATION IS PROHIBITED WITHOUT THE PERMISSION OF COGNIZANT LLNS PERSONNEL.
INCH
THIRD ANGLE PROJECTION
UNLESS OTHERWISE SPECIFIED DIMENSIONS ARE IN INCHES TOLERANCES ARE: DECIMALS +/– N/A ANGLES +/– N/A
DO NOT SCALE THIS DRAWING
CONTRACT NO.
APPROVALS DATE
ORIGINATOR CHEN33 02/01/10
DRAWN SACULLA1 03/08/10
CHECKED
APPROVED CHEN33
ENGINEERING GROUP FILE/TREE
DWG LEVEL 1
NEXT ASSY USED ON
APPLICATIONS
LAWRENCE LIVERMORE NATIONAL LABORATORY
LAWRENCE LIVERMORE NATIONAL SECURITY – LLC
TITLE
EPPS MODIFICATION
SPECTROMETER ASSEMBLY
LIFTING BRACKET
SIZE D CAGE CODE 14067 DWG NO SAA10–500036–AA REV
SCALE NONE SHEET 1 OF 1
DRAWING NUMBER SAA10–500036–AA REV SH 1
MODEL: ELECTRON PROTON POSITRON SPECTROMETER
PRO/DESKTOP DRAWING: BRACKET_LIFTING.DRA

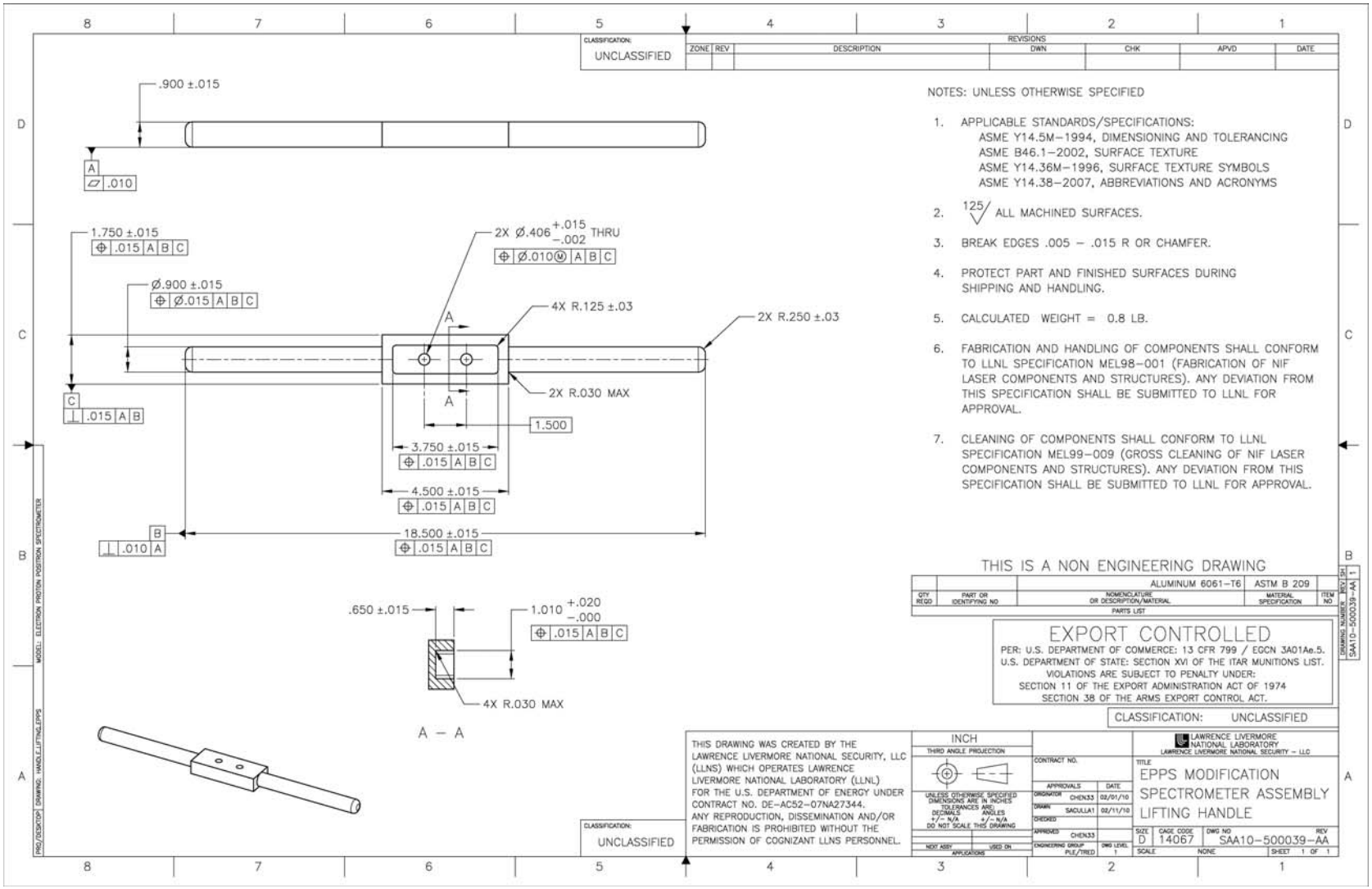
CLASSIFICATION: UNCLASSIFIED
REVISIONS
ZONE REV DESCRIPTION DWN CHK APVD DATE
.900 ±.015
A
.010
1.750 ±.015
.015 A B C
2X Ø.406 +.015 −.002 THRU
Ø.010 M A B C
Ø.900 ±.015
Ø.015 A B C
4X R.125 ±.03
2X R.250 ±.03
2X R.030 MAX
C
.015 A B
1.500
3.750 ±.015
.015 A B C
4.500 ±.015
.015 A B C
B
.010 A
18.500 ±.015
.015 A B C
.650 ±.015
1.010 +.020 −.000
.015 A B C
4X R.030 MAX
A − A
NOTES: UNLESS OTHERWISE SPECIFIED
1. APPLICABLE STANDARDS/SPECIFICATIONS:
ASME Y14.5M−1994, DIMENSIONING AND TOLERANCING
ASME B46.1−2002, SURFACE TEXTURE
ASME Y14.36M−1996, SURFACE TEXTURE SYMBOLS
ASME Y14.38−2007, ABBREVIATIONS AND ACRONYMS
2. 125 ALL MACHINED SURFACES.
3. BREAK EDGES .005 − .015 R OR CHAMFER.
4. PROTECT PART AND FINISHED SURFACES DURING SHIPPING AND HANDLING.
5. CALCULATED WEIGHT = 0.8 LB.
6. FABRICATION AND HANDLING OF COMPONENTS SHALL CONFORM TO LLNL SPECIFICATION MEL98−001 (FABRICATION OF NIF LASER COMPONENTS AND STRUCTURES). ANY DEVIATION FROM THIS SPECIFICATION SHALL BE SUBMITTED TO LLNL FOR APPROVAL.
7. CLEANING OF COMPONENTS SHALL CONFORM TO LLNL SPECIFICATION MEL99−009 (GROSS CLEANING OF NIF LASER COMPONENTS AND STRUCTURES). ANY DEVIATION FROM THIS SPECIFICATION SHALL BE SUBMITTED TO LLNL FOR APPROVAL.
THIS IS A NON ENGINEERING DRAWING
QTY REQD | PART OR IDENTIFYING NO | NOMENCLATURE OR DESCRIPTION/MATERIAL | MATERIAL SPECIFICATION | ITEM NO.
ALUMINUM 6061−T6 | ASTM B 209
PARTS LIST
EXPORT CONTROLLED
PER: U.S. DEPARTMENT OF COMMERCE: 13 CFR 799 / EGCN 3A01Ae.5.
U.S. DEPARTMENT OF STATE: SECTION XVI OF THE ITAR MUNITIONS LIST.
VIOLATIONS ARE SUBJECT TO PENALTY UNDER:
SECTION 11 OF THE EXPORT ADMINISTRATION ACT OF 1974
SECTION 38 OF THE ARMS EXPORT CONTROL ACT.
CLASSIFICATION: UNCLASSIFIED
THIS DRAWING WAS CREATED BY THE LAWRENCE LIVERMORE NATIONAL SECURITY, LLC (LLNS) WHICH OPERATES LAWRENCE LIVERMORE NATIONAL LABORATORY (LLNL) FOR THE U.S. DEPARTMENT OF ENERGY UNDER CONTRACT NO. DE−AC52−07NA27344. ANY REPRODUCTION, DISSEMINATION AND/OR FABRICATION IS PROHIBITED WITHOUT THE PERMISSION OF COGNIZANT LLNS PERSONNEL.
INCH
THIRD ANGLE PROJECTION
UNLESS OTHERWISE SPECIFIED DIMENSIONS ARE IN INCHES TOLERANCES ARE: DECIMALS +/− N/A ANGLES +/− N/A
DO NOT SCALE THIS DRAWING
NEXT ASSY USED ON
APPLICATIONS
CONTRACT NO.
APPROVALS DATE
ORIGINATOR CHEN33 02/01/10
DRAWN SACULLA1 02/11/10
CHECKED
APPROVED CHEN33
ENGINEERING GROUP FILE/TRED
DWG LEVEL 1
LAWRENCE LIVERMORE NATIONAL LABORATORY
LAWRENCE LIVERMORE NATIONAL SECURITY − LLC
TITLE
EPPS MODIFICATION
SPECTROMETER ASSEMBLY
LIFTING HANDLE
SIZE D CAGE CODE 14067 DWG NO SAA10−500039−AA REV
SCALE NONE SHEET 1 OF 1
DRAWING NUMBER SAA10−500039−AA REV SH 1
MODEL: ELECTRON PROTON POSITRON SPECTROMETER
PRO/DESKTOP DRAWING: HANDLE_LIFTING_EPPS

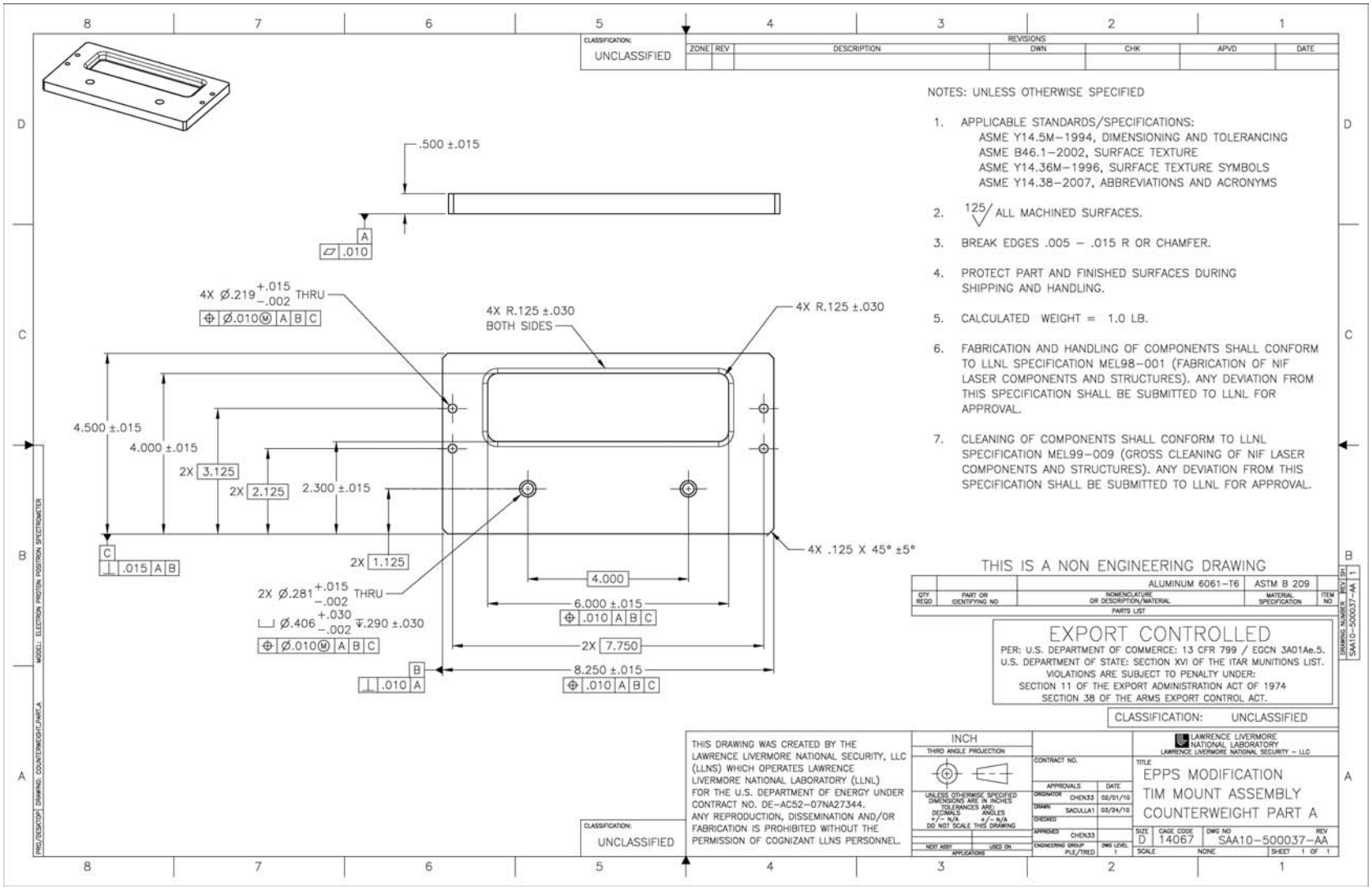
CLASSIFICATION: UNCLASSIFIED
REVISIONS
ZONE REV DESCRIPTION DWN CHK APVD DATE
NOTES: UNLESS OTHERWISE SPECIFIED
1. APPLICABLE STANDARDS/SPECIFICATIONS:
ASME Y14.5M–1994, DIMENSIONING AND TOLERANCING
ASME B46.1–2002, SURFACE TEXTURE
ASME Y14.36M–1996, SURFACE TEXTURE SYMBOLS
ASME Y14.38–2007, ABBREVIATIONS AND ACRONYMS
2. 125 ALL MACHINED SURFACES.
3. BREAK EDGES .005 – .015 R OR CHAMFER.
4. PROTECT PART AND FINISHED SURFACES DURING SHIPPING AND HANDLING.
5. CALCULATED WEIGHT = 1.0 LB.
6. FABRICATION AND HANDLING OF COMPONENTS SHALL CONFORM TO LLNL SPECIFICATION MEL98–001 (FABRICATION OF NIF LASER COMPONENTS AND STRUCTURES). ANY DEVIATION FROM THIS SPECIFICATION SHALL BE SUBMITTED TO LLNL FOR APPROVAL.
7. CLEANING OF COMPONENTS SHALL CONFORM TO LLNL SPECIFICATION MEL99–009 (GROSS CLEANING OF NIF LASER COMPONENTS AND STRUCTURES). ANY DEVIATION FROM THIS SPECIFICATION SHALL BE SUBMITTED TO LLNL FOR APPROVAL.
.500 ±.015
A
.010
4X Ø.219 +.015 –.002 THRU
Ø.010 M A B C
4X R.125 ±.030
BOTH SIDES
4X R.125 ±.030
4.500 ±.015
4.000 ±.015
2X 3.125
2X 2.125
2.300 ±.015
C
.015 A B
2X 1.125
2X Ø.281 +.015 –.002 THRU
Ø.406 +.030 –.002 ↧.290 ±.030
Ø.010 M A B C
4X .125 X 45° ±5°
4.000
6.000 ±.015
.010 A B C
2X 7.750
B
.010 A
8.250 ±.015
.010 A B C
THIS IS A NON ENGINEERING DRAWING
QTY REQD
PART OR IDENTIFYING NO
NOMENCLATURE OR DESCRIPTION/MATERIAL
MATERIAL SPECIFICATION
ITEM NO.
ALUMINUM 6061–T6
ASTM B 209
PARTS LIST
EXPORT CONTROLLED
PER: U.S. DEPARTMENT OF COMMERCE: 13 CFR 799 / EGCN 3A01Ae.5.
U.S. DEPARTMENT OF STATE: SECTION XVI OF THE ITAR MUNITIONS LIST.
VIOLATIONS ARE SUBJECT TO PENALTY UNDER:
SECTION 11 OF THE EXPORT ADMINISTRATION ACT OF 1974
SECTION 38 OF THE ARMS EXPORT CONTROL ACT.
CLASSIFICATION: UNCLASSIFIED
THIS DRAWING WAS CREATED BY THE LAWRENCE LIVERMORE NATIONAL SECURITY, LLC (LLNS) WHICH OPERATES LAWRENCE LIVERMORE NATIONAL LABORATORY (LLNL) FOR THE U.S. DEPARTMENT OF ENERGY UNDER CONTRACT NO. DE–AC52–07NA27344. ANY REPRODUCTION, DISSEMINATION AND/OR FABRICATION IS PROHIBITED WITHOUT THE PERMISSION OF COGNIZANT LLNS PERSONNEL.
INCH
THIRD ANGLE PROJECTION
UNLESS OTHERWISE SPECIFIED DIMENSIONS ARE IN INCHES TOLERANCES ARE: DECIMALS +/– N/A ANGLES +/– N/A
DO NOT SCALE THIS DRAWING
NEXT ASSY USED ON
APPLICATIONS
CONTRACT NO.
APPROVALS DATE
ORIGINATOR CHEN33 02/01/10
DRAWN SACULLA1 03/24/10
CHECKED
APPROVED CHEN33
ENGINEERING GROUP FILE/TREE
DWG LEVEL 1
LAWRENCE LIVERMORE NATIONAL LABORATORY
LAWRENCE LIVERMORE NATIONAL SECURITY – LLC
TITLE
EPPS MODIFICATION
TIM MOUNT ASSEMBLY
COUNTERWEIGHT PART A
SIZE D
CAGE CODE 14067
DWG NO SAA10–500037–AA
REV
SCALE NONE
SHEET 1 OF 1
DRAWING NUMBER SAA10–500037–AA
REV
SH 1
MODEL: ELECTRON PROTON POSITRON SPECTROMETER
PRO/DESKTOP DRAWING: COUNTERWEIGHT_PART_A
CLASSIFICATION: UNCLASSIFIED

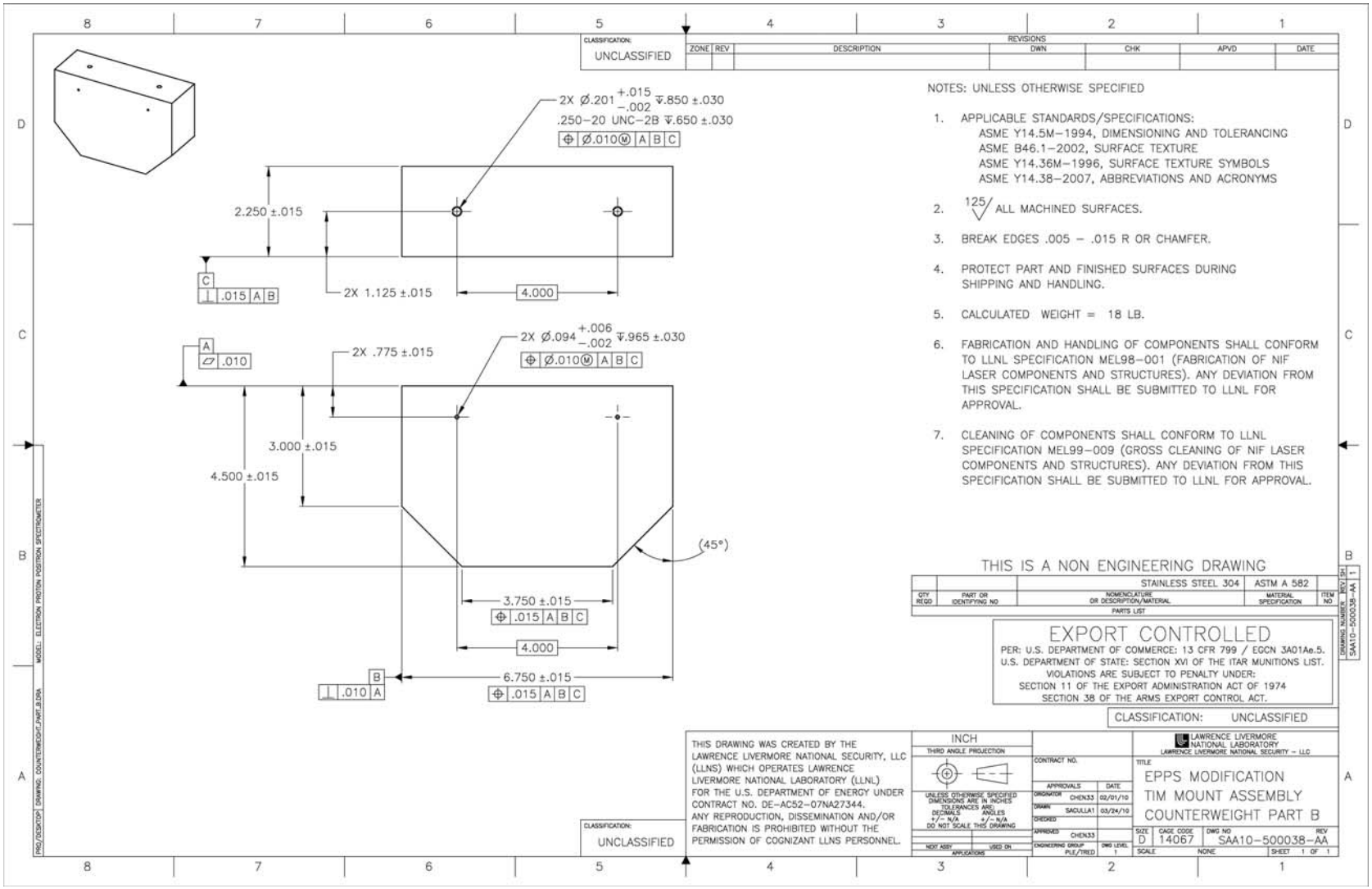
CLASSIFICATION: UNCLASSIFIED
REVISIONS
ZONE REV DESCRIPTION DWN CHK APVD DATE
2X Ø.201 +.015 −.002 ↧.850 ±.030
.250−20 UNC−2B ↧.650 ±.030
Ø.010Ⓜ A B C
2.250 ±.015
C
.015 A B
2X 1.125 ±.015
4.000
A
.010
2X .775 ±.015
2X Ø.094 +.006 −.002 ↧.965 ±.030
Ø.010Ⓜ A B C
3.000 ±.015
4.500 ±.015
(45°)
3.750 ±.015
.015 A B C
4.000
B
.010 A
6.750 ±.015
.015 A B C
NOTES: UNLESS OTHERWISE SPECIFIED
1. APPLICABLE STANDARDS/SPECIFICATIONS:
ASME Y14.5M−1994, DIMENSIONING AND TOLERANCING
ASME B46.1−2002, SURFACE TEXTURE
ASME Y14.36M−1996, SURFACE TEXTURE SYMBOLS
ASME Y14.38−2007, ABBREVIATIONS AND ACRONYMS
2. 125 ALL MACHINED SURFACES.
3. BREAK EDGES .005 − .015 R OR CHAMFER.
4. PROTECT PART AND FINISHED SURFACES DURING SHIPPING AND HANDLING.
5. CALCULATED WEIGHT = 18 LB.
6. FABRICATION AND HANDLING OF COMPONENTS SHALL CONFORM TO LLNL SPECIFICATION MEL98−001 (FABRICATION OF NIF LASER COMPONENTS AND STRUCTURES). ANY DEVIATION FROM THIS SPECIFICATION SHALL BE SUBMITTED TO LLNL FOR APPROVAL.
7. CLEANING OF COMPONENTS SHALL CONFORM TO LLNL SPECIFICATION MEL99−009 (GROSS CLEANING OF NIF LASER COMPONENTS AND STRUCTURES). ANY DEVIATION FROM THIS SPECIFICATION SHALL BE SUBMITTED TO LLNL FOR APPROVAL.
THIS IS A NON ENGINEERING DRAWING
QTY REQD
PART OR IDENTIFYING NO
NOMENCLATURE OR DESCRIPTION/MATERIAL
MATERIAL SPECIFICATION
ITEM NO.
STAINLESS STEEL 304
ASTM A 582
PARTS LIST
EXPORT CONTROLLED
PER: U.S. DEPARTMENT OF COMMERCE: 13 CFR 799 / EGCN 3A01Ae.5.
U.S. DEPARTMENT OF STATE: SECTION XVI OF THE ITAR MUNITIONS LIST.
VIOLATIONS ARE SUBJECT TO PENALTY UNDER:
SECTION 11 OF THE EXPORT ADMINISTRATION ACT OF 1974
SECTION 38 OF THE ARMS EXPORT CONTROL ACT.
CLASSIFICATION: UNCLASSIFIED
THIS DRAWING WAS CREATED BY THE LAWRENCE LIVERMORE NATIONAL SECURITY, LLC (LLNS) WHICH OPERATES LAWRENCE LIVERMORE NATIONAL LABORATORY (LLNL) FOR THE U.S. DEPARTMENT OF ENERGY UNDER CONTRACT NO. DE−AC52−07NA27344. ANY REPRODUCTION, DISSEMINATION AND/OR FABRICATION IS PROHIBITED WITHOUT THE PERMISSION OF COGNIZANT LLNS PERSONNEL.
INCH
THIRD ANGLE PROJECTION
UNLESS OTHERWISE SPECIFIED DIMENSIONS ARE IN INCHES TOLERANCES ARE: DECIMALS +/− N/A ANGLES +/− N/A
DO NOT SCALE THIS DRAWING
NEXT ASSY USED ON
APPLICATIONS
CONTRACT NO.
APPROVALS DATE
ORIGINATOR CHEN33 02/01/10
DRAWN SACULLA1 03/24/10
CHECKED
APPROVED CHEN33
ENGINEERING GROUP FILE/TRED
DWG LEVEL 1
LAWRENCE LIVERMORE NATIONAL LABORATORY
LAWRENCE LIVERMORE NATIONAL SECURITY − LLC
TITLE
EPPS MODIFICATION
TIM MOUNT ASSEMBLY
COUNTERWEIGHT PART B
SIZE D
CAGE CODE 14067
DWG NO SAA10−500038−AA
REV
SCALE NONE
SHEET 1 OF 1
DRAWING NUMBER SAA10−500038−AA
REV
SH 1
MODEL: ELECTRON PROTON POSITRON SPECTROMETER
PRO/DESKTOP DRAWING: COUNTERWEIGHT_PART_B.DRA