LAWRENCE
LIVERMORE
NATIONAL
LABORATORY

LLNL-CONF-491678

DESIGN & FABRICATION OF A PRECISION PULSED VALVE SYSTEM FOR NEUTRON IMAGING

P. Fitsos, S. Edson, J. Hall, B. Rusnak

August 1, 2011

ASPE 2011 Annual Meeting
Denver, CO, United States
November 13, 2011 through November 18, 2011

Disclaimer

This document was prepared as an account of work sponsored by an agency of the United States government. Neither the United States government nor Lawrence Livermore National Security, LLC, nor any of their employees makes any warranty, expressed or implied, or assumes any legal liability or responsibility for the accuracy, completeness, or usefulness of any information, apparatus, product, or process disclosed, or represents that its use would not infringe privately owned rights. Reference herein to any specific commercial product, process, or service by trade name, trademark, manufacturer, or otherwise does not necessarily constitute or imply its endorsement, recommendation, or favoring by the United States government or Lawrence Livermore National Security, LLC. The views and opinions of authors expressed herein do not necessarily state or reflect those of the United States government or Lawrence Livermore National Security, LLC, and shall not be used for advertising or product endorsement purposes.

DESIGN & FABRICATION OF A PRECISION PULSED VALVE SYSTEM FOR NEUTRON IMAGING

Pete Fitsos, Stan Edson, Jim Hall, Brian Rusnak
Lawrence Livermore National Laboratory
Livermore, California, 94550, USA

INTRODUCTION

The development of a high-energy (10Mev) neutron imaging system at Lawrence Livermore National Laboratory (LLNL) depends on a precision engineered pneumatic driven valve system for creating the neutrons that are used for imaging dense objects.

This valve system creates pulses of deuterium gas that interact with a high energy pulsed beam and thereby create neutrons that are used for imaging. This subsystem is part of a larger system which includes a linear accelerator that creates a deuteron beam, a scintillator detector and high resolution CCD cameras.

SYSTEM DESIGN

The mechanical design consists of a hollow titanium double acting piston as shown in Figure 1. This piston is attached to a titanium tube that serves as a bearing inner surface that locates the piston radially as it moves up and down as shown in the complete assembly in Figure 2. The piston is housed inside a titanium cylinder with titanium manifolds at both ends.

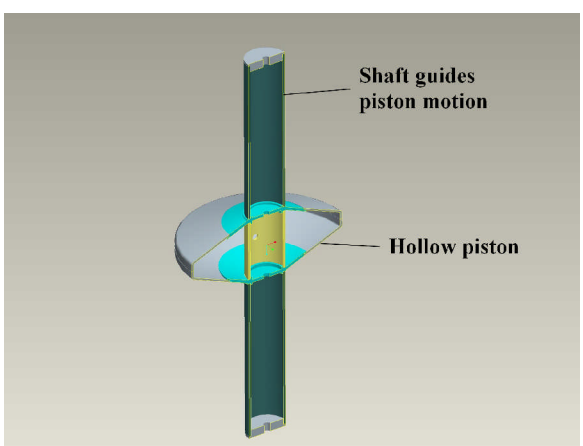

FIGURE 1. Hollow piston cross section.

Timed air pressure at 7 atmospheres enters the manifolds to drive the piston up and down. This in turn drives a poppet valve located in a gas cell as shown in Figure 3. As the valve opens and closes it charges a gas cell with up to 3 atmospheres of deuterium. At the peak gas cell pressure a pulsed deuteron beam fires through the beam hole to cause an interaction with the deuterium and thereby create neutrons. These neutrons continue on down the beam path for use in imaging.

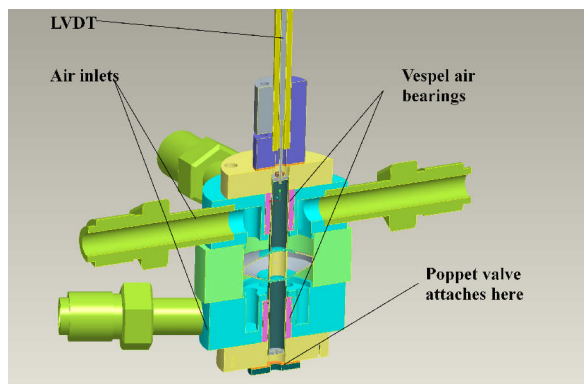

FIGURE 2. Complete piston and cylinder assembly cross section.

The valve opening and closing was designed to operate at a maximum speed of 1000 Hz in order to generate a deuterium pressure pulse to match the repetition rate of the beam pulses. In order to achieve this, the piston assembly was design to be supported laterally on air bearings at both ends where the piston tube passes through the manifolds. The air bearings will be made of vespel and will have stepped circumferential pocket designed to operate at 6 atmospheres. With a 0.5 micron step the radial load capacity was calculated to be approximately 5N (1.12lbf) [1][2]. Thereby maintaining a 1.3 micron radial clearance between the piston and the cylinder wall.

The timed air pressure that drives the piston up and down is controlled by Festo solenoids that are driven by a LabView program through a National Instruments digital-to-analog converter as shown in Figure 4.

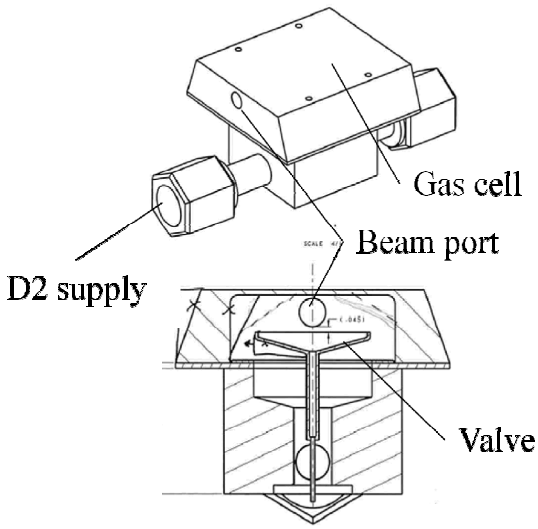

FIGURE 3. Gas cell and cross section

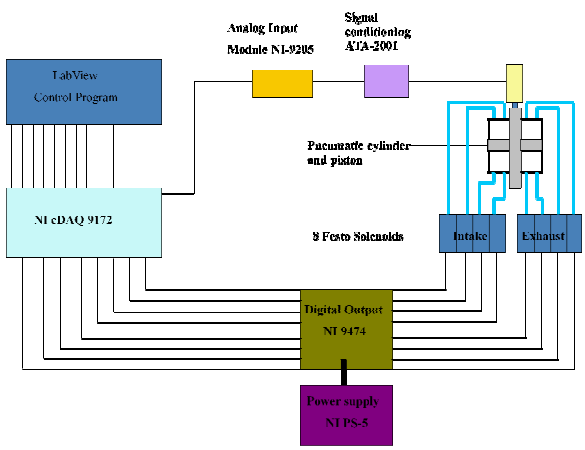

FIGURE 4. Supply and control schematic.

SYSTEM MODELING

Modeling of the pneumatic system was done by using a lumped parameter method (bond graphs) to characterize the mass flow and enthalpy into and out of each chamber as an isentropic nozzle [3]. The state equations shown below define the flow of gas into the piston's chamber as show in Figure 5.

$$\dot{m}_1 = A_1 \frac{P_u}{\sqrt{T_u}} \sqrt{\frac{2\gamma}{R(\gamma-1)}} \sqrt{Pr^{2/\gamma} - Pr^{(\gamma+1)/\gamma}} \qquad (1)$$

$$\dot{E}_1 = C_p T_u A_1 \frac{P_u}{\sqrt{T_u}} \sqrt{\frac{2\gamma}{R(\gamma-1)}} \sqrt{Pr^{2/\gamma} - Pr^{(\gamma+1)/\gamma}} \qquad (2)$$

Where:

m_1 = mass flow into chamber 1

E_1 = enthalpy flow into chamber 1

A_1 = flow area

P_u = upstream pressure

P_d = downstream pressure

C_p = specific heat constant pressure

C_v = specific heat constant volume

$$Pr = \frac{P_d}{P_u} \qquad \gamma = \frac{C_p}{C_v} \qquad R = C_p - C_v$$

The flow area was made time dependent and this was used to simulate the opening and closing of the solenoid intake and exhaust valves. The enthalpy in equation (2) was then used to solve for the pressure in chamber 1, given the volume of chamber 1,

$$P_1 = \frac{RE_1}{C_v V_1} \qquad (3)$$

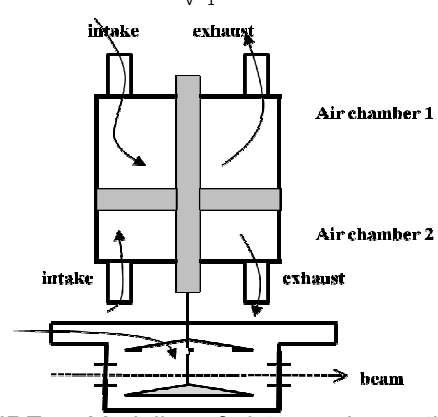

FIGURE 5. Modeling of piston, valve motion and the gas cell.

The differential equations (1) and (2) were numerically integrated in a Matlab simulation for both air chambers 1 and 2. The chamber pressure for both sides of the piston, as a function of time, was solved using equation (3) applied to each chamber. Thus yielding pressures P_1 and P_2 and the net force on the piston as shown below:

$$F_p = (P_1 - P_2) \cdot \text{piston area} \qquad (4)$$

This was then used to solve for the motion of the piston:

$$\dot{p}_{piston} = F_p - \lfloor m_{piston} \rfloor g \qquad (5)$$

$$\dot{q}_{piston} = \frac{p_{piston}}{m_{piston}} \qquad (6)$$

where: p_{piston} = piston momentum

m_{piston} = piston mass

q_{piston} = piston motion

The poppet valve is directly connected to the piston so that the area of the open valve can be calculated as follows:

$$\text{valve open area} = q_{piston} \cdot \pi \cdot \text{valve diameter} \qquad (7)$$

The same approach was used to determine the pressure in the gas cell by taking the valve open area in equation (7) and using it in equations (1) and (2) as the variable intake area for determining the mass and enthalpy flow of deuterium. This was balanced by also using the same equations with different areas to determine the net outflow of deuterium through the beam port holes. The pressure was determined by solving:

$$P_{gascell} = \frac{R\left(E_{valve} - E_{beamport}\right)}{C_v V_{gascell}} \qquad (8)$$

Where:

$P_{gas\ cell}$ = Pressure in gass cell

E_{valve} = Enthalpy flowing through the valve

$E_{beam\ port}$ = Enthalpy flowing through beam ports

The simulation of the complete system yielded valve motion and deuterium gas cell pressure as a function of time as shown in Figure 6.

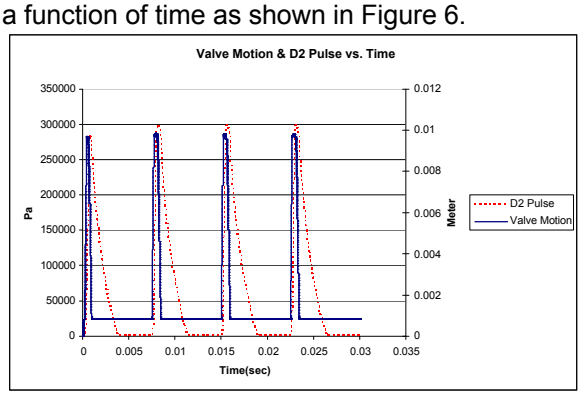

FIGURE 6. Valve motion & deuterium pressure pulse vs. time.

The valve in Figure 6 opens to a maximum displacement of 10mm every 7.5 milliseconds. This leads to a maximum deuterium pressure of 3 atmospheres that lags behind the valve motion by about a millisecond. The beam would be timed to fire at maximum pressure in the gas cell, thus yielding the highest production of neutrons.

In order to achieve the desired deuterium pressure pulse, the valve had to open and close within a millisecond. This would be achieved by timing the opening and closing of the solenoid valves as shown in Figure 7. Through simulation trial and error it was found that the simulation command pulses had to overlap in order to deal with the inertia in the system. Therefore the exhaust solenoid valve command on the top piston would have to open 2.5 milliseconds before the intake solenoid closed. Similarly the intake on the bottom chamber would open 0.5 milliseconds after the opening of the top solenoid. Also it was found in the simulation that the piston could be slowed before reaching its top and bottom position by adjusting the timing of the solenoids on the side where the piston was in compression. Thereby reducing the impact on the piston tube as it changed direction.

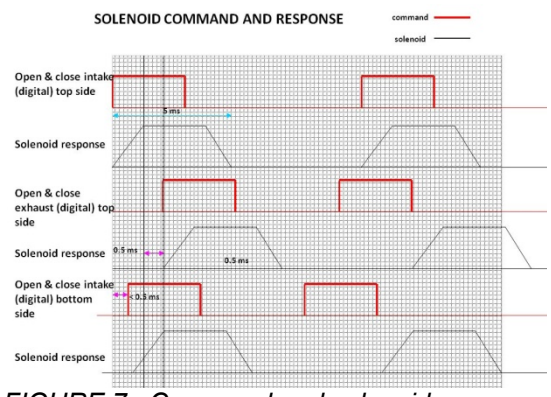

FIGURE 7. Command and solenoid response schematic.

The effect of blow by on cylinder pressure was simulated using equations (1) and (2). The area in the equations was the gap between the piston and the cylinder. The 1.3 micron radial gap was predicted to reduce the peak cylinder pressures by 10%.

FABRICATION

The piston and tube were machined out of titanium (Ti 6Al-4V) in sections. Titanium was chosen because of its high strength, lightness, fatigue properties and its favorable microstructure after laser welding. Figure 8 shows a cross section of the piston and its laser welded components. The top of each side of the piston was angled upward to reduce peak stresses in the structure due to the 7

atmosphere pressure on the piston. Figures 9 and 10 show how the piston was assembled in a fixture and how the precision machining allowed the assembly to be snapped together and apart at the center line before laser welding.

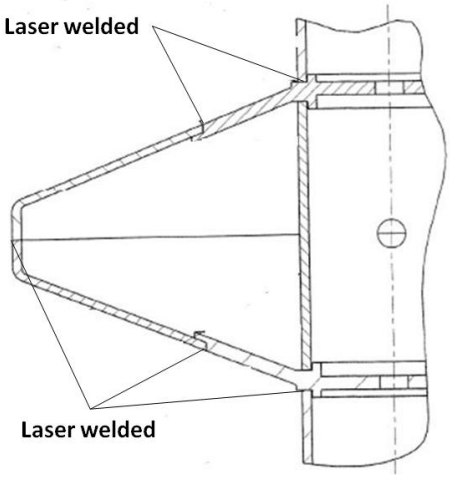

FIGURE 8. Cross section of piston.

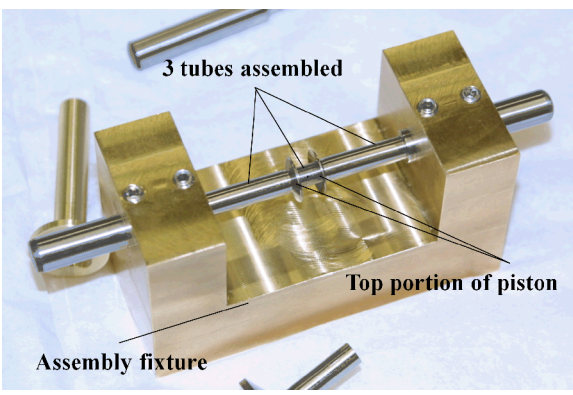

FIGURE 9. Portions of the piston assemble assembled on a fixture.

The completed piston as shown in Figure 11 has a mass of 2.5 grams. We made enough parts to fabricate 3 pistons and only one survived through all the manufacturing steps.

All the simulations were done assuming a total moving mass of 5.5 grams. This leaves 3 grams for the yet to be fabricated poppet valve. We think this possible given the success we have had in designing and fabricating the piston.

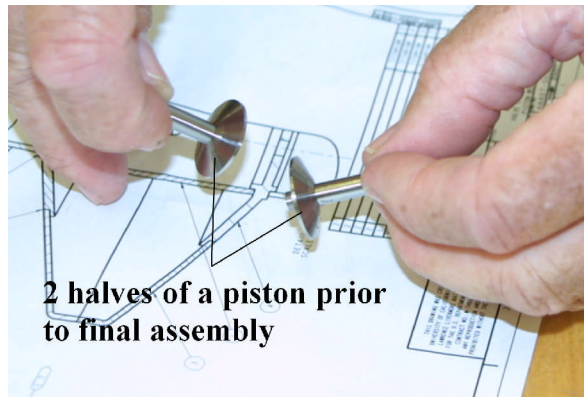

FIGURE 10. Two halves of a piston prior to final assembly.

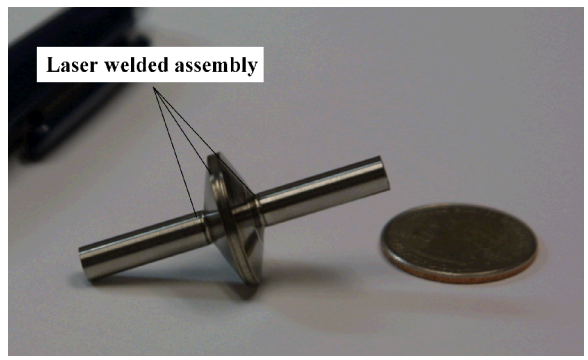

FIGURE 11. Laser welded piston assembly.

CONCLUSION

A pneumatic driven valve system for neutron imaging has been designed and partially fabricated. Tests for the completed system are planned for 2012.

REFERENCES

[1] Donaldson, R.R., Geraghty, P, Design Guide for Stepped-Clearance Journal Air Bearings. LLNL Internal Report, September 1991.

[2] Karnopp, D.C., Margolis, D.L., Rosenberg, R.C. System Dynamics, A Unified Approach, 2nd Ed, John Wyle & Sons, Inc: 1990.

[3] Slocum, A.H., Precision Machine Design Prentice-Hall, Inc: 1992.

Prepared by LLNL under Contract DE-AC52-07NA27344.