LAWRENCE
LIVERMORE
NATIONAL
LABORATORY

LLNL-CONF-573572

Development of the bus joint for the ITER Central Solenoid

N. N. Martovetsky, D. K. Irick, S. J. Kenney

August 14, 2012

27th Symposium on Fusion Technology
Liege, Belgium
September 24, 2012 through September 28, 2012

Disclaimer

This document was prepared as an account of work sponsored by an agency of the United States government. Neither the United States government nor Lawrence Livermore National Security, LLC, nor any of their employees makes any warranty, expressed or implied, or assumes any legal liability or responsibility for the accuracy, completeness, or usefulness of any information, apparatus, product, or process disclosed, or represents that its use would not infringe privately owned rights. Reference herein to any specific commercial product, process, or service by trade name, trademark, manufacturer, or otherwise does not necessarily constitute or imply its endorsement, recommendation, or favoring by the United States government or Lawrence Livermore National Security, LLC. The views and opinions of authors expressed herein do not necessarily state or reflect those of the United States government or Lawrence Livermore National Security, LLC, and shall not be used for advertising or product endorsement purposes.

Development of the Bus Joint for the ITER Central Solenoid[1]

Nicolai N. Martovetsky [a], David K. Irick [b], and Steve J. Kenney [c]

[a]*LLNL/ORNL, US ITER Project Office, 1055 Commerce Park Dr., Oak Ridge, TN 37831, USA, Ph.: 865- 576-2100, Fax: 865-574-8393, martovetskyn@ornl.gov (corresponding author)*
[b]*Magnet Development Laboratory, Suite 300, 10521 Research Dr., Knoxville, TN 37932-2573, USA, Ph.: 865-671-3008, dki@utk.edu*
[c]*US ITER Project Office, 1055 Commerce Park Dr., Oak Ridge, TN 37831, USA, Ph.: 865-766-9047, kenneys@ornl.gov*

ABSTRACT

The terminations of the Central Solenoid (CS) modules are connected to the bus extensions by joints located outside the CS in the gap between the CS and Torodial Field (TF) assemblies. These joints have very strict space limitations. Low resistance is a common requirement for all ITER joints. In addition, the CS bus joints will experience and must be designed to withstand significant variation in the magnetic field of several tenths of a Tesla per second during initiation of plasma. The joint resistance is specified to be less than 4 nOhm.

The joints also have to be soldered in the field and designed with the possibility to be installed and dismantled in order to allow cold testing in the cold test facility. We have developed coaxial joints that meet these requirements and have demonstrated the feasibility to fabricate and assemble them in the vertical configuration. We introduced a coupling cylinder with superconducting strands soldered to the surface of the cable that can be installed in the ITER assembly hall and at the Cold Test Facility. This cylinder serves as a transition area between the CS module and the bus extension.

We made two racetrack samples and tested four bus joints in our Joint Test Apparatus. Resistance of the bus joints was measured by a decay method and by a microvoltmeter; the value of the current was measured by the Hall probes. This measurement method was verified in the previous tests. The resistance of the joints varied insignificantly from 1.5 to 2 nOhm.

One of the challenges associated with a soldered joint is the inability to use corrosive chemicals that are difficult to clean. This paper describes our development work on cable preparation, chrome removal, compaction, soldering, and final assembly and presents the test results.

Keywords:
ITER Central Solenoid
Superconducting Cable in Conduit Conductor
Bus Joints
Electrical Resistance

1. Introduction

The ITER Central Solenoid (CS) consists of a stack of six modules that can be charged with independent currents from separate power supplies in order to support the ITER scenario. Each module has terminations about 1 m above the module plane as they arrive to the assembly ITER site. Three modules at the bottom of the stack are oriented with their terminations facing downward, and three modules on the top have terminations facing upward.

The terminations are connected to the bus extensions that are in turn connected to the feeders above and below the SC stack. The feeders lead the buses to the outside of the cryostat and to the power supplies, through the appropriate buswork.

Figure 1 shows the location of the joints relative to the coil.

[1]The views and opinions expressed herein do not necessarily reflect those of the ITER Organization. This manuscript has been authored by UT-Battelle LLC under Contract No. DE-AC05-00OR22725 with the US Department of Energy. The US Government retains and the publisher, by accepting the article for publication, acknowledges that the US Government retains a nonexclusive, paid-up, irrevocable, worldwide license to publish or reproduce the published form of this manuscript, or allow others to do so, for United States Government purposes.

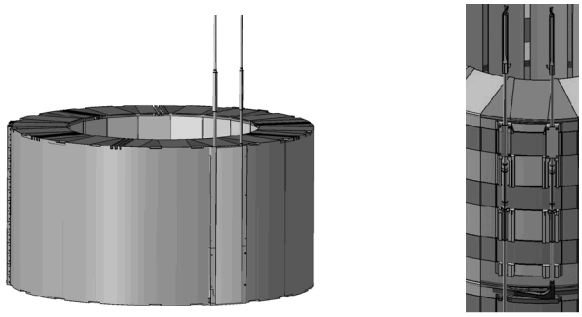

Fig. 1. CS module (left) and the bus joints between the terminations and bus extensions (right). The magnified inset on the right shows arrangement of the bus joints in the supporting structure, called cassettes.

2. Bus Joint Requirements

a) Electrical resistance. The electrical resistance requirement in the buses is less than 4 nOhm at 45 kA and 6 K. This requirement is soft, since the heat generated in the joints is relatively low in comparison with the other sources of heat in the magnet system. As long as the joint is stable, slightly higher resistance can be easily tolerated.

b) Space constraints. A bus joint is used to connect the coil terminations to the bus extensions that will be connected to the feeders. The most severe requirement on the bus joint is the radial build of the joint. The available space outside the module is about 65 mm, and that includes the structure containing the joints and buses, since the electromagnetic forces on the buses and joints are quite high. It also includes the insulation thickness, which is minimum 6 mm per side, 12 mm radial space allocation total.

c) AC losses and stability. AC losses in the joints shall not cause any irregularities, such as flux jumps or origination of the normal zone in the joints and buses. The AC loss heat generation in the joint is not a big contributor to the overall cryogenic loads, but local losses with large values of the induced current during initiation or plasma disruption are a clear concern. Therefore orientation of the joints where major loops for the induced currents are possible must be avoided.

d) Ability to dismantle the joint. The CS modules were supposed to go through full current tests in a Cold Test Facility. In order to do that, the terminations shall have a capability to be assembled and dismantled. One of the most compact designs, a bonded butt joint, developed and qualified by the US ITER Project Office (USIPO) [1], was not accepted by the US ITER team since it was considered a risky operation to cut and re-bond the joint.

3. Description of the Bus Joint Design

Figure 1 shows the main parts of the bus joint. The conductors to be joined (Item 4 in Fig. 2) are compacted in thin copper sleeves to 20% void fraction in the cable space, while the central channel has an un-obstructed passage for helium flow. The compacted cables enter into the copper split cylinder laced with Nb3Sn strands (Item 5 in Fig. 2) that is soldered to the surface of these copper sleeves. This is a critical soldered feature is responsible for the current transfer from one cable to the other through this laced cylinder, crossing the soldered interfaces. Copper crescents (Item 3 in Fig. 2) are soldered to the surface of the laced cylinder and play a the role of the an electrical shunt in case of the appearance of the normal zone in the joint and also serve as a structural reinforcement to the joint.

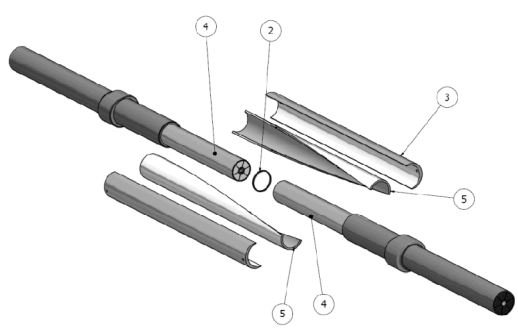

Fig. 2. Exploded view of the bus joint.

The cross section of the soldered joint is shown in Fig. 3. Due to the oval shape of the bus joint that has a coaxial geometry, the radial build of the joint is only 41 mm. Minimum ground insulation thickness is 6 mm. This allows the joint to be placed in the limited space between the outer diameter of the module and the inner vault of the TF coils. Still, the tolerances are very tight, which requires very close control of the dimensions and positioning during fabrication and assembly of the module.

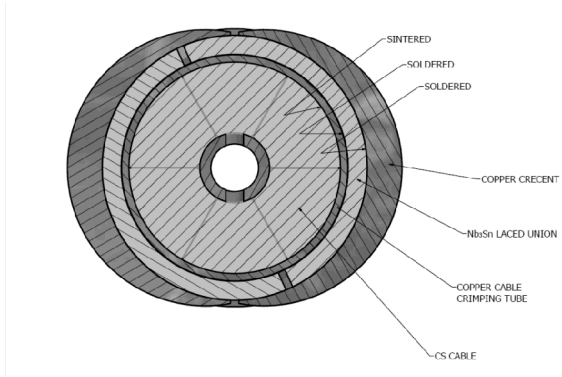

Fig. 3. Cross-section of the bus joint – superconducting layer around the cable and crescents on the outside.

4. Fabrication Sequence

The fabrication of the bus joint is a multistep complex process that involves the following operations.

4.1. Disassembly of the Cable

The bus joint is made between two buses that contain the CS cable in a thin-walled jacket. The jacket is removed and the cables are exposed to the appropriate length. In order to prepare the cable for chromium removal, the cable needs to be disassembled and spread to make penetration of the electrical current into the middle strands possible and unobstructed by the strands on the periphery. The initial length of the cable is longer than in the final joint; it is cut to size after heat treatment.

4.2. Chromium Removal

Chromium removal is performed by a reverse electroplating process in a NaOH solution. This process is an alternative to the main chromium-stripping technique from copper surface, in which it is removed by a chemical reaction with a hydrochloric acid (HCl) at 45–50°C in a bath that is ultrasonically activated to enhance the reaction. Although using HCl is a very efficient and simple process, the jacket material can develop stress accelerated corrosion in areas where even microscopic amounts of acid are present. Complete removal of the acid cannot be guaranteed; therefore, the ITER project introduced a requirement that halogens not be used in the vicinity of the cable and the jacket for chromium stripping, cleaning, soldering, or other purposes. The USIPO developed an alternative process – a reverse electroplating method – that is a usually recommended for chromium removal from carbon steel chrome–coated surfaces. After a brief development effort, this process of chromium stripping by reverse electroplating was established and successfully implemented. The copper surface after chromium removal by reverse electroplating was observed to be brighter than the copper surface after chrome removal by HCl etching. The copper surface is washed in deionized water, rinsed in methanol, and then dried with clean air or nitrogen.

4.3. Compaction of the Terminations

After the chrome stripping, a strong perforated tube is installed in the middle of the cable instead of the spiral and a slightly oversized copper sleeve is installed over the cable. Then the copper sleeve is compacted over the cable with a commercial crimper to the desired dimension that provides a void fraction in the cable area of 20%, excluding the central hole. Such compaction was demonstrated [2] to provide low interstrand resistance. The tube is strong enough to withstand the compacting pressure; the spring would have collapsed or damaged the strands at the points of contact, as had happened in the past.

4.4. Fabrication of the Laced Coupling Cylinder

The laced cylinder contains 232 Nb3Sn strands without chrome plating, in two layers. The twist pitch of the strands in the laced cylinder is 1200 mm – a compromise to minimize electromagnetic losses in the transverse and longitudinal varying field. Electromagnetic analysis shows that the outermost strands of the laced cylinder saturate (i.e., carry critical current), but the rest of the strands are far from saturation, so the induced current in the joint is relatively low. The laced cylinder is made from a thin copper cylinder with a spiral cut. The Nb3Sn strands are secured parallel to the cut, and the assembly is heat treated to the specifications. After heat treatment the strands are soldered with a high-temperature alloy 95%Sn-5%Sb or staybrite alloy 95%Sn-5%Ag, and then the ends of the cylinder are cut to size. The laced cylinder is shown in Fig. 4.

4.5. Heat Treatment

Reaction heat treatment of the parts takes place at the same time or separately. The CS module termination is heat treated with the module. The laced cylinder is treated in a furnace, as described above; the bus extension heat treatment is done in a special tube furnace or together with the CS module. This approach allows some flexibility in selection of the superconducting strands for the laced cylinder and bus extensions.

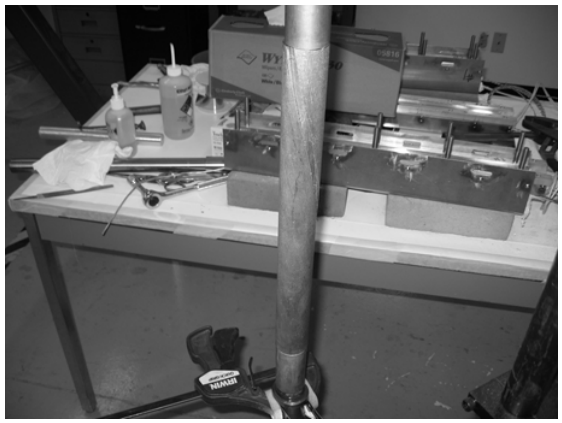

Fig. 4. Bus joint, laced coupling cylinder is installed and soldered.

4.6. Soldering of the Coupling Cylinder and Copper Profiles

Soldering of the laced coupling cylinder to the compacted cables and to the copper profiles occurs in one step. The soldered surfaces are fluxed with a halogen-free no-clean flux, and a thin sheet of solder is inserted. All surfaces to be soldered are tinned with the eutectic 63%Pb-37%Sn solder. The joint is assembled in a fixture with a built-in heater, and in a controlled manner the temperature in the joint is brought to 210°C. The joints are assembled in a vertical orientation, which is often a challenge when soldering large assemblies due to running of the solder. Aluminum foil is used at the bottom of the joint assembly as additional insurance to prevent solder leaks. The butts of the cables are protected with a special silicone O-ring (Item 2, Fig. 2) to prevent the solder from entering the cable area. Several assembly trials showed a very good solder filling.

Figure 5 shows a racetrack with two bus joints after soldering the joints. It is worth noting that assembly of the racetrack, where two joints have to fit inside the coupling laced cylinder simultaneously, is significantly more difficult than assembly of the bus joint in the CS, where the bus extension is relatively easy to move around.

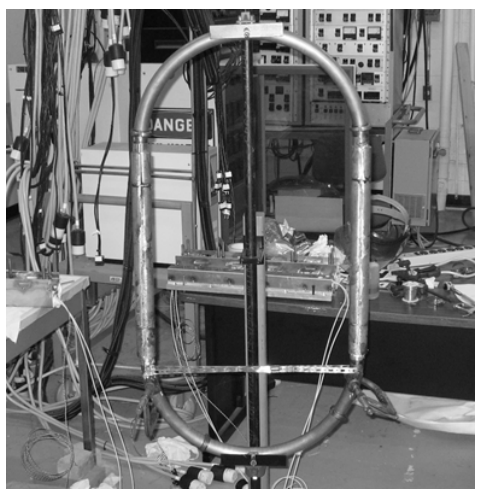

Fig. 5. Soldered bus joint racetrack for resistance testing.

4.7. Final Enclosure in a Stainless Steel Jacket

After the soldering operation, the joint is encased in a stainless steel thin-wall formed jacket that is welded around bosses on the buses. The longitudinal weld then completes the enclosure.

5. Measurements of the Joint Resistance

In order to measure electrical resistance of the bus joints and obtain representative statistics, two racetracks that contained two bus joints each in a single loop were built, as shown in Fig. 5. Thus, a total of four bus joints were tested. Electrical resistance of the racetrack in a Joint Test Apparatus (JTA) that was built by the US ITER in 2009 [2] was measured in order to measure the electrical resistance of the joints for the ITER CS and was used for development and qualification of the CS interpancake joints [1, 2]. The JTA is a superconducting transformer in which the primary winding induces a current in the racetrack containing the joints. When the current in the primary winding is held constant, the current decay in the racetrack depends only on the inductance L and the resistance R of the racetrack.

Figure 6 shows variation of the current in the racetrack and in the primary coil. The decay of the current during the flat tops in the primary gives the L/R value. Knowing L we can determine R. In order to separate resistances of the racetrack joints, we also use a microvoltmeter across each joint. The voltmeter method is very sensitive to the location of the voltage taps, since it is very difficult to obtain a perfectly uniform voltage distribution. For the first racetrack data, shown in Fig. 6, the inductive method showed 3.3 nOhm total resistance in the racetrack loop, while separate resistances of the joints by the voltmeter method showed 1.2 and 1.5 nOhm at 80 kA, which gives a total of 2.7 nOhm, a somewhat lower number than the inductive method. The second racetrack showed 3.4 nOhm by the inductive method and 1.6 nOhm and 1.2 nOhm by the voltmeter method, respectively, between the two joints.

Thus, the joint resistances are comfortably below the allowable target of 4 nOhm per joint, even taking into account the magnetoresistance effect in the joints in the CS (maximum field in the CS is 3 T at 45 kA) versus test conditions of 1 T at 80 kA in the JTA.

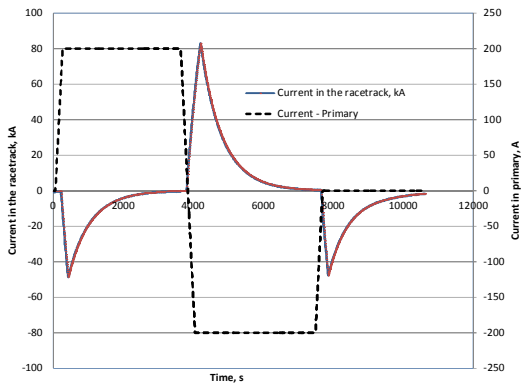

Fig. 6. Currents in the primary winding and in the racetrack.

Summary

We developed a dismountable joint with acceptably low resistance without the use of any corrosive materials that meets all ITER requirements. We tested four joints, and all were in the range of 1.5–2 nOhm, which demonstrates a mature joint assembly technology. This technology will be transferred to the ITER assembly team since these joints are assembled at the final assembly site in Cadarache, the ITER construction site.

Acknowledgments

The authors are very grateful to Russell Cornett and Scott Mathews, the Research Associates at the Magnet Development Laboratory at University of Tennessee, Knoxville, for their creative work on implementation of this project.

We appreciate electrical measurements of the joints by Adam Berryhill from Cryomagnetics, Inc., who measured both racetracks in the Joint Test Facility, located at Cryomagnetics, Inc.

We thank Dr. Wayne Reiersen for his interest, support of the project, and fruitful discussions.

References

1. N. N. Martovetsky, A. B. Berryhill, S. J. Kenney, Qualification of the Joints for the ITER Central Solenoid, *IEEE Trans.* 21(3) (June 2012) 1922–1925.
2. N. N. Martovetsky, S. J. Kenney, and J. R. Miller, Development of the Joints for ITER Central Solenoid, *IEEE Trans. Appl. Supercond.* 21(3) (June 2011) 1922–1925.

Prepared by LLNL under Contract DE-AC52-07NA27344.