LAWRENCE
LIVERMORE
NATIONAL
LABORATORY

LLNL-SR-616753

Structural Upgrade Study Building 313

X. X

February 7, 2013

Disclaimer

This document was prepared as an account of work sponsored by an agency of the United States government. Neither the United States government nor Lawrence Livermore National Security, LLC, nor any of their employees makes any warranty, expressed or implied, or assumes any legal liability or responsibility for the accuracy, completeness, or usefulness of any information, apparatus, product, or process disclosed, or represents that its use would not infringe privately owned rights. Reference herein to any specific commercial product, process, or service by trade name, trademark, manufacturer, or otherwise does not necessarily constitute or imply its endorsement, recommendation, or favoring by the United States government or Lawrence Livermore National Security, LLC. The views and opinions of authors expressed herein do not necessarily state or reflect those of the United States government or Lawrence Livermore National Security, LLC, and shall not be used for advertising or product endorsement purposes.

This work performed under the auspices of the U.S. Department of Energy by Lawrence Livermore National Laboratory under Contract DE-AC52-07NA27344.

LLNL-SR-616753

FREDERIKSEN
ENGINEERING
CONSULTING
ENGINEERS
ARCHITECTS
OAKLAND · LONG BEACH

STRUCTURAL UPGRADE STUDY
BUILDING 313
UNIVERSITY OF CALIFORNIA
LAWRENCE LIVERMORE NATIONAL LABORATORY

Livermore, California

Prepared for
University of California
Lawrence Livermore National Laboratory
Livermore, California
by
Frederiksen Engineering Co., Inc.
July 17, 1981

1755 BROADWAY, OAKLAND, CALIFORNIA 94612 415 / 465-0644 415 / 452-3970 TWX NO. 910 366 7131

FREDERIKSEN ENGINEERING
CONSULTING ENGINEERS ARCHITECTS
OAKLAND · LONG BEACH

CONTENTS

	Page
Introduction	1
Description of Structure	1
Design Criteria	2
Analysis and Design	4
Results and Recommendations	6
Cost Estimate	8

Appendix A
Calculations

Appendix B
Sketches, Specifications and Construction Drawings

Appendix C
Wind-borne Missile Impact Test Report

FREDERIKSEN ENGINEERING
CONSULTING ENGINEERS ARCHITECTS
OAKLAND · LONG BEACH

STRUCTURAL REPORT
BUILDING 313

INTRODUCTION

The intent of this study is to identify and establish whether or not the present structural design of Building 313 meets the design requirements found within this report. The building evaluation includes dynamic forces due to seismic, wind and missile. Structrual deficiencies are pointed out along with a recommended course of corrective action for repair or upgrade, with an approximate estimate of construction cost for each. Drawings, specifications and calculations are provided as part of the recommended course of corrective action.

DESCRIPTION OF STRUCTURE

Building 313, "LLNL Disaster Center" is located at Lawrence Livermore National Laboratory, Livermore, California. This building is a single story structure which measures 75'-6" long x 40'-5" wide x 12'-0" high, with a basement 27'-0" x 40'-5" x 9'-0", located close to the middle of the building. The roof framing is a metal decking on steel beams, supported by eight inches (8") of reinforced concrete walls (see Dwg. 1354-A1, A2). The slab on grade measures six inches (6") thick, and the slab over the basement is fourteen inches (14") thick with top and bottom reinforcement at both directions.

The lateral force resisting system for this building is a box-typed shear wall. Lateral forces, whether they be statically applied or dynamically induced, are transmitted by the metal roof diaphragm to the shear walls and the foundations.

DESIGN CRITERIA

Building 313 was designed and built in the sixties when seismic design criteria was low. Our objective is to evaluate and upgrade the structure to withstand the following requirements.

1. Seismic

Two levels of seismic loads are considered.

a. Using the LLNL Ground Response Spectra with a corresponding horizontal ground acceleration of 0.5g. Engineering evaluation and design are accomplished by using Uniform Building Code Analysis Method along with UBC Strength Allowables. Connection evaluation and design are accounted for an additional load factor of 1.5.

b. Using LLNL Ground Response Spectra with a corresponding horizontal ground acceleration of 0.8g. Engineering evaluation and design are accomplished by inelastic analysis method, as to insure prevention of collapse and to allow continued operation of Building 313 following an earthquake having major intensity at the site.
The maximum vertical ground acceleration shall be equal to two-thirds (2/3) of the maximum horizontal grand acceleration. The horizontal ground motion shall be considered to act simultaneously with the vertical ground motion (two-directional excitation).

2. Wind

Building 313 has to upgrade to withstand wind pressure of 110 mph or (30 psf).

3. Missile

Building 313 has to upgrade to withstand missle impact such as a 2" x 4" - 12 foot long timber, weighing 20 pounds and traveling at 70 mph.

ANALYSIS AND DESIGN

1. Seismic

A simplified three dimensional model has been set up for the dynamic analysis. (See Fig. 1) This model is assumed fixed at the base with the concrete walls replaced by the shell elements and the metal roof diaphragm replaced by the membrane elements and beams. The computer program "EASE 2" has been used for the dynamic analysis to determine the building story drift, out of plane flexure of the wall, and the shear stress of the metal roof diaphragm, with respect to the seismic level of 0.5g and 0.8g accordingly. Assume there is little cracking at the walls, four (4) percent damping is used throughout the analysis.
From the acceleration response spectra curves (See Fig. 5) the acceleration stays constant at 1.0g as the natural frequency reaches 30 hertz per cycle. This means that a building with a natural frequency less than 30 hertz per cycle responds dynamically according to the response spectra at or below the frequency of 30 hertz per cycle, and beyond that range a building can be assumed to respond statically. So in general practice, eigenvalues and eigenvectors are generated to the frequency of 30 hertz per cycle, and the percentage of total mass participated within that frequency are obtained and used for dynamic response analysis, while the remaining percentage of total mass are used for static analysis.

The results of the analysis are combined to check for maximum stress. Theoretically for a better result of analysis, the number of eigenvalues and eigenvectors has to be generated until a high percentage of total mass participated (about 90%) is obtained before running the dynamic response analysis, but it may be costly to do so. Three mode shapes have been plotted as shown at Fig. 2, 3 & 4.

The model shows no openings at the south wall, and it is planned to have several openings in the near future. In order to have the stiffness of this wall corrected for analysis, modulus of elasticity was adjusted to compensate for the future openings. Stresses obtained should not be far away from reality.

The basement wall is nine feet (9'-0") below finished grade. Horizontal and vertical dynamic soil pressure are calculated by the use of Mononobe-Okabe theory, and this has to combine with the static soil pressure for evaluting the strength of the wall.

2. Wind

Wind pressure is smaller than seismic and it is not considered in this report.

3. Missile

A wind-borne missile impact test at the roof diaphragm has been done by the Civil Engineering Department of the Lawrence Livermore National Laboratory. For test report see Appendix C.

RESULTS AND RECOMMENDATIONS

1. Seismic

Whereas Building 313 was not designed for the upgraded seismic design criteria being considered in this report, some structural deficiencies are to be expected.

From the dynamic response analysis, the weakest area is found at the metal roof diaphragm. Welded connection at the decking is not adequate for shear transfer to the east wall. Axial forces generated by seismic at the top of the wall caused buckling to the deck. In order to correct these deficiencies steel members are installed along the top of the wall together with a horizontal bracing system to replace the flexible metal diaphragm. (See Dwg. 1354-A2) With the new bracing system installed, out of plane movement at the wall is reduced and shows no overstress due to seismic forces.

Building 313 is a box-typed structure, where center of mass was located approximately at the middle of the bulding and about 8'-0" high from the ground. Overturning and sliding of the building is rarely to occur, and story drift is small as expected.

Basement wall is overstressed during seismic. A simple corrective way is to add metal plates at the inside face of wall at 5'-0" intervals. (See Dwg. 1354-A3) Shear stress is not significant at this wall. The retaining wall next to the steel stair at the north was also found overstressed. A new grade beam has to be provided on top, above the existing grade beam. (See Dwg. 1354-A4)

Future openings at the south wall shall be reinforced. (See Dwg. 1354-A6) Out of plan forces will be transmitted through the steel columns to the roof diaphragm and the foundation.

Slab over the basement:

The maximum live load capacity of this slab is 160 psf.

2. Missile

Building 313 is capable of withstanding the missile impact.

FREDERIKSEN ENGINEERING
CONSULTING ENGINEERS ARCHITECTS
OAKLAND · LONG BEACH

COST ESTIMATE FOR STRENGTHENING

Basement Wall Reinforcing

1. Plate 3/8" x 12" x 8'-6"		$ 6,250.00
2. Concrete Grade Beam:		
Demolish		5,000.00
Pour-in-place Concrete & Rebars		2,000.00
		$13,250.00
	Overhead & Profit	1,750.00
	Total	$15,000.00*

New Roof Bracing System

Bracing L 3x2x1/4		$12,000.00
C 7x9.8		
	Overhead & Profit	2,000.00
	Total	$14,000.00*

*Price includes materials and labor.

FREDERIKSEN ENGINEERING
CONSULTING
ENGINEERS
ARCHITECTS
OAKLAND · LONG BEACH

APPENDIX A

Calculations

BY _____ DATE _____ SUBJECT _____ SHEET NO. _____ OF _____
CHKD. BY _____ DATE _____ JOB NO. _____

CALCULATION INDEX

	PAGES
ROOF DIAPHRAGM & WALLS	1 - 12
BASEMENT WALLS	13 - 29
SLAB ABOVE BASEMENT	30 - 39
MISSILE IMPACT	40 - 43

BY E. pun DATE 7/81 SUBJECT LLNL SHEET NO. 1 OF 12
CHKD. BY DATE BLDG 513 JOB NO.

ROOF DIAPHRAGM

METAL DECKING SECT 3, 16 GAGE BY ROBERTSON.

SEISMIC @ TRANS. DIRECTION 0.5g.

FROM COMPUTER OUTPUT,
SHEAR STRESS: (AVERAGE)

$(1109 + 1002 + 977 + 997)\frac{1}{4} = 1021$ psi

SHEAR PER LINEAR FT @ DIAPHRAGM:

$v = 1021 \text{ psi} \times 0.0598'' \times 12''$

$v = 732.7 \text{ \#/}_1$

REQ'D SHEAR $v' = 732.7 \text{ \#/}_1 \times 1.5$

$= 1099 \text{ \#/}_1$

ALLOWABLE SHEAR $= 600 \text{ \#/} < 1099 \text{ \#/}_1$ NG.

FREDERIKSEN ENGINEERING
CONSULTING ENGINEERS ARCHITECTS
OAKLAND LONG BEACH

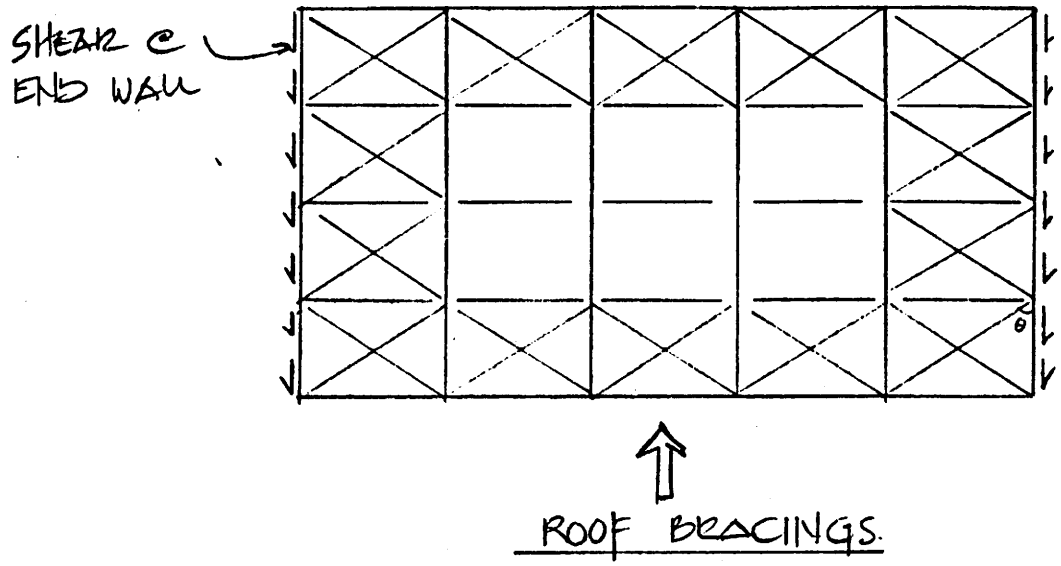

SINCE THE METAL ROOF DIAPHRAGM IS NOT ADEQUATE FOR HORIZ. SEISMIC FORCES, NEW BRACINGS ARE ADDED TO THE ROOF SYSTEM.

ASSUME BRACING MEMBERS TAKE TENSION ONLY

FOR SEISMIC @ 0.5g.

THERE ARE 4 BRACING MEMBERS TO TAKE THE HORIZ. FORCE @ EACH END WALL

TOTAL END SHEAR @ EA. WALL

$V = 1099\,\#/1 \times 40 \cong 44^k$

EACH BRACING MEMBER TAKES $= \frac{44^k}{4} = 11^k$.

TENSION @ EA. BRACING - $(\theta = \tan^{-1}\frac{16}{10} = 57.99°)$

$T = \frac{11^k}{\cos 57.99} = 20.75^k \times 1.33 = 15^k$

FREDERIKSEN ENGINEERING
CONSULTING ENGINEERS ARCHITECTS
OAKLAND LONG BEACH

BY E. Pun DATE 7/81 SUBJECT SHEET NO. 3 OF
CHKD. BY DATE JOB NO.

TRY L 3x2x1/4 $l_y = 18.8'$, $l_x = 9.4'$

$$\frac{l}{r_x} = \frac{9.4 \times 12}{0.493} = 229 < 300 \quad \text{O.K}$$

$$\frac{l}{r_y} = \frac{18.8 \times 12}{0.993} = 227 < 300 \quad \text{O.K.}$$

TENSION CAPACITY =
21.67 ksi (1.19 - 0.75×0.25) = 21.7 kips. > 15^k O.K

USE _ 2-3/4"Φ A 325X BOLT

CAPACITY OF 2-3/4"Φ A325X BOLT
SHEAR = 13.3^k × 2 = 26.6^k > 20.75^k × 1.5 × $\frac{1}{1.33}$
= 23.4^k O.K

BEARING @ GUSSET PL 3/8"
AT PL 3/8" 24.5^k > 23.4^k O.K

AT L3x2x1/4 2 × 16.3^k = 32.6^k > 23.4^k O.K

USE $\boxed{\text{L3x2x1/4 w/ 2-3/4"Φ A325X BOLTS}}$

FREDERIKSEN ENGINEERING
CONSULTING ENGINEERS ARCHITECTS
OAKLAND LONG BEACH

ROOF DIAPHRAGM (CONT.)

SEISMIC @ TRANS. DIRECTION = 0.8g.

SHEAR STRESS = (COMPUTER OUTPUT)

$(1771 + 1602 + 1561 + 1602)\frac{1}{4} = 1634$ psi

SHEAR FORCE PER LINEAR FT

$N = 1634 \times 0.059.8 \times 12 = 1173$ #/'

TOTAL SHEAR @ EA. END WALL

$V = 1173 \times 40' \approx 47^k$

EACH BRACING MEMBERS TAKES $\frac{47}{4} = 11.75^k$ say 12^k

TENSION @ EA. BRACING

$T = \frac{12}{\cos 57.99} \approx 23^k$

TENSION CAPACITY @ PLASTIC STRENGTH (L3x2x¼)

$= 36$ ksi $(1.19 - 0.75 \times 0.25)$

$= 36^k \times 0.9$ SAFE FACTOR

$= 32.5^k > 23^k$ o.k

FREDERIKSEN ENGINEERING
CONSULTING ENGINEERS ARCHITECTS
OAKLAND LONG BEACH

EAST WALL $t = 8''$

ROOF LOADING @ WALL

D.L. = ROOFING = 7 PSF
DECKING = 5 "
BEAM = 1 PSF
Σ 13 PSF $\times$ 20' = 260 #/'

L.L = 16 PSF $\times$ 20 = 320 #/'

Σ 580 #/'

WALL DL = 100 PSF $\times$ 12' = 1200 #/'

VERT. FACTOR LOAD @ WALL:

D.L. $(260 + 1200) \times 1.4 = 2.04^{k}/'$
L.L. $320 \times 1.7 = 0.54^{k}/'$
Σ $2.58^{k}/'$

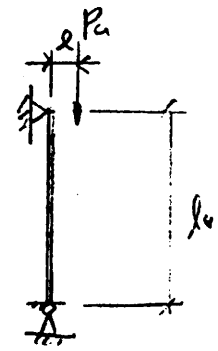

$\therefore$, $P_u = 2.58^{k}$

MIN. ECCENTRICITY $= 0.1\left(\frac{8''}{12}\right) = 0.0677'$

$M_{u/e} = 2.58^{k} \times 0.0677' = 0.17^{'k}$

MOMENT DUE TO SEISMIC = @ 0.8g (x)

$M_s = 2101^{''\#}/''$ (FROM COMPUTER)

$M_{u/s} = 2101 \times 1.7 \times 1.1 = 3.93^{'k}$

$\Sigma M_u = 0.17 + 3.93 = 4.1^{'k}$ ← center of wall

FREDERIKSEN ENGINEERING
CONSULTING ENGINEERS ARCHITECTS
OAKLAND LONG BEACH

CHECK WALL SLENDERNESS:

$$\frac{k l_u}{r} = \frac{1 \times (12 \times 12)}{0.3 \times 8} = 60 < 100.$$

APPROX. EVALUATION OF SLENDERNESS EFFECTS BY SECTION 10.11 MAY BE USED.

CALC. MOMENT MAGNIFICATION:

$$EI = \frac{E_c I_g / 2.5}{1 + \beta_d} \qquad \beta_d = 0.$$

$$E_c = 57400\sqrt{3000} = 3.14 \times 10^6 \text{ psi}$$

$$I_g = \frac{12(8)^3}{12} = 512 \text{ IN}^4$$

$$E_c I_g = 3.14 \times 10^6 \times 512 = 1.6 \times 10^9$$

$$P_c = \frac{\pi^2 EI}{(k l_u)^2} = \frac{\pi^2 \times 1.6 \times 10^9}{(12 \times 12)^2} = 765^k$$

$$\delta = \frac{C_m}{1 - (P_u / \phi P_c)}$$

$$\phi = 0.9 - 0.2 (P_u / 0.1 f_c A_g)$$

$$= 0.9 - 0.2 (2.58 / 0.1 \times 3 \times 12 \times 8)$$

$$\phi = 0.88$$

$$\therefore, \quad \delta = \frac{1}{1 - (2.58 / 0.88 \times 765)} \approx 1.0$$

$\therefore$, $M_u = 4.1 \times 1.0038 = 4.11^{IK}$

$P_u = 2.58^{K}$

COMBINE AXIAL FORCE & MOMENT:

$M_{us} = M_u + N_u(d - \frac{h}{2})$

$= 4.11 + 2.58(6.5 - \frac{8}{2}) \times \frac{1}{12}$

$= 4.65^{IK}$

$F = \frac{12 \times 6.5^2}{12000} = 0.0423$

$K_u = \frac{4.65}{0.0423} = 110.$

$a_u = 2.93$

REQ'D $A_s = \frac{M_{us}}{a_u d} - \frac{N_u}{\phi f_y}$

$= \frac{4.65}{2.93 \times 6.5} - \frac{2.58}{0.85 \times 40}$

$= 0.1683 \text{ IN}^2 < 0.2 \text{ IN}^2$ O.K.

FREDERIKSEN ENGINEERING
CONSULTING ENGINEERS ARCHITECTS
OAKLAND LONG BEACH

INTERIOR WALL BETWEEN THE NEW & OLD BUILDING

VERT. LOAD

ROOF DL = 13 psf × 14.5' = 188.5 #/'

ROOF LL = 16 psf × 14.5 = 232. #/'

WALL DL 100 psf × 12' = 1200 #/'

$P_u = (188.5 + 1200)1.4 + 232 \times 1.7 = 2.3^k/'$

MIN. ECCENTRIC MOMENT =

$M_{u/e} = 2.3 \times (0.33 + 0.065) = 0.91^{'k}$

$M_{u/s} = 3.061^{'k} \times 1.7 \times 1.1$ (FROM COMPUTER output) 0.8g.

$= 5.72^{'k}$

$\Sigma M_u = 5.72 + 0.91 = 6.63^{'k}$

FROM CALC. ABOVE, IT SHOWS THAT THE MOMENT MAGNIFICATION FACTOR δ IS VERY SMALL.

COMBINE AXIAL FORCE & MOMENT.

$M_{us} = 6.63 + 2.3(6.5 \times \frac{8}{2})\frac{1}{12}$

$M_{us} = 7.11^{'k}$

$F = \frac{12 \times 6.5^2}{12000} = 0.0423$

$K_u = \frac{7.11}{0.0423} = 168$, $a_u = 2.88$

REQ'D $A_s = \frac{7.11}{2.88 \times 6.5} - \frac{2.3}{0.85 \times 40} = 0.31 \text{ IN}^2/' \times 0.75$

$= 0.22 \text{ IN}^2/'$

THE METAL DECKING (ROBERTSON SECT 3, 16 GAGE) CANNOT TAKE MUCH OF THE AXIAL FORCES FROM THE WALL DURING SEISMIC. STEEL BEAM IS DESIGN TO TRANSFER HORIZ. LOADING FROM WALL TO THE NEW BRACING DIAPHRAGM, THEN TO SHEAR WALL.

AXIAL LOADING @ THE METAL DECKING:

SEISMIC LEVEL @ 0.5g @ LONG. DIRECTION

AXIAL STRESS @ DECK

$$(213 + 585 + 594 + 251)\frac{1}{4} = 410.75\ \#/in^2$$

AXIAL FORCE =

$$410.75 \times 0.0598 \times 12 = 294.75\ \#/ft.$$

DESIGN STEEL BEAM TO TAKE LOADING OF 295 #/1

$$M_{0.5g} = 0.295\ \#/1 \times \frac{10^2}{8} = 3.69^{IK}$$

SEISMIC @ 0.5g @ TRANS. DIRECTION

AXIAL STRESS @ DECK

$$(132 + 332 + 399 + 365 + 172)\frac{1}{5} = 280\ psi$$

AXIAL FORCE =

$$280 \times 0.0598 \times 12 = 201\ \#/1$$

$$M = 0.201 \times \frac{16^2}{8} = 6.43^{IK}$$

FREDERIKSEN ENGINEERING
CONSULTING ENGINEERS ARCHITECTS
OAKLAND LONG BEACH

BY E. bun DATE 1/81 SUBJECT SHEET NO. 10 OF
CHKD. BY DATE JOB NO.

SEISMIC @ LONG. DIRECTION = 0.8g. (X)

AXIAL STRESS @ DECK

$(342 + 936 + 950 + 402)\frac{1}{4} = 657.5$ psi

AXIAL FORCE:

$657.5 \times 0.0598 \times 12 = 472$ #/ft

$M = 0.472 \times \frac{10^2}{8} = 5.9^{IK}$

SEISMIC @ TRANS. DIRECTION = 0.8g (Z)

AXIAL STRESS: @ DECK

$(210 + 532 + 637 + 583 + 274)\frac{1}{5} = 447.2$ psi

AXIAL FORCE

$447.2 \times 0.0598 \times 12 = 321$ #/1

$M = 0.321 \times \frac{16^2}{8} = 10.27^{IK}$

FREDERIKSEN ENGINEERING
CONSULTING ENGINEERS ARCHITECTS
OAKLAND LONG BEACH

0.5g. @ TRANS. DIRECTION (Z)

$M = 6.43^{'K}$ (ELASTIC)

REQ'D $S = \frac{6.43 \times 12}{21.67} = 3.56 \text{ IN}^3$

USE C X

$f_b = \frac{3.56 \times 12}{4.38} = 9.75$ ksi O.K.

REACTION, $R = 201^{\#}/_{1} \times \frac{16}{2} = 1.6^{k} \times 1.5 \times 1.33$
$= 1.8^{k}$

CONNECTION = USE $\frac{3}{16}$" WELD

4" - $\frac{3}{16}$ WELD GIVES

$= \frac{3}{16} \times 0.707 \times 21.6 \times 4" = 11.45^{k}$ O.K.

FREDERIKSEN ENGINEERING
CONSULTING ENGINEERS ARCHITECTS
OAKLAND LONG BEACH

Seismic @ girder

$M_x = 133.4$ "K (strong axis) $F_y = 36$ ksi

$M_y = 0.167$ "K (weak axis)

$P = 2715$ #

Static load = 7 psf (Roofing) + 5 psf (decking) + 1 psf (Beam) = 13 psf

L.L = 20 psf (w/ Reduction, See Table 23-C, Page 139 UBC) = 16

Total load = 29 psf

Span = 15'-9"

$w = 29 \text{ psf} \times 15.75 \text{ ft} = 457$ #/ft

$$M = \frac{wl^2}{8} = \frac{457 \text{ \#/ft} \times 40^2 \text{ ft}}{8} = 91.4 \text{ K'}$$

$$M_T = 133.4 \text{ K''}/12 + 91.4 \text{ K'} = 102.52 \text{ K'}$$

$$I = \tfrac{1}{12}bh^3 + Ad^2 = \tfrac{1}{12}(6'')(18)^3 - 2\left[\tfrac{1}{12}(2.875 \times 17^3)\right] = 562 \text{ in}^4$$

$$f_s = \frac{MC}{I} = \frac{(102.52 \text{ K'})(12)(9'')}{562 \text{ in}^4} = 19.7 \text{ ksi} < F_s = .6F_y = 21.6 \text{ ksi OK}$$

$$f_v = \frac{VQ}{Ib}$$

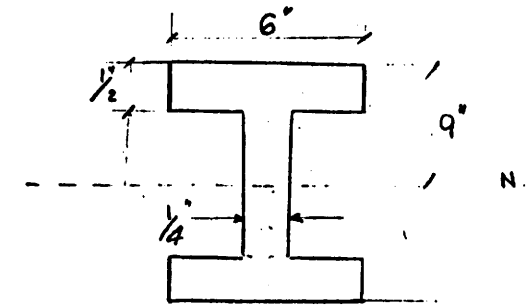

$$Q = (3 \text{ in}^2 \times 8.75'') + (2.125 \text{ in}^2 \times 4.25'') = 35.28 \text{ in}^3$$

$$f_v = \frac{\tfrac{1}{2}(457 \text{ \#/ft} \times 40 \text{ ft})(35.28 \text{ in}^3)}{(562 \text{ in}^4)(1/4'')} = 2.3 \text{ ksi}$$

$$f_v = \frac{V}{dt_w} = \frac{\tfrac{1}{2}(457 \times 40)}{18'' \times 1/4''} = 2.08 \text{ ksi}$$

FREDERIKSEN ENGINEERING
CONSULTING ENGINEERS ARCHITECTS
OAKLAND LONG BEACH

BASEMENT WALL

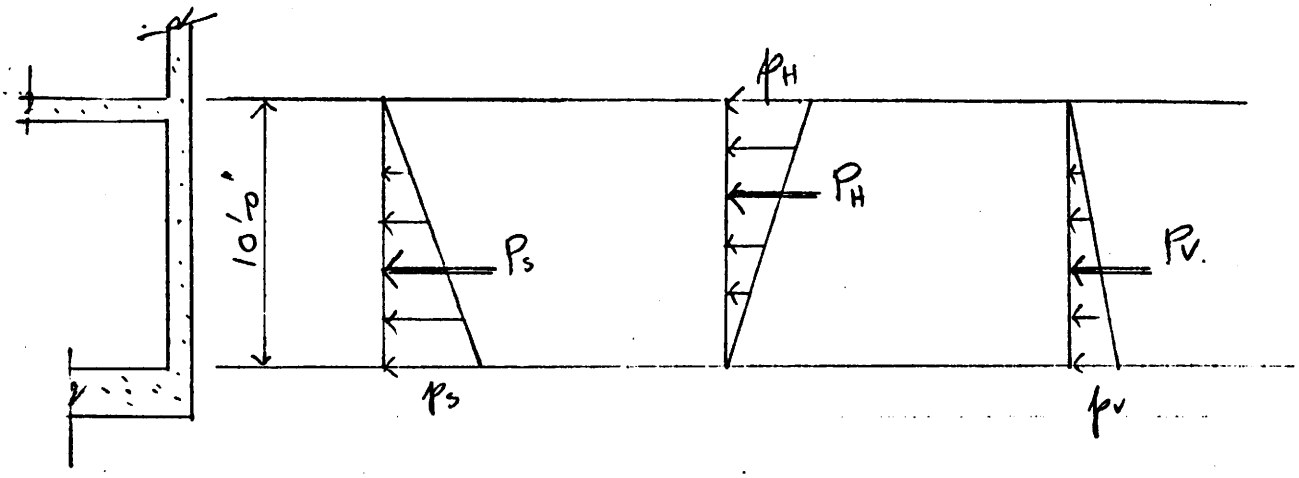

A. STATIC SOIL PRESSURE

B. HORIZ. DYN. LAT. PRESSURE

C. VERT DYN LAT. PRESSURE

A. STATIC SOIL PRESSURE, p_s

$$p_s = k_o \cdot \gamma \cdot H$$

$$P_s = \frac{1}{2} k_o \gamma H^2$$

B. HORIZ. DYNAMIC LATERAL PRESSURE, p_H (REF. MONONOBE-OKABE THEORY)

$$p_H = \gamma H (1 - a_v) K_{AE}$$

$$P_H = \frac{1}{2} \gamma H^2 (1 - a_v) K_{AE}$$

C. VERT. DYNAMIC LATERAL PRESSURE, p_V (REF. MONONOBE-OKABE THEORY)

$$p_V = \gamma \cdot H K_A (\pm a_v)$$

$$P_V = \frac{1}{2} \gamma H^2 K_A (\pm a_v)$$

WHERE

$\gamma = 120\ lb/ft^3$, $H = 10\ ft$

$k_o = 0.7$

a_v = VERTICAL GROUND ACCELERATION $= \frac{2}{3} a_H$

a_H = HORIZ. GROUND ACCELERATION.

$$K_{AE} = \frac{\cos^2(\phi - \theta - \beta)}{\cos\theta \cos^2\beta \cos(\delta + \beta + \theta)\left[1 + \sqrt{\frac{\sin(\phi + \delta)\sin(\phi - \theta - i)}{\cos(\delta + \beta + \theta)\cos(i - \beta)}}\right]^2}$$

$$\theta = \tan^{-1} \frac{a_H}{1 - a_v}$$

ϕ = ANGLE OF FRICTION OF SOIL $= 30°$

δ = ANGLE OF WALL FRICTION $= 20°$

i = SLOPE OF GROUND SURFACE BEHIND WALL $= 0$

β = SLOPE OF BACK OF WALL TO VERTICAL $= 0$

$K_A = K_{AE}$ BUT SET $\theta = 0$

FREDERIKSEN ENGINEERING
CONSULTING ENGINEERS ARCHITECTS
OAKLAND LONG BEACH

CASE #1

$a_H = 0.5g.$

$a_V = \frac{2}{3} \times 0.5g = 0.33g.$

A. STATIC SOIL FORCE, P_S.

$p_S = 0.7 \times 120 \times 10 = 840$ #/ft

$P_S = \frac{1}{2} \times 10 \times 840 = 4200$ #/1

B. HORIZ. DYN. LATERAL FORCE, P_H

$\theta = \tan^{-1} \frac{0.5}{1 \pm 0.33} = 36.73^\circ$ OR 20.60°

$$K_{AE} = \frac{\cos^2(30-20.60)}{\cos 20.6 \cos(20+20.6)\left[1+\sqrt{\frac{\sin(30+20)\sin 30-20.6)}{\cos(20+20.6)}}\right]^2}$$

$= 0.69$

$\therefore p_H = 120 \times 10 (1 - 0.33) 0.69 = 557.13$ #/ft

$P_H = \frac{1}{2} \times 10 \times 557.13 = 2785.65$ #/1

BY E. Dim DATE 7/81 SUBJECT SHEET NO. 16 OF
CHKD. BY DATE JOB NO.

C. VERT DYN. LATERAL FORCE, P_v

$$K_A = \frac{\cos^2 30}{\cos 20 \left[1 + \sqrt{\frac{\sin(30+20)\sin 30}{\cos 20}}\right]^2} = 0.2973$$

$$\therefore p_v = 120 \times 10 \times 0.2973 \times 0.33 = \underline{117.74}\ \#/\text{ft}$$

$$P_v = \frac{1}{2} \times 10 \times 117.74 = 588.68\ \#/\text{ft}$$

FREDERIKSEN ENGINEERING
CONSULTING ENGINEERS ARCHITECTS
OAKLAND LONG BEACH

CASE #2

HORIZ. GROUND ACCELERATION

$a_H = 0.8g.$

VERT GROUND ACCELERATION

$a_V = 0.8g \times \frac{2}{3} = 0.533\ g.$

A. STATIC SOIL FORCE, P_S

$P_S = 4200\ \#/'$

B. HORIZ. DYN. LATERAL FORCE, P_H

ASSUME $\beta = 0$, $i = 0$ $\phi = 30°$ $\delta = 20°$

$$\theta = \tan^{-1}\frac{0.8}{1 \pm 0.533} = 27.56° \text{ OR } 59.74°$$

$$K_{AE} = \frac{\cos^2(30-27.56)}{\cos 27.56 \cos^2 0 \cos(20+27.56)\left\{1+\left[\frac{\sin(30+20)\sin(30-27.56)}{\cos(20+27.56)\cos 0}\right]^{1/2}\right\}^2}$$

$= 1.1211$

$\therefore P_H = 120 \times 10 \times (1-0.533)1.1211 = 627.8\ \#/'$

$P_H = \frac{1}{2} \times 10 \times 627.8 = 3139.0\ \#/'$

FREDERIKSEN ENGINEERING
CONSULTING ENGINEERS ARCHITECTS
OAKLAND LONG BEACH

CASE #2 (CONT.)

c. VERT. DYN. LATERAL FORCE, P_V

$p_v = 120 \times 10 \times 0.2973\ (0.533) = 190.15\ \#/\text{in}'$

$P_V = \frac{1}{2} \times 10 \times 190.15 = 950.77\ \#/_1$

CASE #1 (0.5 g)

LOADING @ BASEMENT

$U = 0.75(1.7H + 1.7 \times 1.1E)$

$w_{uA} = 557.13 \times 1.7 \times 1.1 = 1042\ \#/'$

$w_{uB} = (840 \times 1.7) + (117.74 \times 1.7 \times 1.1) = 1648\ \#/'$

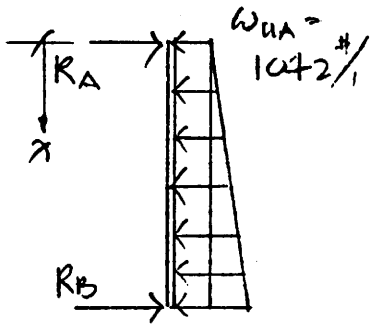

$w_{uB} = 1042 + 606 = 1648\ \#/'$

$R_A = 1042 \times \frac{10}{2} + 606 \times \frac{10}{2 \times 3} = 6220^{\#}$

$R_B = 13450 - 6220 = 7230^{\#}$

ZERO SHEAR @ x FROM R_A

$R_A - 1648x - \frac{60.6x^2}{2} = 0$

$6220 - 1648x - 30.3x^2 = 0$

$x = 3.54'$

$M_{max} = 6220 \times 3.54' - 1042 \times \frac{3.54^2}{2} - 214.73 \times \frac{3.54^2}{3 \times 2}$

$= 15027.86^{\#} = 15^{IK}/'$

$0.75(15) = 11.25^{IK}$

MOMENT CAPACITY:

$f'_c = 3000$ psi, $d = 10'' - 1 = 9'$ $A_s = 0.2\ IN^2$

$M_u = 3A_s d - 1.96 A_s^2$

$= 3 \times 0.2 \times 9 - 1.96 \times 0.2^2$

$= 5.32^{IK} \times 1.33 = 7.08^{IK} \ll 15^{IK}$ N.G.

FREDERIKSEN ENGINEERING
CONSULTING ENGINEERS ARCHITECTS
OAKLAND LONG BEACH

CHECK SHEAR

$V_u = 7230^{\#}$

$$v = \frac{V_u}{\phi bd} = \frac{7230}{0.85 \times 12 \times 9} = 79 \text{ psi}$$

ALLOWABLE SHEAR $= 2\sqrt{3000} = 109. \text{ psi} > 79$

O.K.

CASE #2 (0.8 g)

$U = 0.75\,(1.7H + 1.7 \times 1.1E)$

$w_{u_A} = 627.8 \times 1.7 \times 1.1 = 1174\ \#/'$

$w_{u_B} = 840 \times 1.7 + 190.15 \times 1.7 \times 1.1 = 1784\ \#/'$

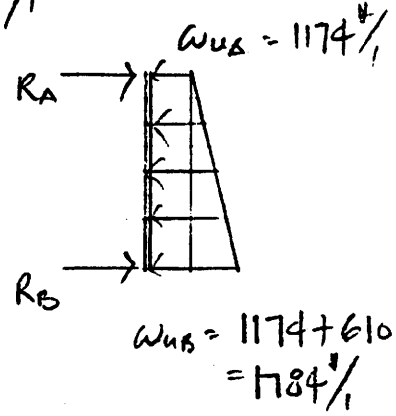

$R_A = 1174 \times \frac{10}{2} + 610 \times \frac{10}{2 \times 3} = 6887\ \#$

$R_B = 14790 - 6887 = 7903\ \#$

ZERO SHEAR @ X FROM R_A

$6887 - 1784x - \frac{61.0}{2}x^2 = 0$

$6887 - 1784x - 30.5x^2 = 0$

$x = 3.63'$

$M_{u\,max} = 6887 \times 3.63 - 1174 \times \frac{3.63^2}{2} - 221.7 \times \frac{3.63^2}{3 \times 2}$

$= 16788.8'^{\#} = \underline{16.8'^{k}}$

MOMENT CAPACITY

$M_u = 7.08'^{k} \ll 16.8'^{k}$ N.G

SHEAR

$v = \frac{7903}{0.85 \times 12 \times 9} = 86\ psi < 109.\ psi$ o.k.

FREDERIKSEN ENGINEERING
CONSULTING ENGINEERS ARCHITECTS
OAKLAND LONG BEACH

$f'_c = 3000$ Psi using $\frac{3}{8}$" x 12" plates & 1" dia bolts

$f_y = 36000$ Psi

$A_s = (\frac{3}{8}" \times 12") - 2(1" + \frac{1}{8}")(\frac{3}{8}") = 3.66 \text{ in}^2$

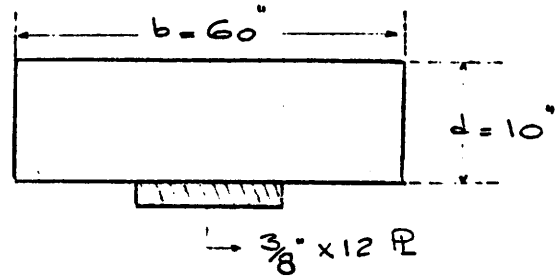

$A_s = \rho b d$

$3.66 \text{ in}^2 = \rho \times 60" \times 10"$

$\rho = 0.0061$

$$m = \frac{f_y}{.85 f'_c} = \frac{36000}{.85 \times 3000} = 14.12$$

$$R_u = \rho f_y (1 - \frac{1}{2}\rho m) = 0.0061 \times 36{,}000 (1 - \frac{1}{2} \times 0.0061 \times 14.12) = 210 \text{ Psi}$$

$$M_n = R_u b d^2 = 210 \text{ Psi } (60")(10)^2 (1/12000) = 105 \text{ K}'$$

$$M_u = \phi M_n = .9 \times 105 \text{ K}' = 94.6 \text{ K}'$$

$M_u = 94.6$ K' > 15 K'/ft x 5' = 75 K' OK (Case 1)

$M_u = 94.6$ K' > 16.8 K'/ft x 5' = 84 K' OK (Case 2)

FREDERIKSEN ENGINEERING
CONSULTING ENGINEERS ARCHITECTS
OAKLAND LONG BEACH

$f'_c = 3000$ psi

A-36 Steel $\Rightarrow f_y = 36000$ psi

$A_s = 4.5 \text{ in}^2$

$n = \frac{n_s}{n_c} = \frac{29}{3} = 9.67$

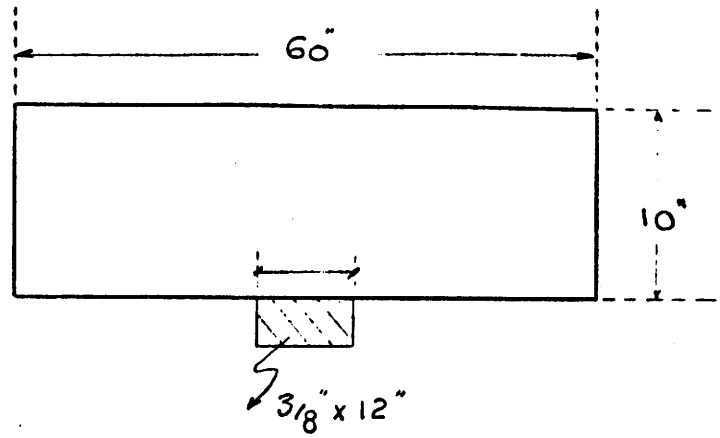

Transformed Area:

$A = 12'' \times (3/8'' \times 9.67)$

$= 12'' \times 3.63 = 43.56 \text{ in}^2$

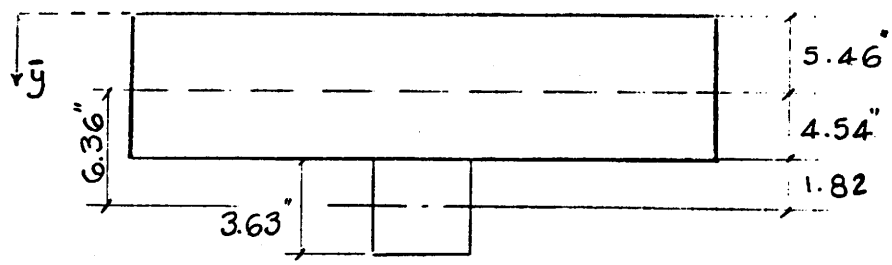

$$\bar{y} = \frac{(60'' \times 10'' \times 5'') + 43.56\,(10 + 3.63/2)}{(10'' \times 60'') + (3.63'' \times 12'')} = 5.46''$$

$$I = \tfrac{1}{12}(60 \times 10^3) + (60 \times 10)(.46)^2 + \tfrac{1}{12}(12 \times 3.63^3) + 43.56\,(6.36)^2$$

$= 6{,}937 \text{ in}^4$

$Q = A \cdot y = (12'' \times 3.63'')(6.36'') = 277 \text{ in}^3$

$$f_v = \frac{VQ}{I} = \frac{20600^{\#}(277 \text{ in}^3)}{6937 \text{ in}^4} = 822.6 \text{ \#/in} \times 12 \times 1/1000 = 9.87 \text{ K/ft}$$

$f_v = 9.87 \times 1.5 = 14.81$ K/ft

FREDERIKSEN ENGINEERING
CONSULTING ENGINEERS ARCHITECTS
OAKLAND LONG BEACH

BY B.M. DATE 7/17 SUBJECT LLNL SHEET NO. 24 OF
CHKD. BY DATE JOB NO.
BLDG 313

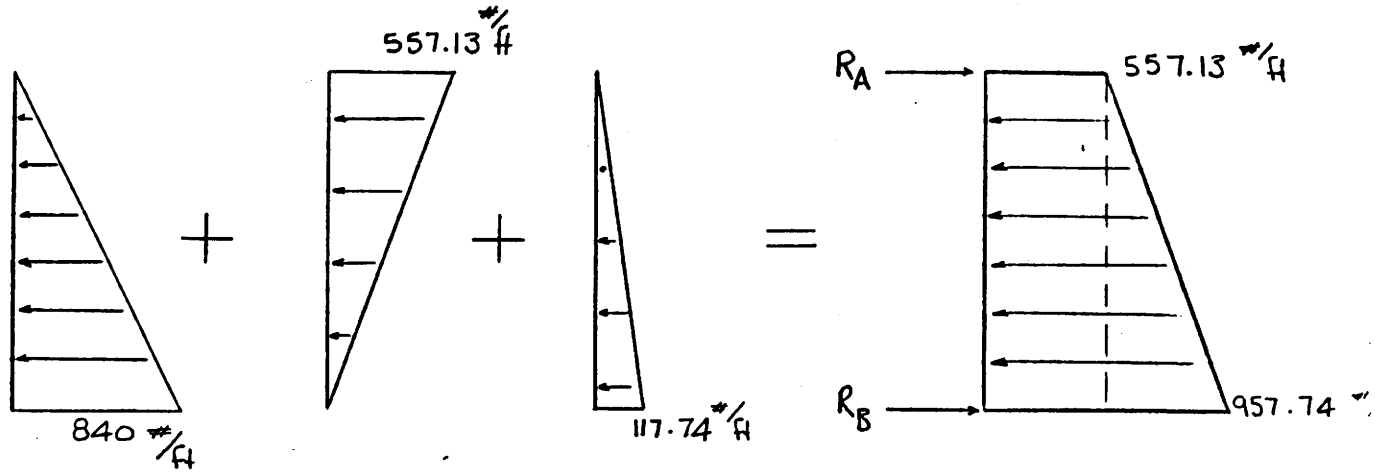

$$R_A = \tfrac{1}{2}(557.13 \times 10') + \frac{400.16 \times 10}{2 \times 3} = 3453 \ \#/ft$$

$$R_B = (557.13 \times 10) + (400.16 \times 10 \times \tfrac{1}{2}) - 3453 = 4120 \ \#/ft$$

$$V = 4120 \ \#/ft \ (5 ft) = 20600 \ \#$$

$$f_v = \frac{20600^{\#}(277 in^3)}{6937 \ in^4} = 822.6 \ \#/in \times 12 \times 1/1000 = 9.87 \ k/ft \times 1.5 = 14.81$$

FREDERIKSEN ENGINEERING
CONSULTING ENGINEERS ARCHITECTS
OAKLAND LONG BEACH

Bolts:

Use "PHILLIPS RED HEAD" 7/8" Φ

Shear Capacity = 27000 #/bolt, with a safe working load of 25%

$= 27000 \times 1/4 \times 1/1000 = 6.75$ K/bolt

Seismic factor = 1.33

Shear Capacity $= 1.33 \times 6.75 = 8.98$ K/bolt

Spacing $= \dfrac{8.98^{K}}{14.81\ ^{K}/_{ft}} = 0.61$ bolt/ft $\times 12 = 7.28$ bolt/in

Use 6" Spacing

CASE 2. HORIZ. GROUND ACCELERATION (0.8g) (CONTROL)

LOADING @ WALL

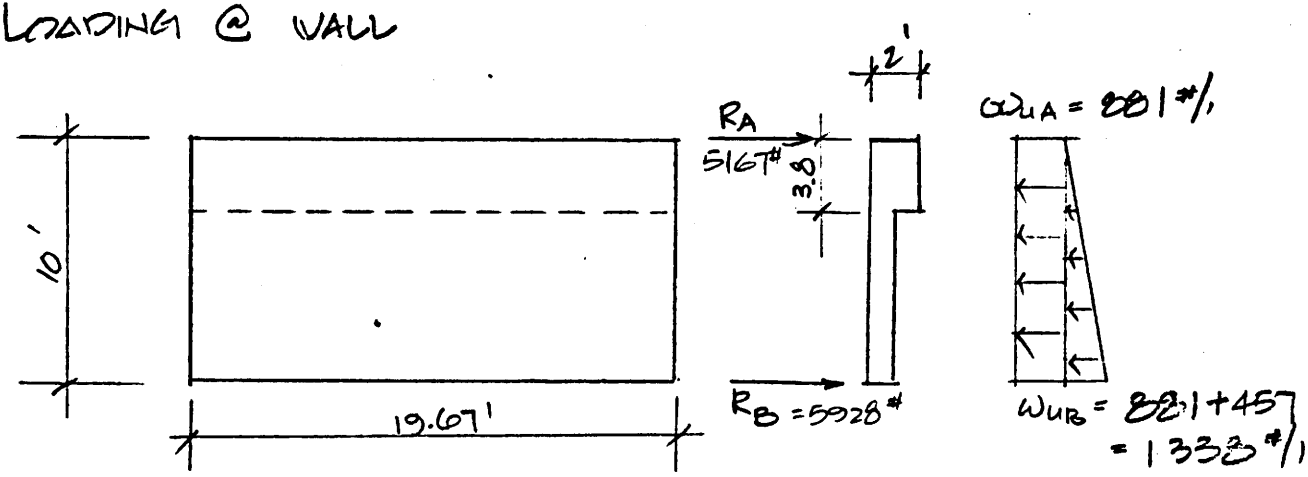

(WALL) ELEV. SECTION.

$U = 0.75\,(1.7\,p_S + 1.7 \times 1.1\,p_H)$.

$p_S = 840$ #/' $p_V = 190.15$ #/'

$p_H = 627.8$ #/'

$w_{uA} = 0.75\,(627.8\text{ \#/'} \times 1.7 \times 1.1) = 881$ #/'

$w_{uB} = 0.75\,(840 \times 1.7 + 190.15 \times 1.7 \times 1.1) = 1338$ #/'

$$R_A = \frac{(881)(10')}{2} + \frac{\frac{1}{2}(457)10'}{3} = 5167\ \#$$

$$R_B = \frac{881\,(10)}{2} + 2285 \times \frac{2}{3} = 5928\ \#$$

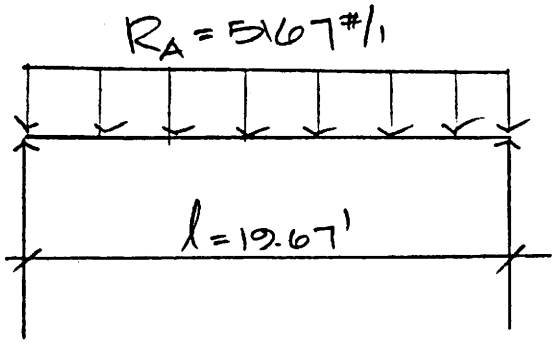

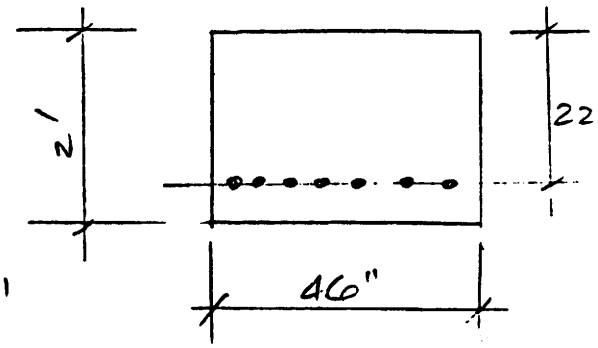

$$M_{u_E} = \frac{R_A l^2}{8} = \frac{(5167)(19.67)^2}{8} = 250^{k-1}$$

ASSUME $f'_c = 3ksi$ $f_y = 40ksi$

$$F = \frac{bd^2}{12{,}000} = \frac{46(22)^2}{12{,}000} = 1.86$$

$$K_u = \frac{M_u}{F} = \frac{250^{k-1}}{1.86} = 134.4$$

$$\rho = 0.004$$

$$A_s = \rho bd = 0.004(46) \times 22 = 4.04 \text{ in}^2.$$

USE $5\#8$ & $2-\#7$

$A_s = 3.93 \text{ in}^2 + 1.20 = 5.13 \text{ in}^2.$

CHECK LIMITS: ρ.

$\rho = 0.004$

$\rho_b = 0.85^2 \frac{f'_c}{f_y} \frac{87}{87+f_y} = = 0.85^2 \frac{3}{40} \frac{87}{127} = 0.0371$

$\rho_{max} = 0.75\,\rho_b = 0.75\,(0.0371) = 0.0278 > 0.004$ (O.K)

CHECK BEAM SHEAR:

$R_b = 5928^{\#}$

$v = \frac{R_b}{\phi bd} = \frac{5928}{0.85(46)(22)} = 6.89$ psi

ALLOWABLE SHEAR $= 2\sqrt{f'_c} = 2\sqrt{3000} = 109$ psi > 6.89 (O.K)

BY R. CHAN DATE 7/81 SUBJECT SHEET NO. 29 OF
CHKD. BY DATE JOB NO.

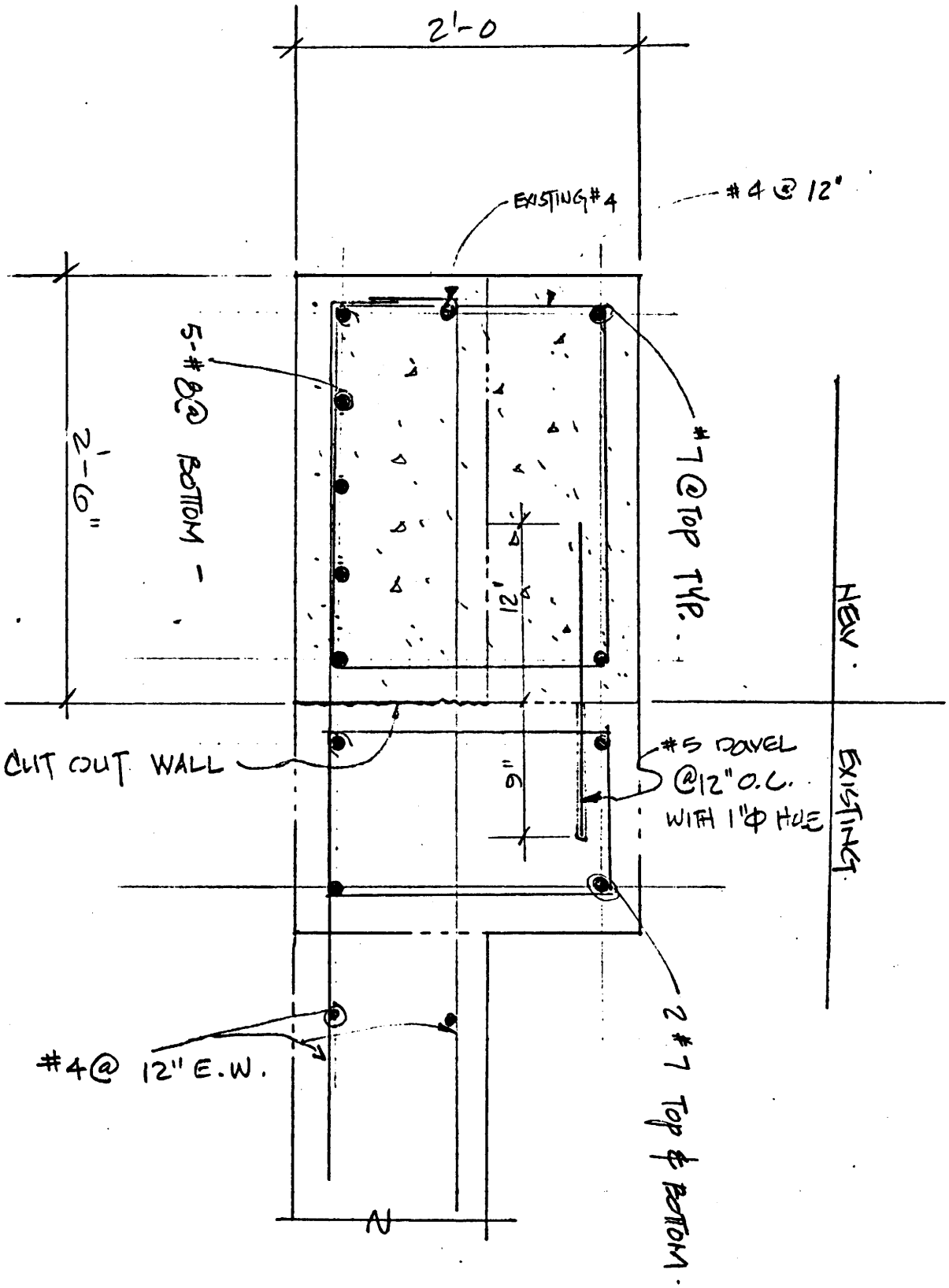

SECTION

FREDERIKSEN ENGINEERING
CONSULTING ENGINEERS ARCHITECTS
OAKLAND LONG BEACH

SLAB CAPACITY OVER BASEMENT

GENERAL ASSUMPTIONS

(1) ASSUME COL HINGE AT TOP, BECAUSE THE COL STIFFNESS IS VERY SMALL WHEN COMPARE WITH SLAB-BEAM STIFFNESS.

(2) THE DISTRIBUTION OF PANEL MOMENTS ARE BASED ON U.B.C. SECTION 2613(d)

(3) CONCETE STRENGTH $f_c' = 3{,}000$ PSI
REINF. STEEL $f_y = 40{,}000$ PSI

CHECK C1, C2

USE $1^k/LF$ LOADING
TO FIND C_k

$$M = C_k w l^2$$

FREDERIKSEN ENGINEERING
CONSULTING ENGINEERS ARCHITECTS
OAKLAND LONG BEACH

BY A. SETO DATE ..... SUBJECT LLNL SHEET NO. 31 OF .....
CHKD. BY ..... DATE ..... JOB NO. .....
BLDG 313

C 1, C 2

CASE 1.

$$F.E.M = \frac{wl^2}{8} = \frac{11(10.5)^2}{8} = 13.78$$

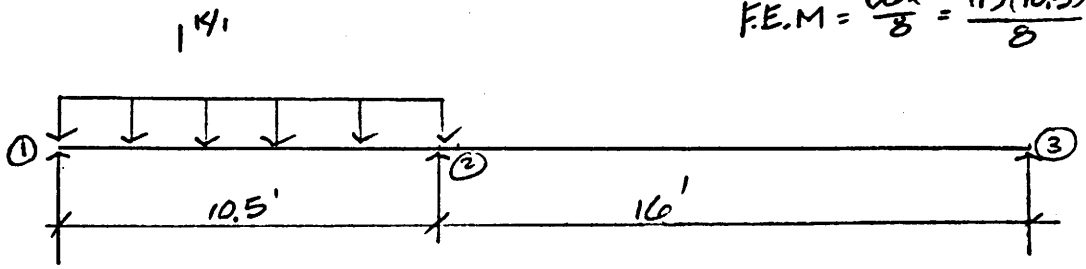

	1	2		3
D.F.		0.4	0.6	
F.E.M.	0	+13.78	0	0
		-5.51	-8.27	
		+8.27	-8.27	

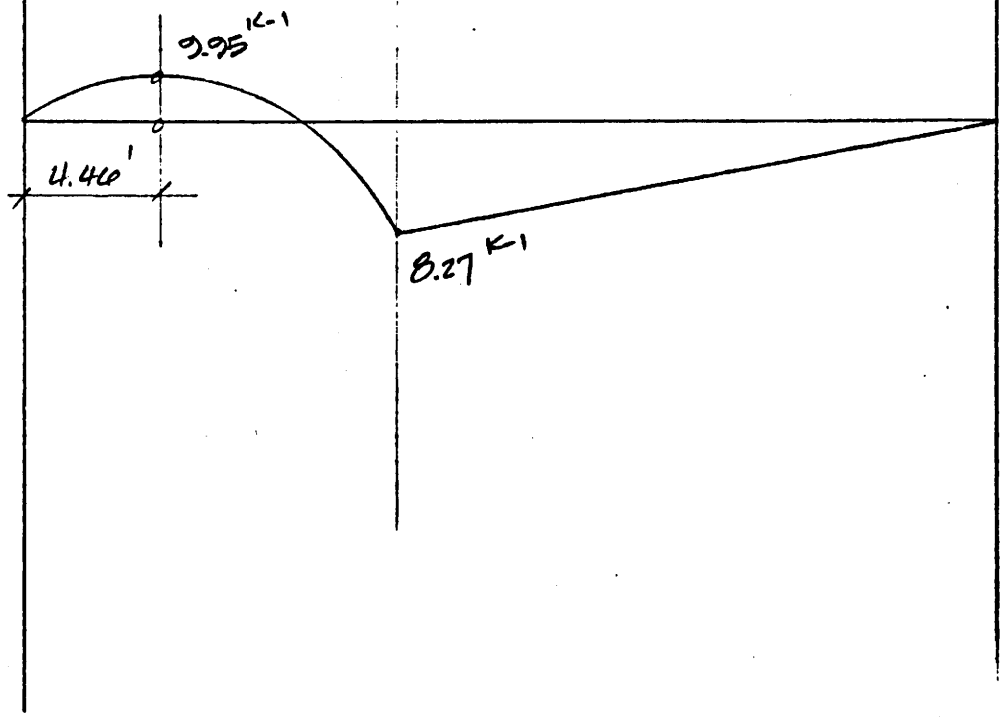

FREDERIKSEN ENGINEERING
CONSULTING ENGINEERS ARCHITECTS
OAKLAND LONG BEACH

BY A. SETO DATE _____ SUBJECT LLNL SHEET NO. 32 OF _____

CHKD. BY _____ DATE _____ JOB NO. _____

BLDG 313

C1, C2

CASE 2.

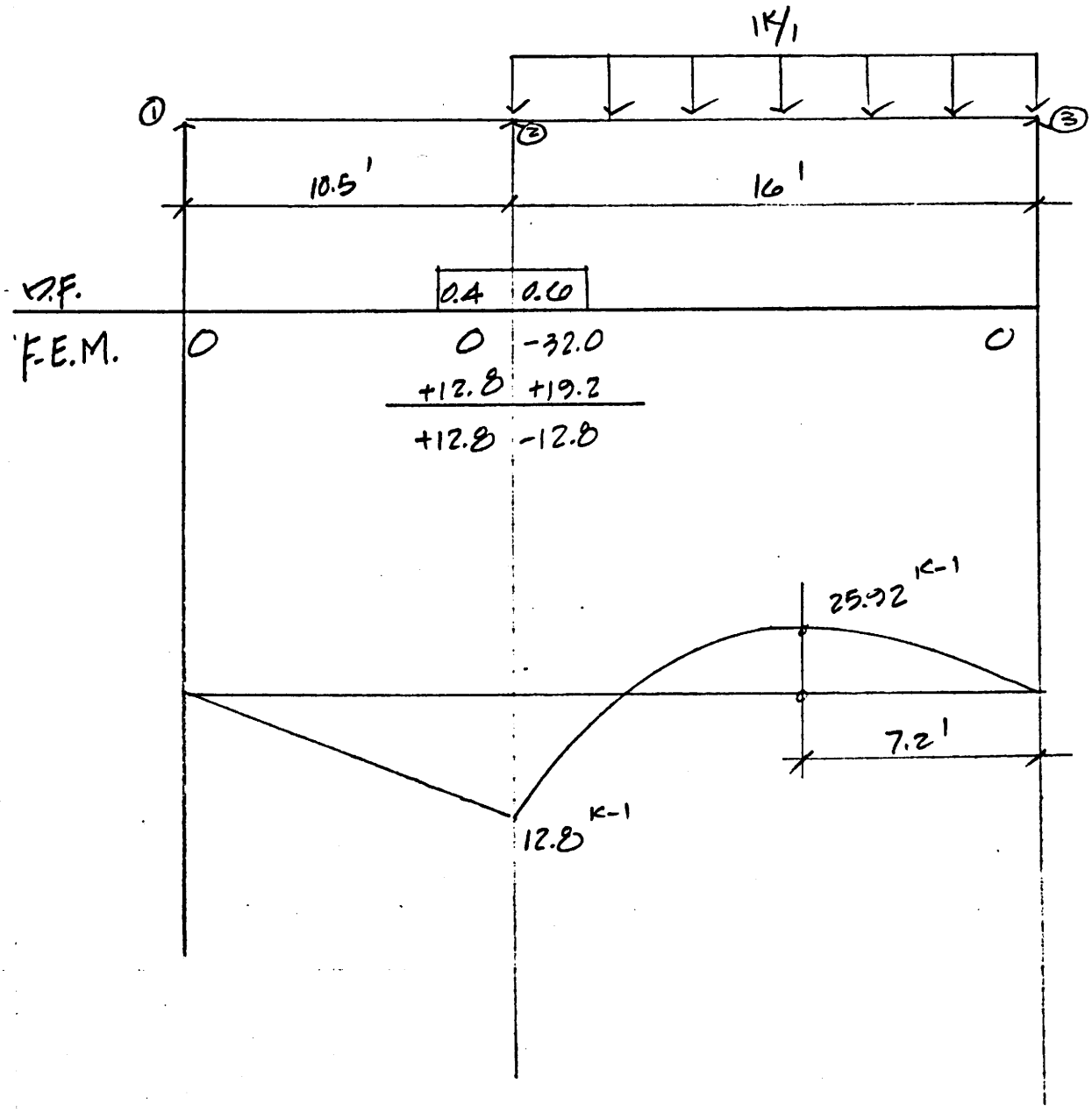

FREDERIKSEN ENGINEERING
CONSULTING ENGINEERS ARCHITECTS
OAKLAND LONG BEACH

BY A. SETO DATE _____ SUBJECT L L N L SHEET NO. 33 OF _____

CHKD. BY _____ DATE _____ JOB NO. _____

BLDG 313

C1, C2

CASE 1. + 2.

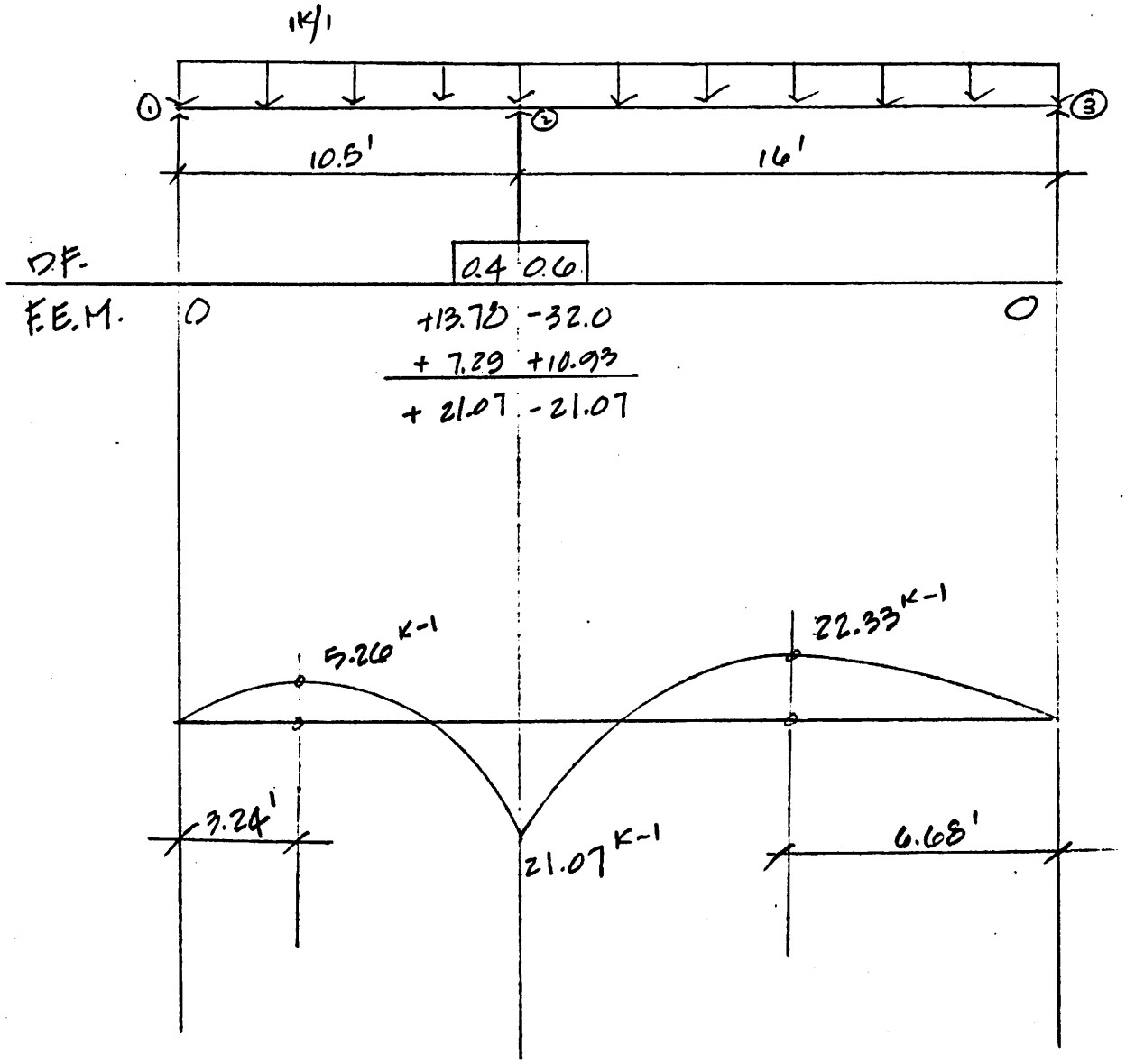

FREDERIKSEN ENGINEERING
CONSULTING ENGINEERS ARCHITECTS
OAKLAND LONG BEACH

C5, C7

CASE 1.

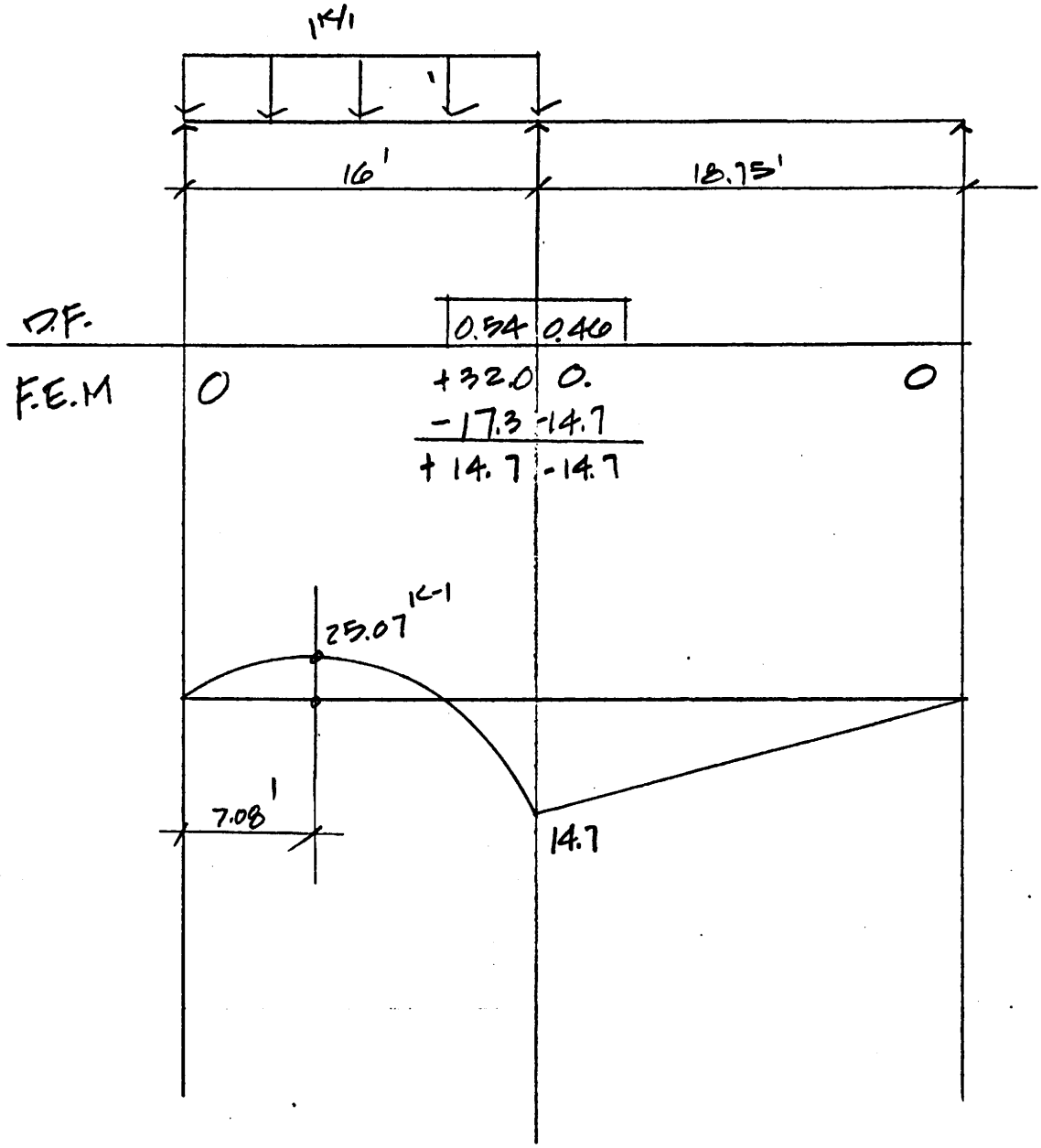

FREDERIKSEN ENGINEERING
CONSULTING ENGINEERS ARCHITECTS
OAKLAND LONG BEACH

BY A. SETO DATE ..... SUBJECT LLNL SHEET NO. 35 OF .....

CHKD. BY ..... DATE ..... JOB NO. .....

BLDG 313

CS, C7

CASE 2.

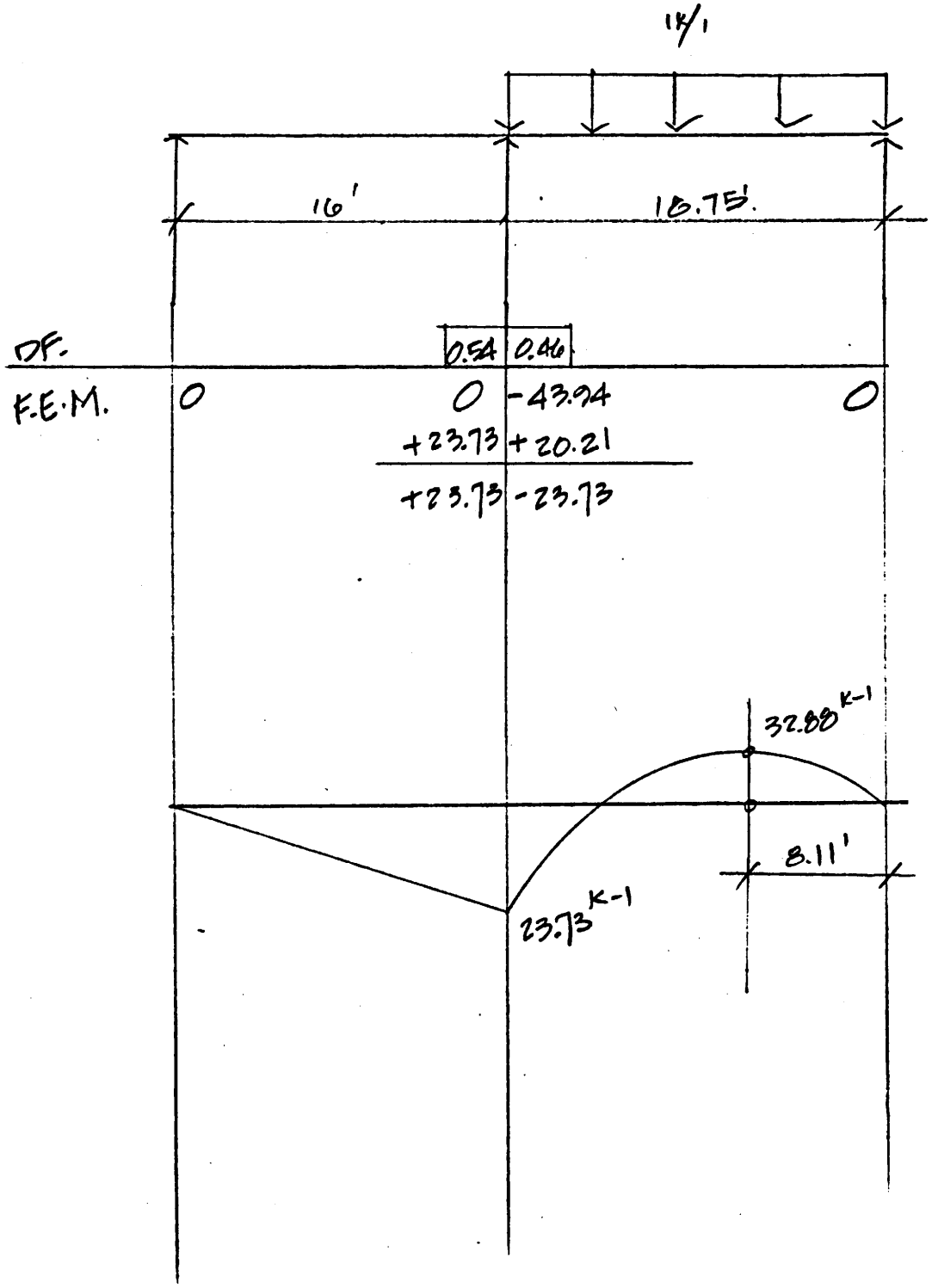

FREDERIKSEN ENGINEERING
CONSULTING ENGINEERS ARCHITECTS
OAKLAND LONG BEACH

BY A. SETO DATE _____ SUBJECT LLNL SHEET NO. 36 OF _____

CHKD. BY _____ DATE _____ JOB NO. _____

BLDG 313

C5, C7

CASE 1 + 2.

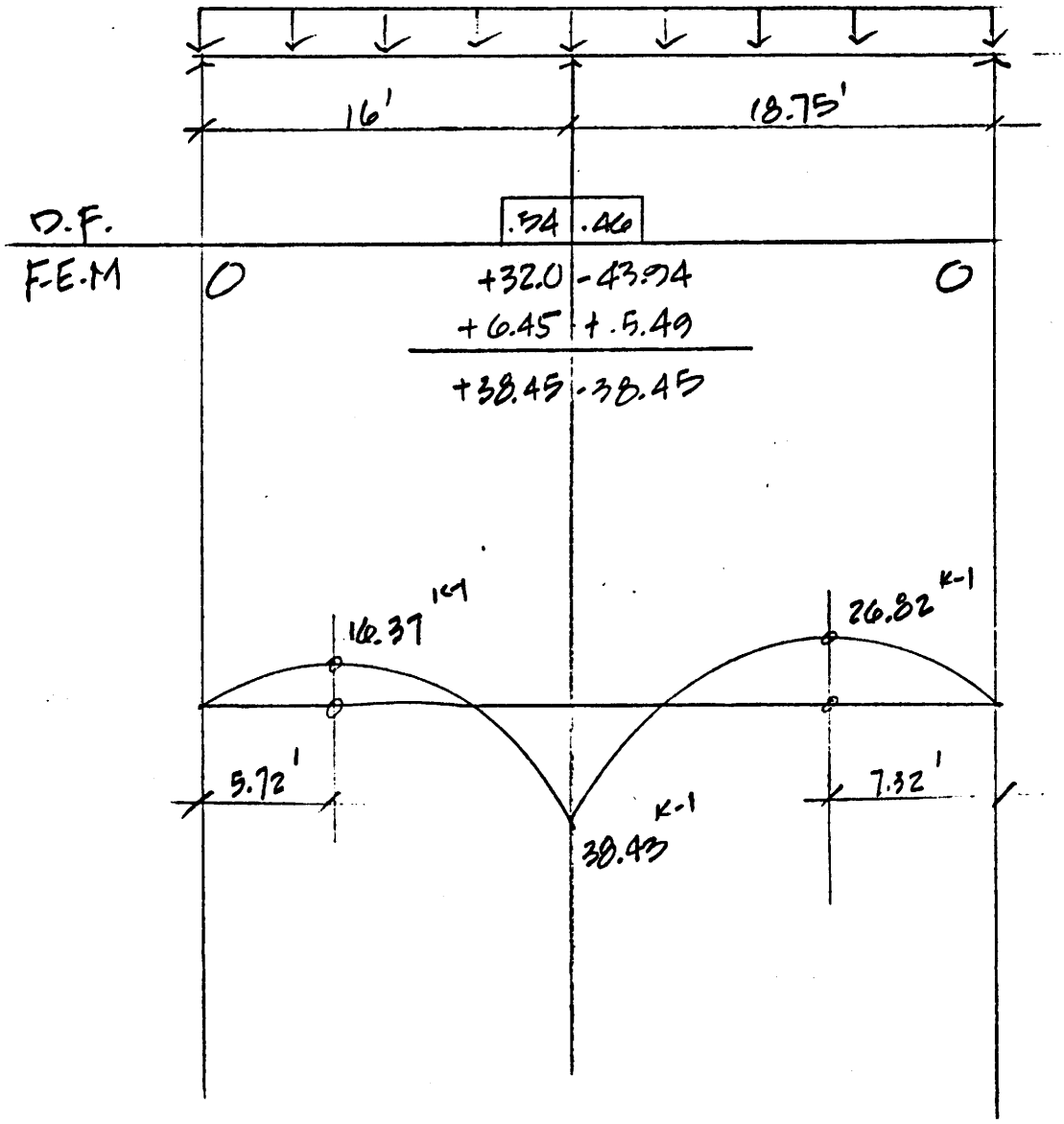

FREDERIKSEN ENGINEERING
CONSULTING ENGINEERS ARCHITECTS
OAKLAND LONG BEACH

MAX. MOMENT = 25.92 'K (Case 2)

$$C_k = \frac{25.92}{(16)^2} = 0.1$$

C5, C7

MAX MOMENT = 38.43 'K

$$C_k = \frac{38.43}{(18.75)^2} = 0.11 \leftarrow \text{GOVERNS}$$

MOMENT CAPACITY

C1, C2

$A_s = 0.41 \square''$ (#5 @ 9")

$d = 11 - 1.5 = 9.5''$ (WHEN D = 11")

$M_u = 3.0 A_s d - 2.35 A_s^2$ (ACI HANDBOOK TABLE 7.1.2)

$= 3.0(0.41 \times 9.5) - 2.35(0.41)^2$

$= 11.29$ 'K/' (CRITICAL AT COL SUPPORT)

M_u @ COL STRIP $= \frac{11.29}{0.75} = 15.05$ 'K

$C_k = 0.1$

$$\omega = \frac{15.05}{0.1(16)^2} = 0.59 \text{ K/}\square' = 590 \text{ \#/}\square'$$

$$DL = \left(\frac{11}{12} \times 150\right) 1.4 = 245 \text{ \#/}\square'$$

$$LL = \left(\frac{W - DL}{1.7}\right) = \frac{590 - 245}{1.7} = 202.9 \text{ \#/}\square'$$

SAY 200 #/□'

FREDERIKSEN ENGINEERING
CONSULTING ENGINEERS ARCHITECTS
OAKLAND LONG BEACH

C5, C7

MAX MOMENT @ COL. SUPPORT.

#5 @ 9" $A_s = 0.41$

$d = 14 - 1.5 = 12.5''$

$M_U = 3.0\, A_s d - 2.35\, A_s^2$

$= 3.0 \times 0.41 \times 12.5 - 2.35(0.41)^2$

$= 14.98^{'K}$ $\qquad \frac{14.98}{0.75} = 19.97^{'K}$

$C_k = 0.15$

$w = \frac{M}{C_k L^2} = \frac{19.97}{0.11 \times (18.75)^2} = 0.52\ ^{K}/_{\square'}$

$LL = \frac{520 - 245}{1.7} = 161.75$ PSF

SAY 160 $^{\#}/_{\square'}$

WHE $d = 9.5$

$A_s = 0.59$ #6 @ 9"

$M_u = 3.0 \times 0.59 \times 9.5 - 2.35(0.59)^2$

$= 16.1^{'K} > 14.98$

$\therefore$ D = 14" CONTROL

FREDERIKSEN ENGINEERING
CONSULTING ENGINEERS ARCHITECTS
OAKLAND LONG BEACH

CHECK SHEAR

DL = 175 x 1.4 = 245
LL = 160 x 1.7 = 272

517 PSF

CHECK TWO-WAY SLAB

COL SIZE 14" x 14" d = 9.5"

$b_o = (14+9.5)4 = 94"$

$V_u = 0.517(13.33 \times 17.625 - \overline{1.167}^2)$
$= 120.76^K$

$\phi V_c = 0.85(4\sqrt{f_c'}\, b_o d)$
$= 0.85(4\sqrt{3000} \times 94 \times 9.5)/1000$
$= 166.3^K > V_u = 120.76^K$ O.K.

CHECK BEAM SHEAR

$V_u = 0.517 \times 8' = 4.14^K$

$\phi V_c = 0.85 \times 2\sqrt{f_c'}\, b d$
$= 0.85 \times 2\sqrt{3000} \times 12 \times 9.5/1000$
$= 10.61^K > V_u = 4.14^K$ O.K.

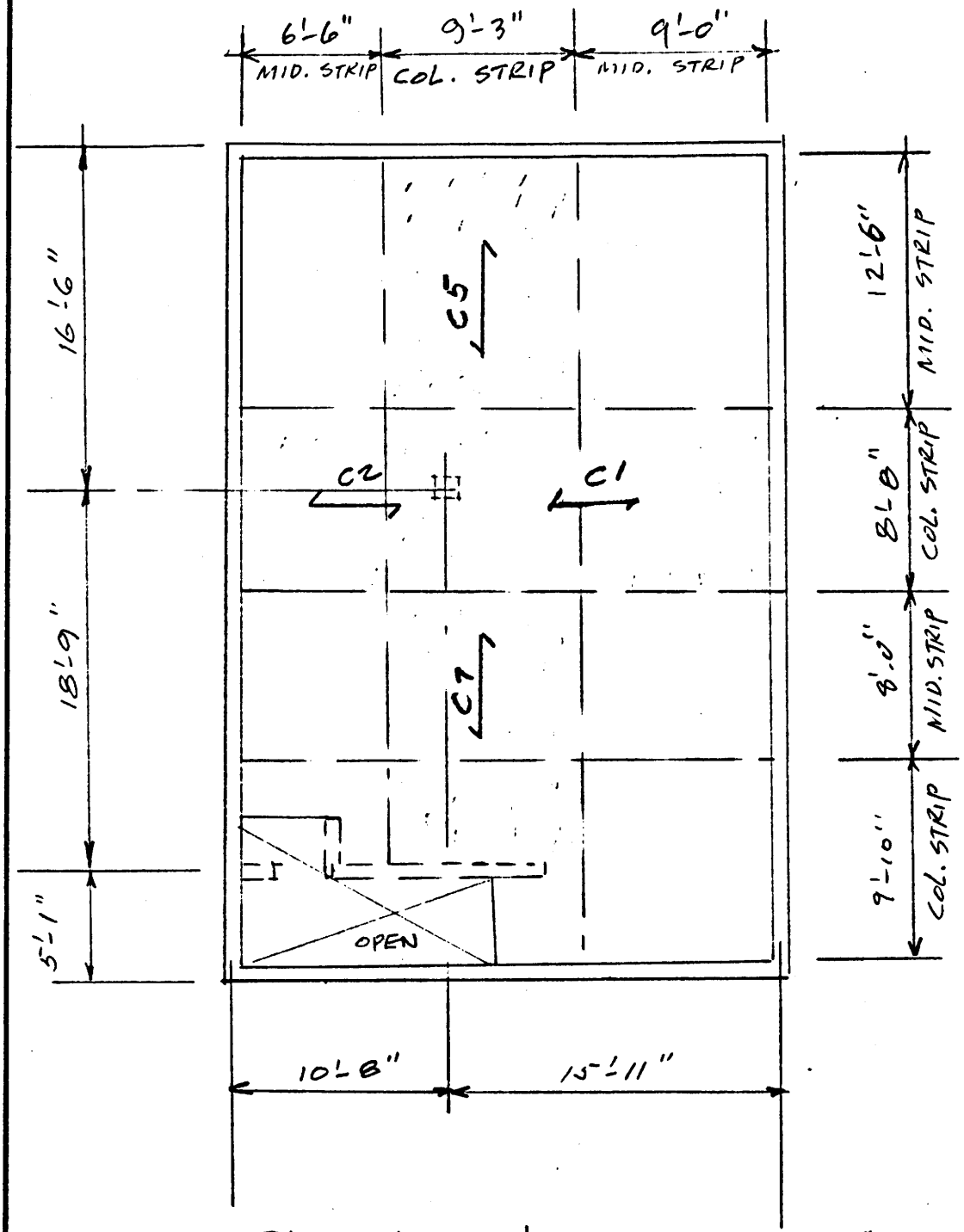

PLAN - SLAB ABOVE BASEMENT

THIS DRAWING & DESIGN DATA ARE THE SOLE PROPERTY OF FREDERIKSEN ENGINEERING CO., INC. AND IS LOANED SOLELY FOR THE PURPOSE OF THIS CONTRACT. IT IS NOT TO BE COPIED OR DISSEMINATED TO OTHERS.

REV.	DATE	REVISIONS	BY	CHK.	DEPT. APPR.	PROJ. ENGR	CLIENT APPR
△							
△							
△							

FREDERIKSEN ENGINEERING
CONSULTING ENGINEERS ARCHITECTS
OAKLAND LONG BEACH

LLNL
BLDG 313

DATE	DRAWN
SCALE	CHK.
DRAWING NO.	REV.

MISSILE IMPACT

ASSUMPTIONS:

1. MISSILE 2" x 4" x 12'0 TIMBER, WT 20 lb, TRAVELS @ 70 M.PH.

PENETRATION @ REINFORCING CONC.

REF.: MODIFIED PETRY FORMULA.

$$x = 12 K_p A_p \log_{10}\left[1 + \frac{V_s^2}{215{,}000}\right]$$

$$x_1 = \left[1 + e^{-4\left(\frac{t}{2} - 2\right)}\right] x, \qquad (t > 2x)$$

WHERE x = DEPTH OF MISSILE PENETRATION INTO CONC. ELEMENT OF INFINITE THICKNESS. (INCHES)

K_p = PENETRATION COEFFICIENT FOR REINFORCED CONC. (FIG. 2-1)

$A_p = \frac{W}{A} = \frac{\text{MISSILE WT}}{\text{PROJECTED FRONTAL AREA OF MISSILE}}$ (PSF)

V_s = STRICKING VELOCITY OF MISSILE (ft/sec.)

x_1 = DEPTH OF MISSILE PENETRATION INTO CONC. ELEMENT OF FINITE THICKNESS (INCHES)

e = BASE OF NAPIERIAN LOGRAITHMS

t = THICKNESS OF CONC. ELEMENT. (INCHES)

$$K_p = 0.0035$$

$$A_p = \frac{20 \text{ lb}}{0.167 \times 0.33} = 363.64 \text{ lb/ft}^2$$

$$V_s = \frac{70 \text{ mph} \times 5280}{60 \times 60} = 102.67 \text{ ft/sec}$$

$$\therefore \; x = 12 \times 0.0035 \times 363.64 \log_{10}\left[1 + \frac{102.67^2}{215000}\right]$$

$$x = 0.32''$$

$$x_1 = \left[1 + e^{-4\left(\frac{8}{2} - 2\right)}\right] 0.32$$

$$x_1 = 0.32'' \quad < 8'' \quad \text{o.k.}$$

MISSILE (CONT.)

PERFORATION @ CONC WALL

REF. BALLISTIC RESEARCH LABORATORY, BRL FORMULA

$$T = \frac{427}{\sqrt{f'_c}} \frac{W}{D^{1.8}} \left(\frac{V_s}{1000}\right)^{1.33}$$

$$t_p = 1.25T \leq T + 10 \text{ (INCHES)}$$

WHERE T = THICKNESS OF CONC. ELEMENT TO BE JUST PERFORATED (INCHES)

W = WT. OF MISSILES (lb)

D = DIAMETER OF MISSILES (INCHES)

V_s = STRIKING VELOCITY OF MISSILE (ft/sec.)

f'_c = COMP. STRENGTH OF CONC. (3000 psi)

t_p = CONC. ELEMENT REQ'D TO PREVENT PERFORATION.

$$D = \text{EQUIV. DIA.} = \sqrt{\frac{4A}{\pi}} = \sqrt{\frac{4 \times 8}{\pi}} = 3.19 \text{ INCH}$$

$$\therefore T = \frac{427}{\sqrt{3000}} \times \frac{20}{3.19^{1.8}} \left(\frac{102.67}{1000}\right)^{1.33}$$

$$T = 0.935''$$

$$t_p = 1.25 \times 0.935 = 1.17'' < 8'' \text{ O.K.}$$

FREDERIKSEN ENGINEERING
CONSULTING ENGINEERS ARCHITECTS
OAKLAND LONG BEACH

MISSILE (CONT.)

SPALLING @ CONC. WALL

$T_s = 2T$

$t_s = 1.25 T_s \leq T_s + 10$ (INCH)

WHERE T_s = CONC. ELEMENT THICKNESS THAT WILL JUST START SPALLING (INCH)

t_s = CONC. ELEMENT THICKNESS REQ'D TO PREVENT SPALLING.

$T_s = 0.935 \times 2 = 1.87''$

$t_s = 1.25 \times 1.87 = 2.34'' < 8''$ O.K.

FREDERIKSEN
ENGINEERING
CONSULTING
ENGINEERS
ARCHITECTS
OAKLAND · LONG BEACH

APPENDIX B

Sketches, Specifications and Construction Drawings

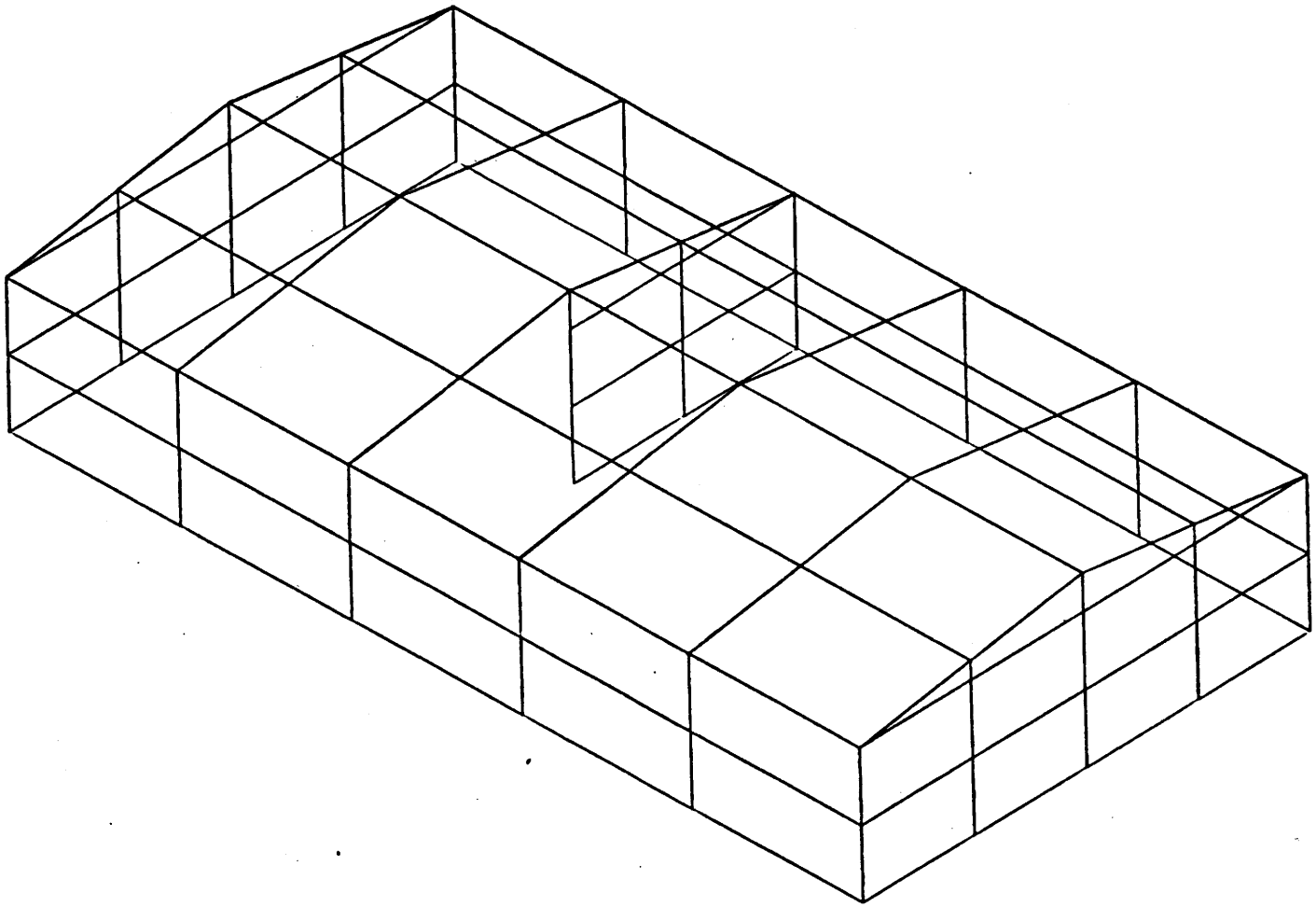

FIGURE 1

ONE STORY BUILDING

MODEL SCALE = .7290E-02

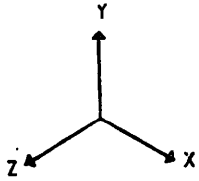

EASE2

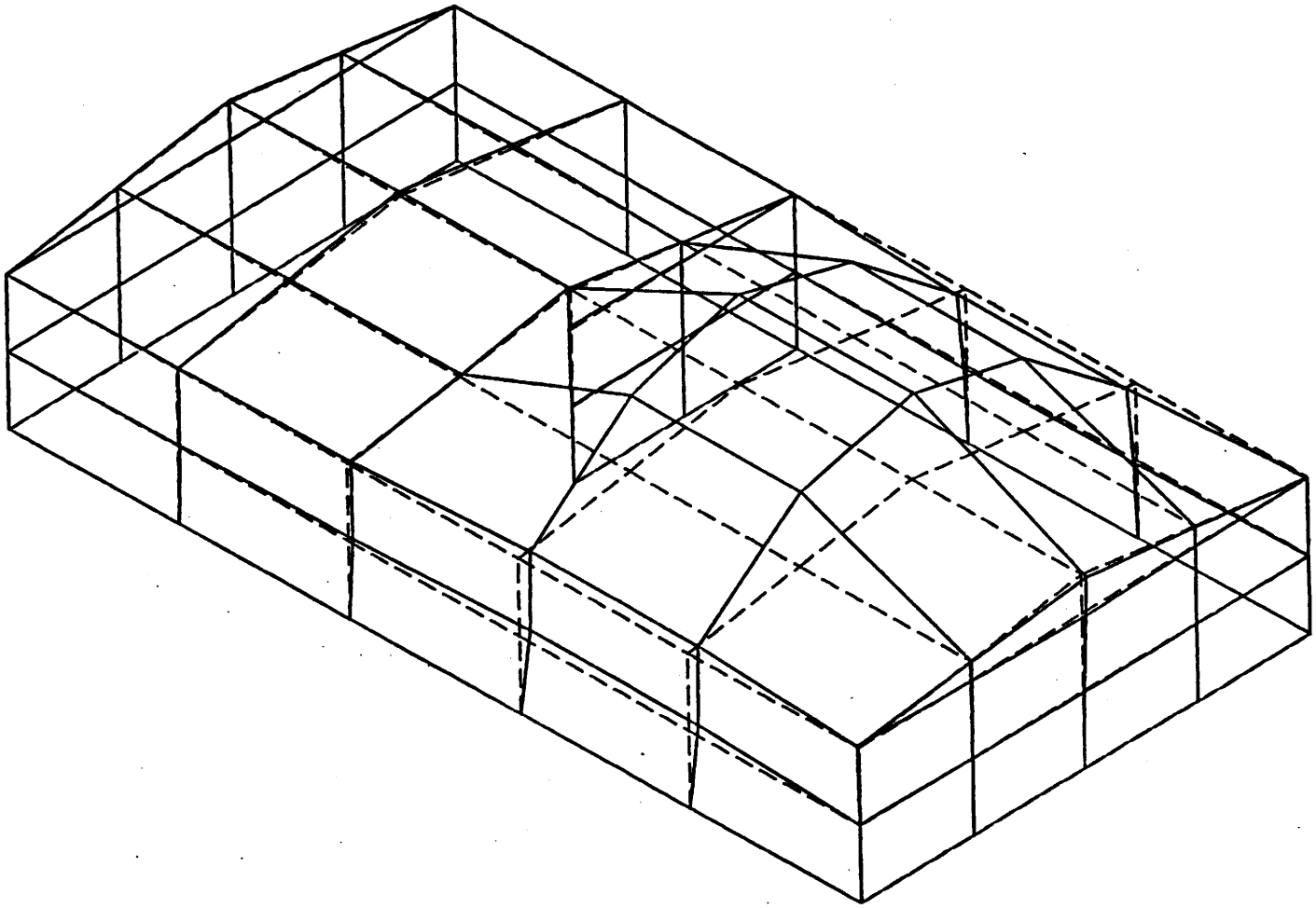

FIGURE 2

MODE SHAPE FOR SINGLE STORY BUILDING

MODEL SCALE = .7290E-02 MODE SHAPE 1 (12.0 HZ)

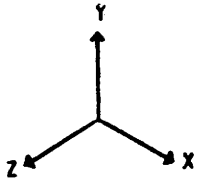

EASE2

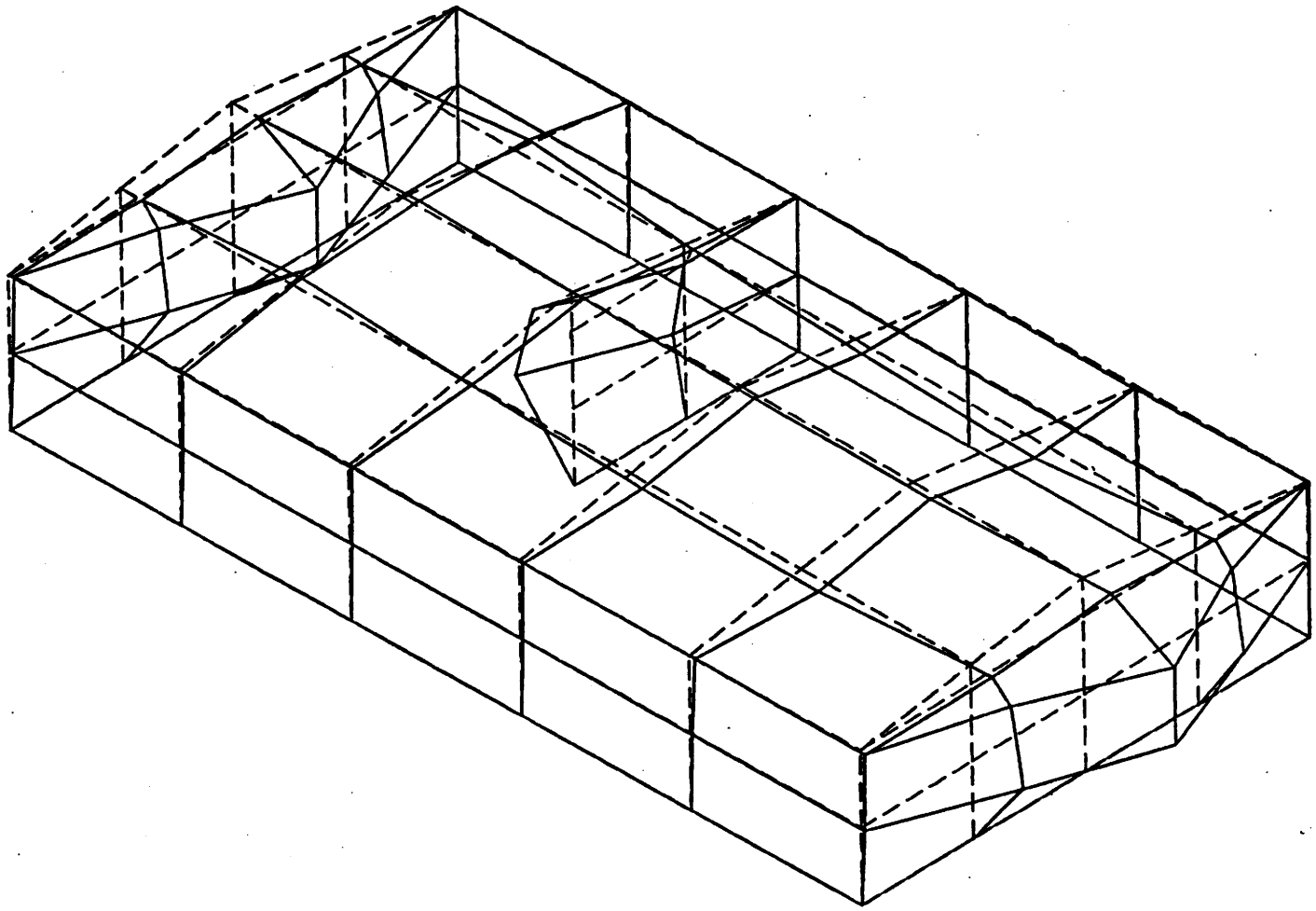

FIGURE 3

MODE SHAPE FOR SINGLE STORY BUILDING

MODEL SCALE = .7290E-02 MODE SHAPE 13 (24.7 HZ)

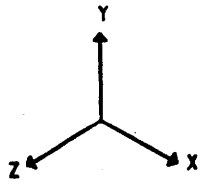

EASE2

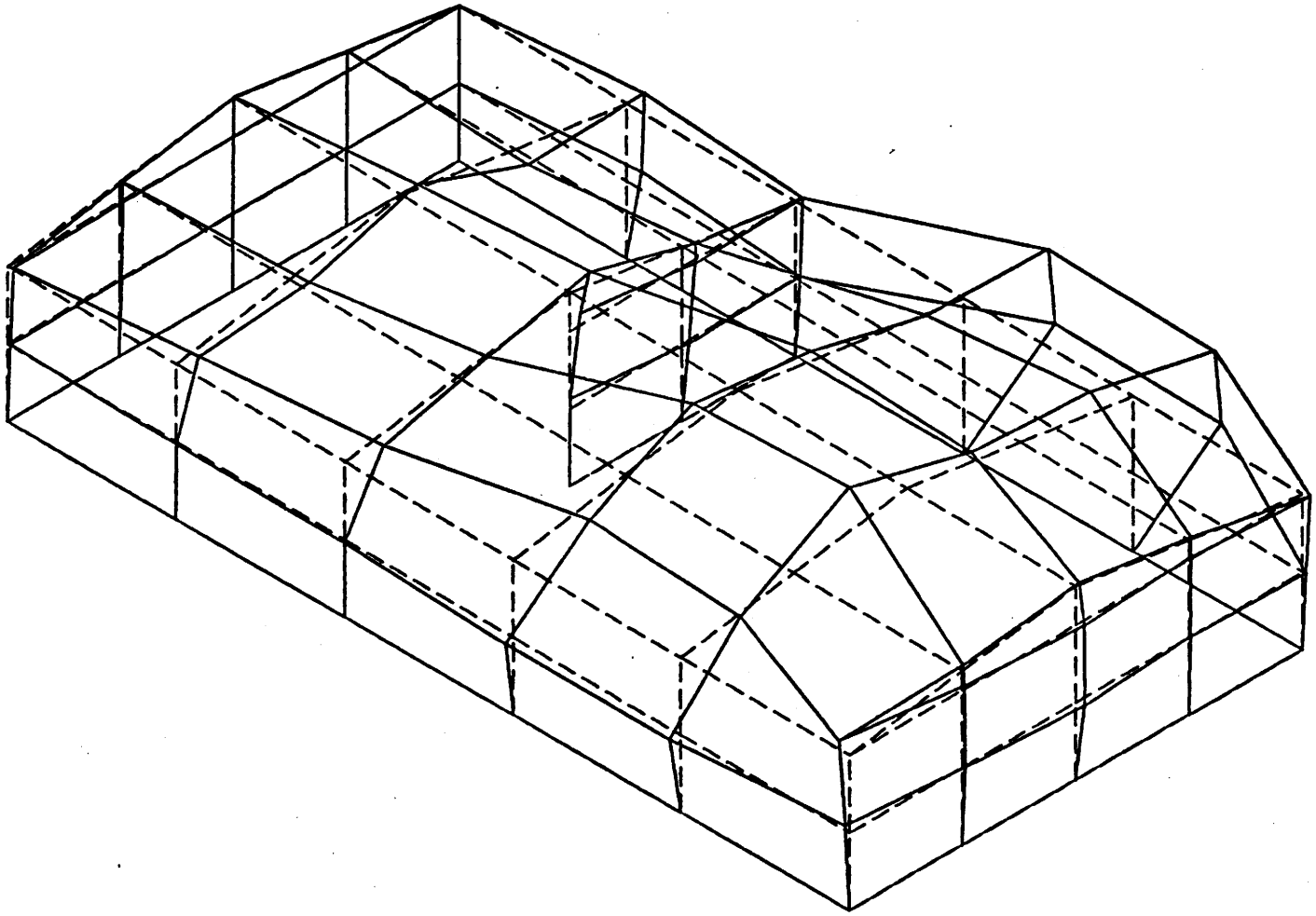

FIGURE 4

MODE SHAPE FOR SINGLE STORY BUILDING

MODEL SCALE = .7290E-02 MODE SHAPE 15 (29.8 HZ)

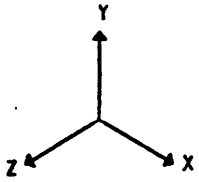

EASE2

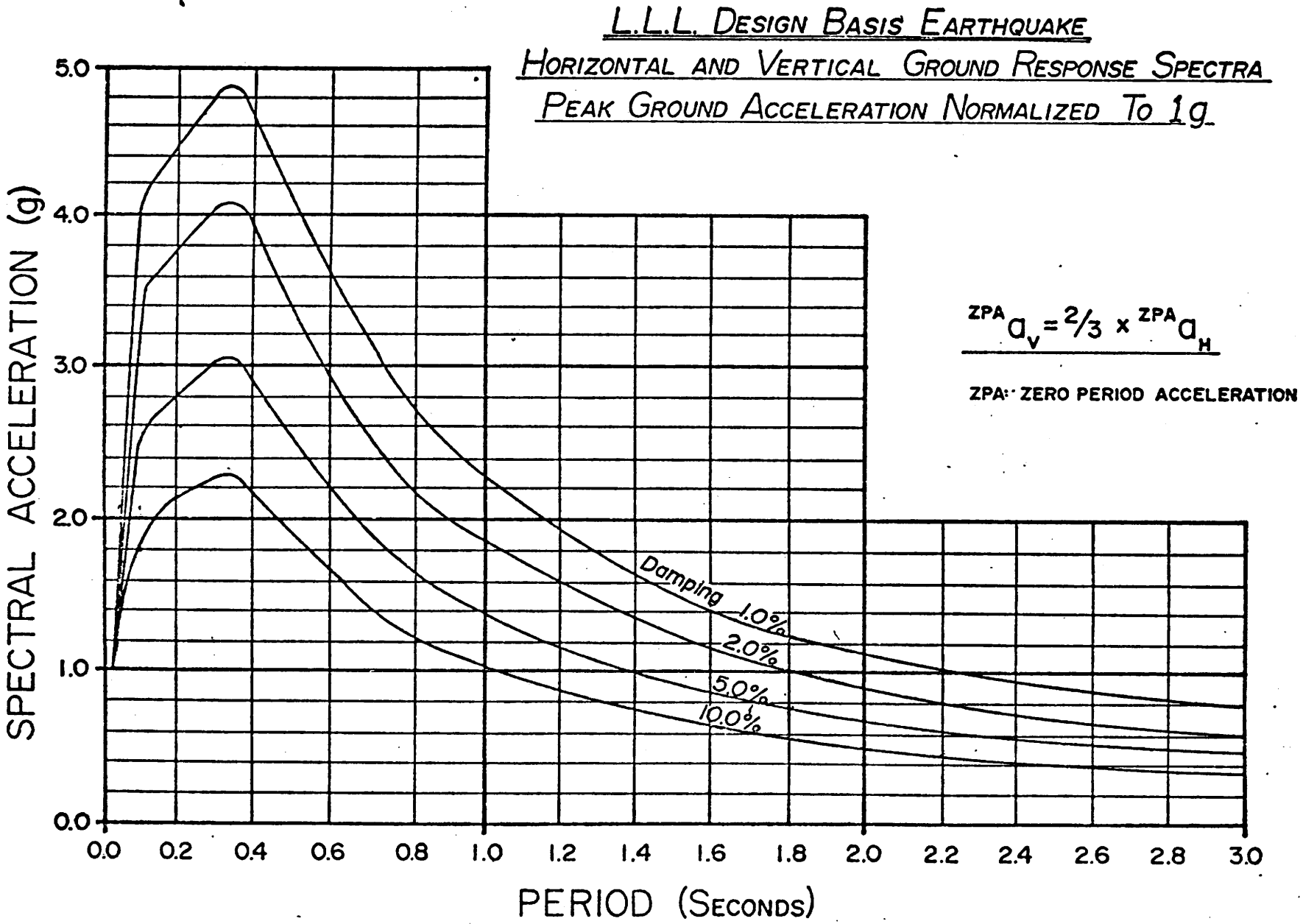
L.L.L. DESIGN BASIS EARTHQUAKE
HORIZONTAL AND VERTICAL GROUND RESPONSE SPECTRA
PEAK GROUND ACCELERATION NORMALIZED TO 1g
$^{ZPA}a_V = 2/3 \times {}^{ZPA}a_H$
ZPA: ZERO PERIOD ACCELERATION
SPECTRAL ACCELERATION (g)
5.0
4.0
3.0
2.0
1.0
0.0
Damping 1.0%
2.0%
5.0%
10.0%
0.0
0.2
0.4
0.6
0.8
1.0
1.2
1.4
1.6
1.8
2.0
2.2
2.4
2.6
2.8
3.0
PERIOD (SECONDS)

FIGURE 5

THIS DRAWING & DESIGN DATA ARE THE SOLE PROPERTY OF FREDERIKSEN ENGINEERING CO., INC. AND IS LOANED SOLELY FOR THE PURPOSE OF THIS CONTRACT. IT IS NOT TO BE COPIED OR DISSEMINATED TO OTHERS.

GENERAL NOTES

GENERAL

1. The following notes shall apply to all drawings. All work shall be in accordance with requirements of "UNIFORM BUILDING CODE", 1979 Edition, "AISC MANUAL" Seventh Edition and "ACI STANDARD 318-77".

CONCRETE AND REINFORCEMENT

1. Concrete shall have a minimum compressive strength of 3,000 psi at 28th day.
2. Reinforcing steel shall be new, free of scale and rust, per ASTM A-615 Grade 40.
3. Unless otherwise noted, reinforcing steel shall have a minimum concrete cover as per ACI 318-77 Chapter 7.
4. Splices in reinforcement unless otherwise noted 40 dia. of bar.
5. All anchor bolts, shall be "Red Head" Phillip's Anchors or equal. Bolt sizes are shown on the drawings.
6. All exposed edges shall have 3/4" chamfer.

STRUCTURAL STEEL

1. Structural steel, plate and bars shall be ASTM A-36.
2. Connection bolts shall be 3/4" Dia. ASTM A 325 with threads excluded from the shear plane unless otherwise noted.
3. For bolt connection, a minimum of two bolts is required.
4. All welds shall be made with #70 XX electrodes.
5. Details shown are typical. Where specific details are not shown, provide typical connections as specified.
6. All gusset plate shall be 3/8" thick unless noted otherwise.
7. All steel shall be painted one shop coat with red lead FS TT-T-86A Type II, or zinc chormate primer. Do not paint the edges and surface areas where they will be field welded.

REV.	DATE	REVISIONS	BY	CHK.	DEPT. APPR.	PROJ. ENGR.	CLIENT APPR
△							
△							
△	7-17-81	ISSUED FOR CONSTRUCTION.	BP	[illegible]			

FREDERIKSEN ENGINEERING
CONSULTING ENGINEERS ARCHITECTS
OAKLAND LONG BEACH

L.L.N.L. DISASTER CENTER
BUILDING 313
SEISMIC REINFORCEMENT
SPECIFICATIONS

DATE 7-17-81	DRAWN [illegible]
SCALE N/A	CHK.
DRAWING NO.	REV.
1354-A0	0

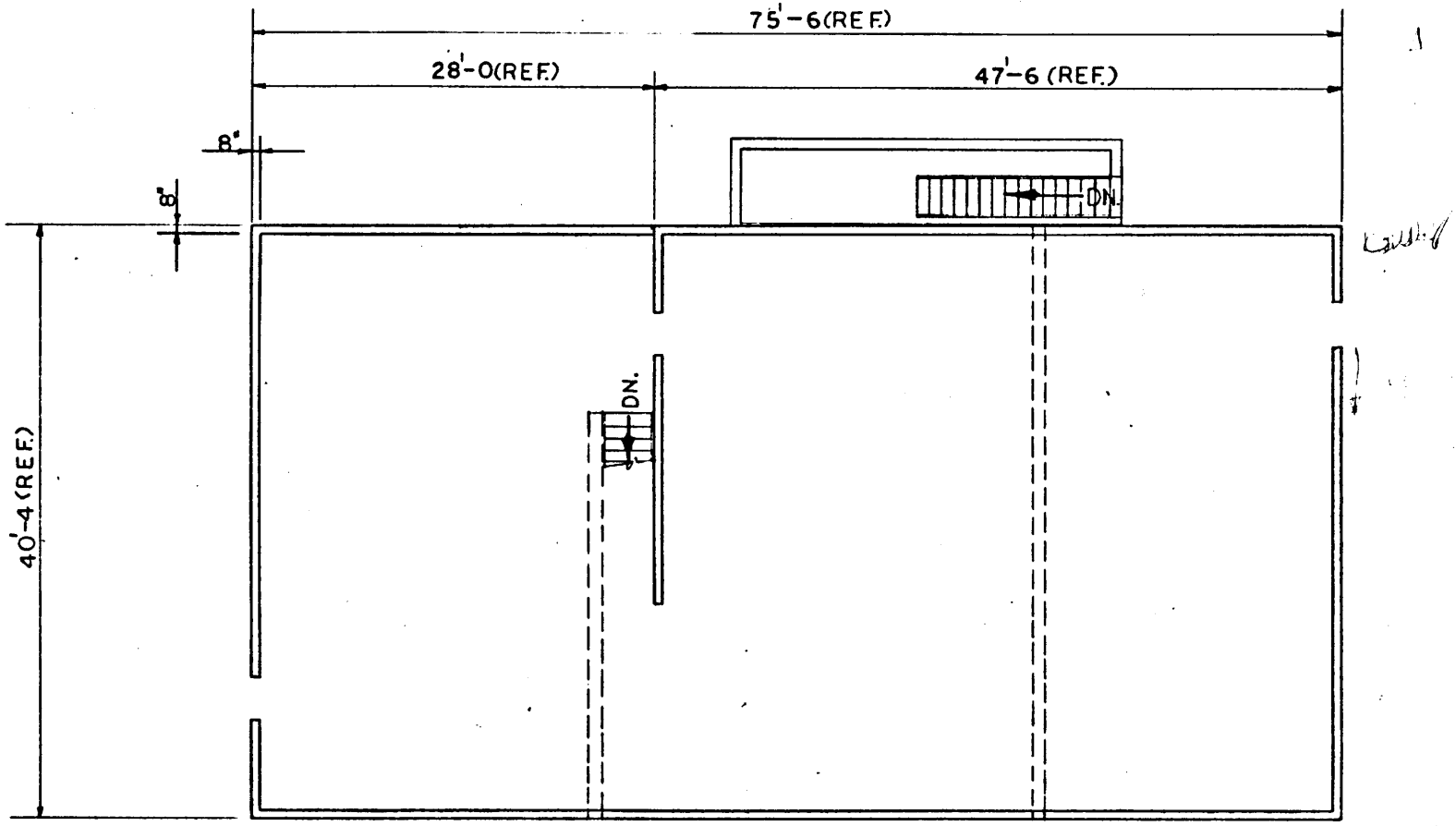

FIRST FLOOR PLAN

1/8"=1'-0

DWG. REDUCED

REV	DATE	REVISIONS	BY	CHK.	DEPT APPR	PROJ ENGR	CLIENT APPR
3							
2							
1							
0	7-17-81	ISSUED FOR CONSTRUCTION.	BP	SP			

FREDERIKSEN ENGINEERING
CONSULTING ENGINEERS ARCHITECTS
OAKLAND LONG BEACH

DATE 7-17-81 | DRAWN R. CHAN | CHK E. PUN | SCALE 1/8"=1'-0

L.L.N.L. DISASTER CENTER
BUILDING 313
SEISMIC REINFORCEMENT
FIRST FLOOR PLAN

DRAWING NO 1354-A1 | REV 0

THIS DRAWING & DESIGN DATA ARE THE SOLE PROPERTY OF FREDERIKSEN ENGINEERING CO. INC AND IS LOANED SOLELY FOR THE PURPOSE OF THIS CONTRACT. IT IS NOT TO BE COPIED OR DISSEMINATED TO OTHERS

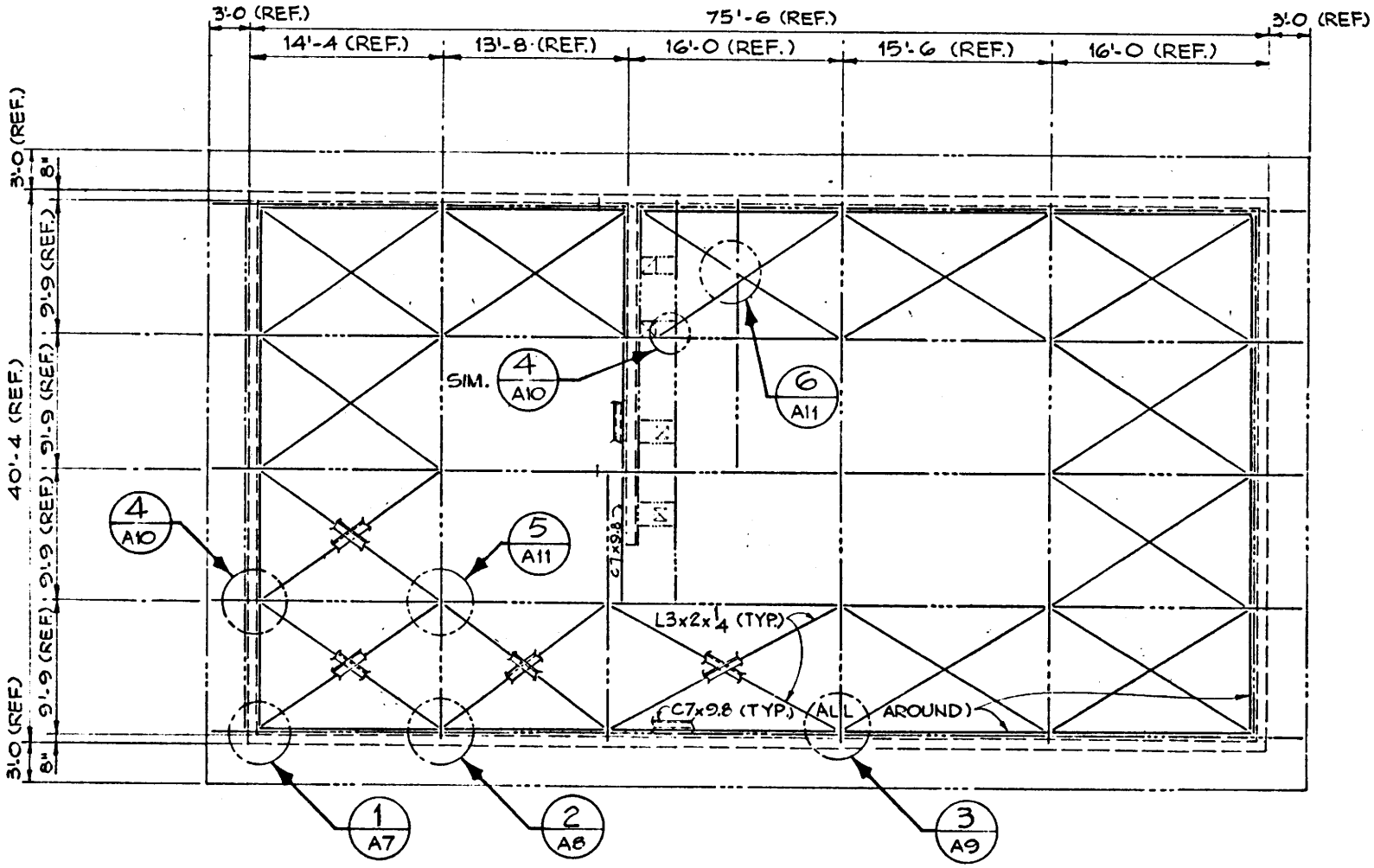

ROOF FRAMING PLAN

DWG. REDUCED

REV	DATE	REVISIONS	BY	CHK	DEPT APPR	PROJ ENGR	CLIENT APPR
△							
△							
△							
△	7-17-81	ISSUED FOR CONSTRUCTION.	BP				

FREDERIKSEN ENGINEERING
CONSULTING ENGINEERS ARCHITECTS
OAKLAND LONG BEACH

DATE 7-16-81 | DRAWN ROMEROY | CHK PUN | SCALE 1/8" = 1'-0

L.L.N.L. DISASTER CENTER
BUILDING 313
SEISMIC REINFORCEMENT
ROOF FRAMING PLAN

DRAWING NO 1354-A2 | REV 0

THIS DRAWING & DESIGN DATA ARE THE SOLE PROPERTY OF FREDERIKSEN ENGINEERING CO. INC. AND IS LOANED SOLELY FOR THE PURPOSE OF THIS CONTRACT. IT IS NOT TO BE COPIED OR DISSEMINATED TO OTHERS.

THIS DRAWING & DESIGN DATA ARE THE SOLE PROPERTY OF FREDERIKSEN ENGINEERING CO., INC. AND IS LOANED SOLELY FOR THE PURPOSE OF THIS CONTRACT. IT IS NOT TO BE COPIED OR DISSEMINATED TO OTHERS.

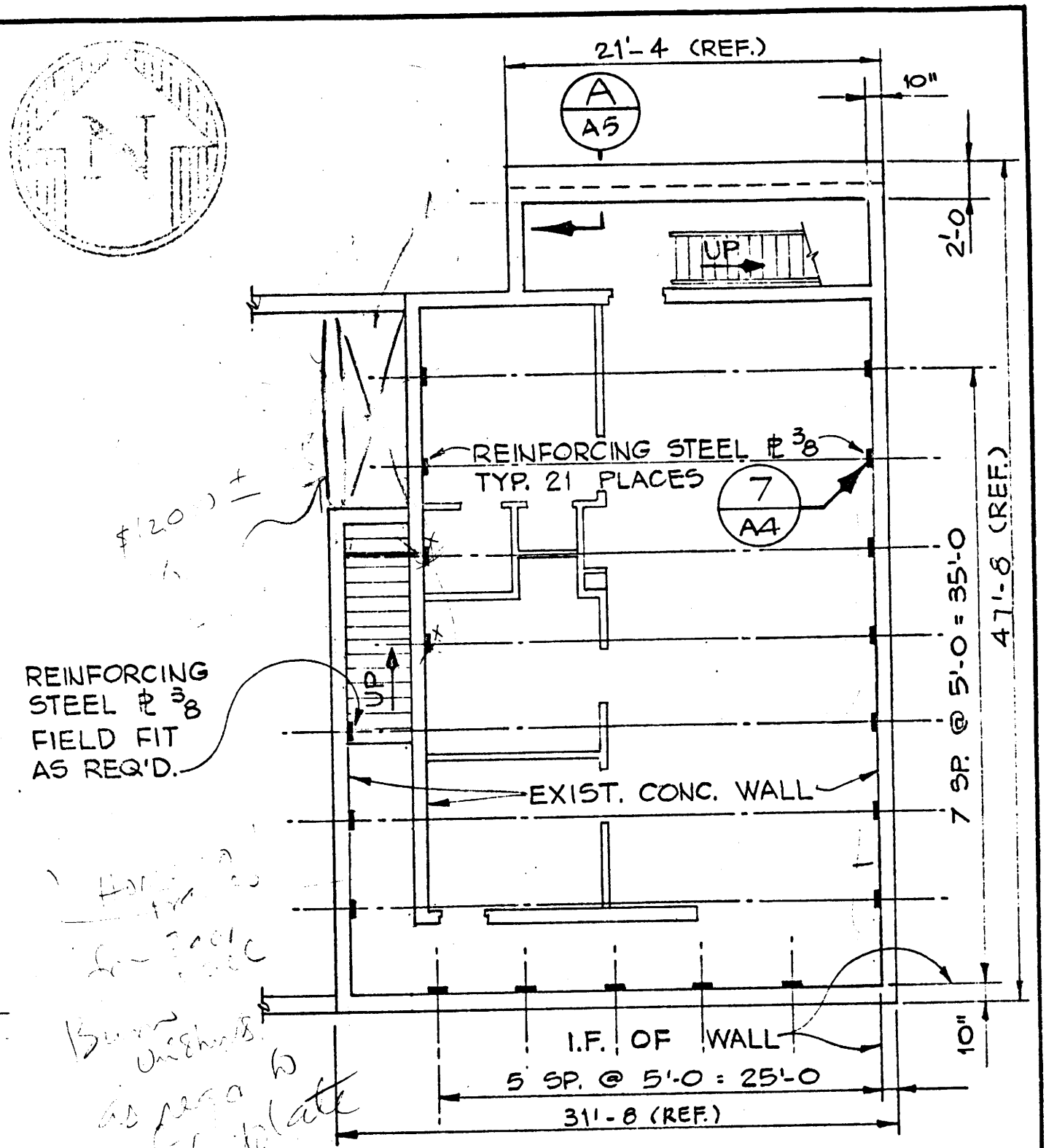

BASEMENT PLAN

REV.	DATE	REVISIONS	BY	CHK.	DEPT. APPR.	PROJ. ENGR.	CLIENT APPR.
0	7-17-81	ISSUED FOR CONSTRUCTION.	BP	EI			

FREDERIKSEN ENGINEERING
CONSULTING ENGINEERS ARCHITECTS
OAKLAND LONG BEACH

L.L.N.L. DISASTER CENTER
BUILDING 313
SEISMIC REINFORCEMENT
BASEMENT PLAN

DATE 7-14-81	DRAWN F. SMERCO
SCALE 1/8" = 1'-0	CHK. RUN
DRAWING NO.	REV.
1354-A3	0

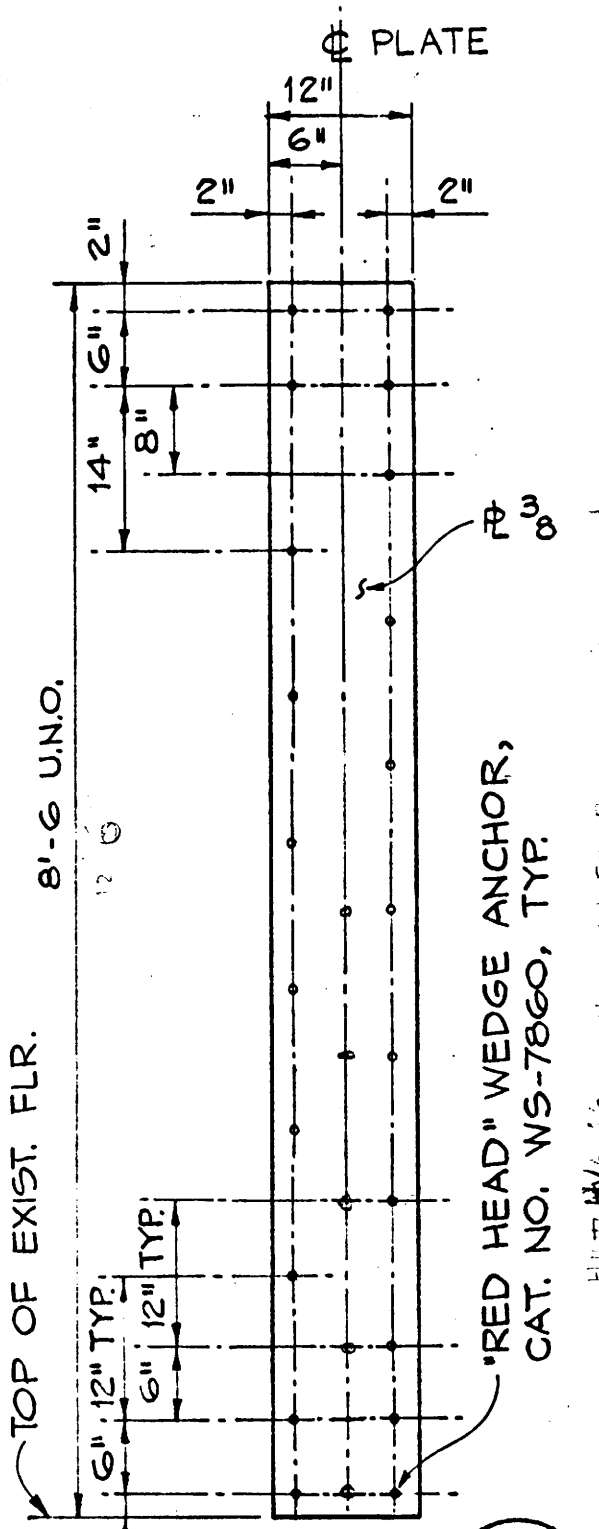

DETAIL 7 / A3

THIS DRAWING & DESIGN DATA ARE THE SOLE PROPERTY OF FREDERIKSEN ENGINEERING CO., INC. AND IS LOANED SOLELY FOR THE PURPOSE OF THIS CONTRACT. IT IS NOT TO BE COPIED OR DISSEMINATED TO OTHERS.

REV.	DATE	REVISIONS	BY	CHK.	DEPT. APPR.	PROJ. ENGR.	CLIENT APPR
△							
△							
0	7-17-81	ISSUED FOR CONSTRUCTION.	BP				

FREDERIKSEN ENGINEERING
CONSULTING ENGINEERS ARCHITECTS
OAKLAND LONG BEACH

L.L.N.L. DISASTER CENTER
BUILDING 313
SEISMIC REINFORCEMENT
REINF. STEEL PLATE DET.

DATE 7-15-81	DRAWN
SCALE 3/4" = 1'-0	CHK.
DRAWING NO.	REV.
1354-A4	0

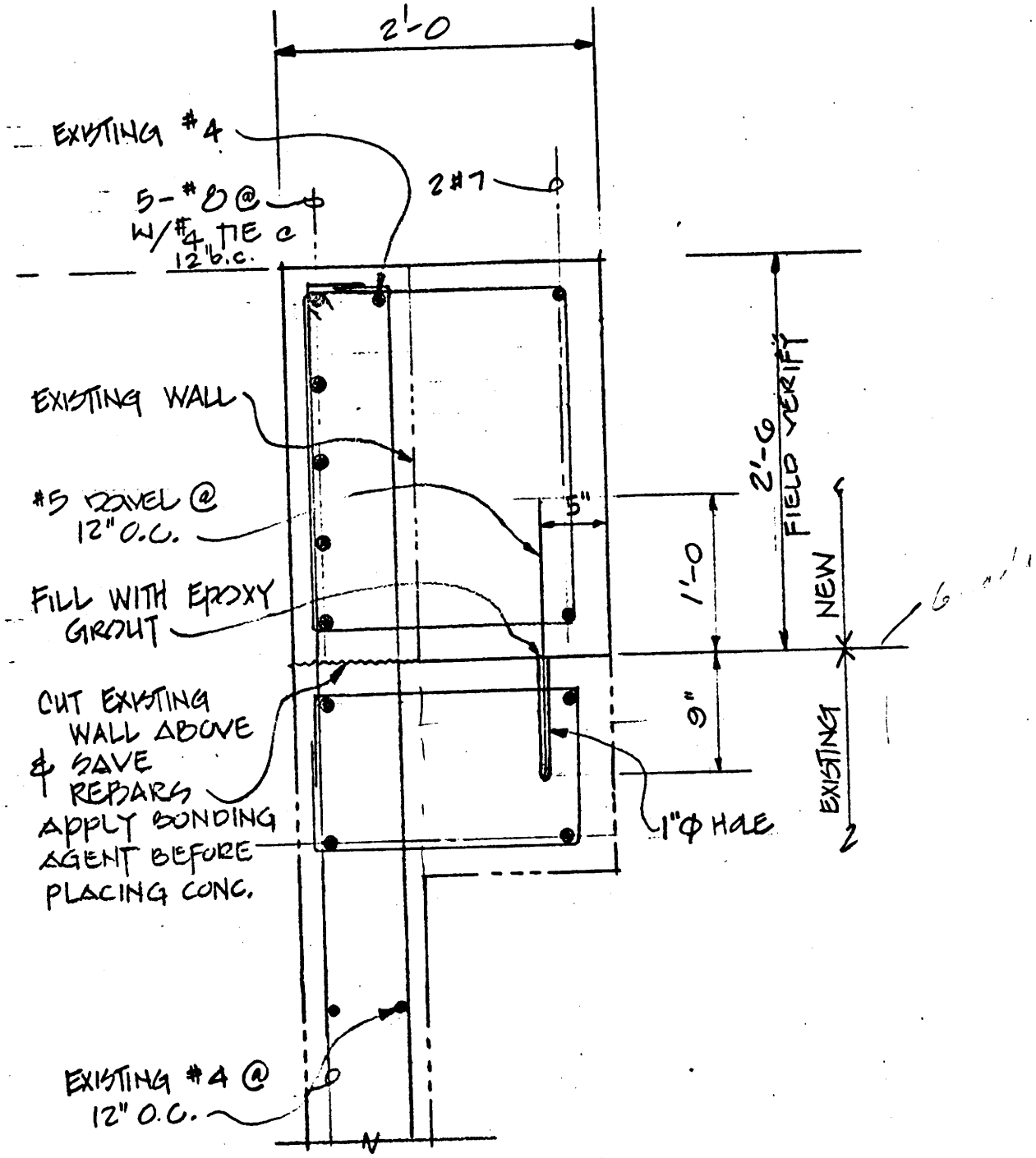

SECTION A/A3

1" = 1'-0

REV.	DATE	REVISIONS	BY	CHK.	DEPT. APPR.	PROJ. ENGR.
△						
△						
△	7-17-81	ISSUED FOR CONSTRUCTION.	BP	EP		

FREDERIKSEN ENGINEERING
CONSULTING ENGINEERS ARCHITECTS
OAKLAND LONG BEACH

L.L.N.L. DISASTER CENTER
BUILDING 313
SEISMIC REINFORCEMENT
GRADE BEAM DETAIL

DATE 7/17/81 DRAWN R
SCALE 1" = 1'-0 CHK. PUH
DRAWING NO.
1354-A5

THIS DRAWING & DESIGN DATA ARE THE SOLE PROPERTY OF FREDERIKSEN ENGINEERING CO., INC. AND IS LOANED SOLELY FOR THE PURPOSE OF THIS CONTRACT. IT IS NOT TO BE COPIED OR DISSEMINATED TO OTHERS.

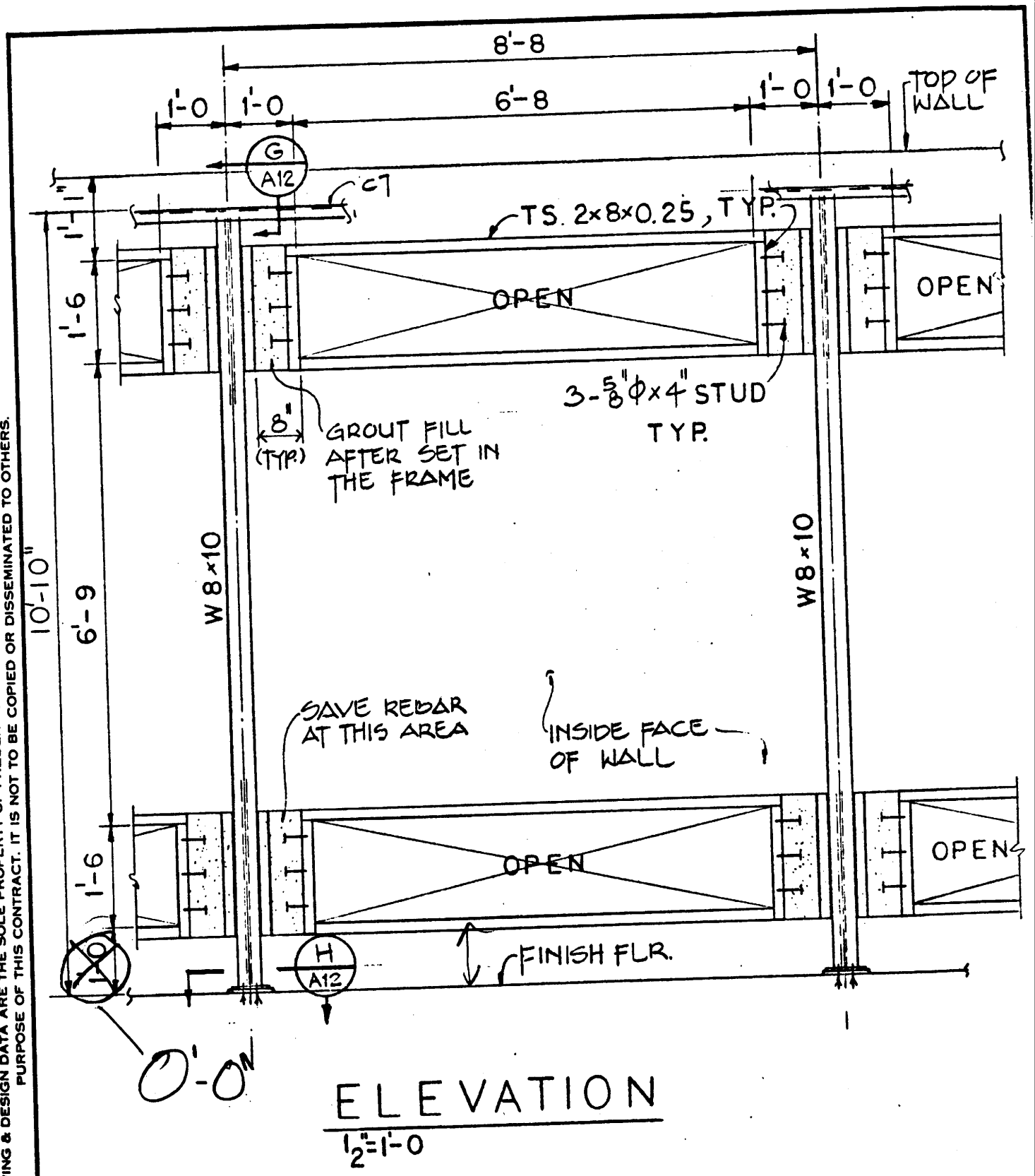

ELEVATION

1/2"=1'-0

THIS DRAWING & DESIGN DATA ARE THE SOLE PROPERTY OF FREDERIKSEN ENGINEERING CO., INC. AND IS LOANED SOLELY FOR THE PURPOSE OF THIS CONTRACT. IT IS NOT TO BE COPIED OR DISSEMINATED TO OTHERS.

REV.	DATE	REVISIONS	BY	CHK.	DEPT. APPR.	PROJ. ENGR.	CLIENT APPR.
0	7-17-81	ISSUED FOR CONSTRUCTION.	BP	EP			

FREDERIKSEN ENGINEERING
CONSULTING ENGINEERS ARCHITECTS
OAKLAND LONG BEACH

L.L.N.L. DISASTER CENTER
BUILDING 313
SEISMIC REINFORCEMENT
FUTURE WALL OPENINGS

DATE 7-16-81 DRAWN
SCALE 1/2"=1'-0 CHK.
DRAWING NO. 1354-A6

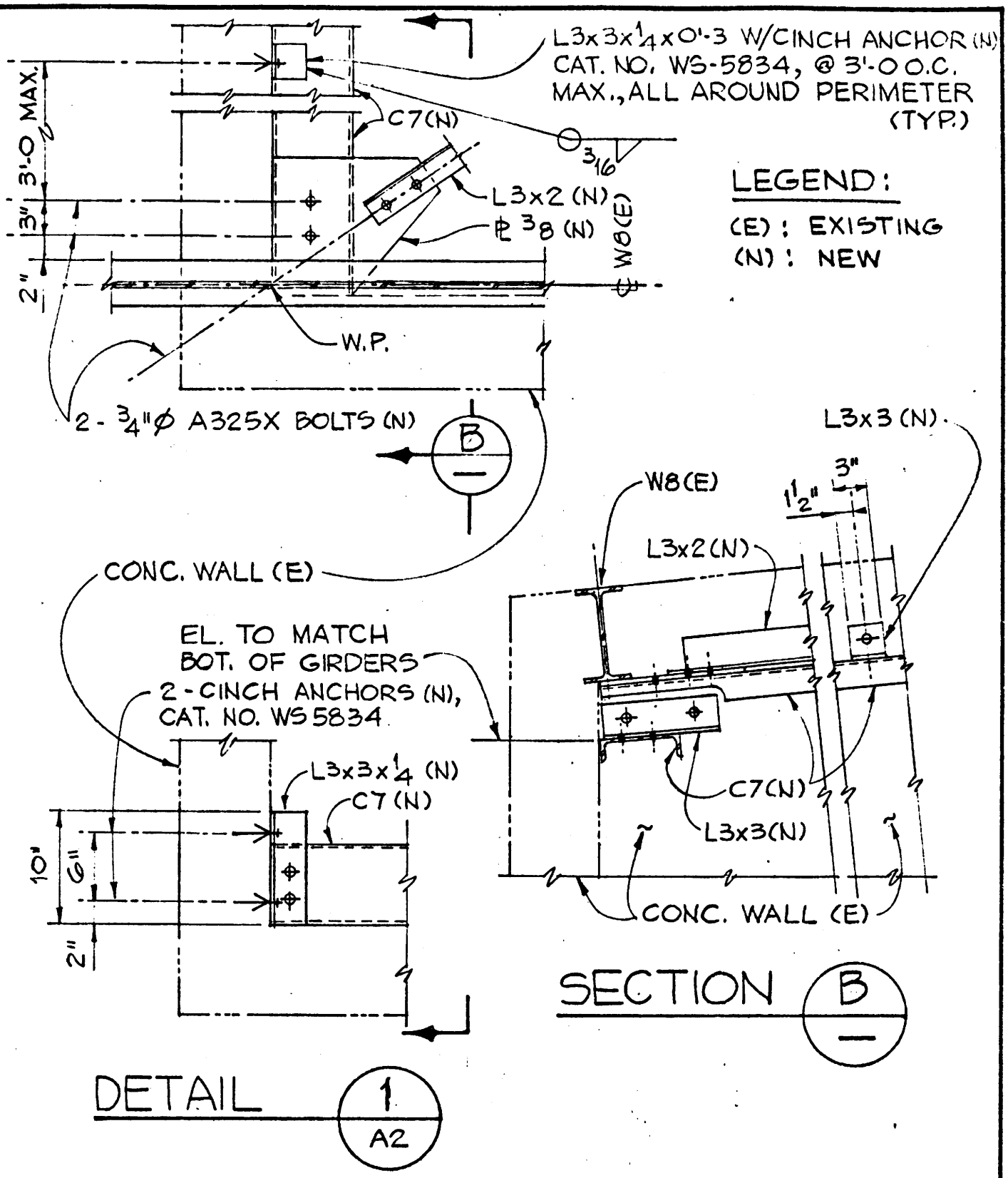

REV.	DATE	REVISIONS	BY	CHK.	DEPT. APPR.	PROJ. ENGR.	CLIENT APPR
△							
△							
△	7-17-81	ISSUED FOR CONSTRUCTION.	DP	ED			

FREDERIKSEN ENGINEERING
CONSULTING ENGINEERS ARCHITECTS
OAKLAND LONG BEACH

L.L.N.L. DISASTER CENTER
BUILDING 313
SEISMIC REINFORCEMENT
ROOF FRAMING DET. & SECT.

DATE 7-17-81	DRAWN [illegible]
SCALE 1" = 1'-0	CHK. PCN
DRAWING NO.	REV.
1354-A7	0

THIS DRAWING & DESIGN DATA ARE THE SOLE PROPERTY OF FREDERIKSEN ENGINEERING CO., INC. AND IS LOANED SOLELY FOR THE PURPOSE OF THIS CONTRACT. IT IS NOT TO BE COPIED OR DISSEMINATED TO OTHERS.

THIS DRAWING & DESIGN DATA ARE THE SOLE PROPERTY OF FREDERIKSEN ENGINEERING CO., INC. AND IS LOANED SOLELY FOR THE PURPOSE OF THIS CONTRACT. IT IS NOT TO BE COPIED OR DISSEMINATED TO OTHERS.

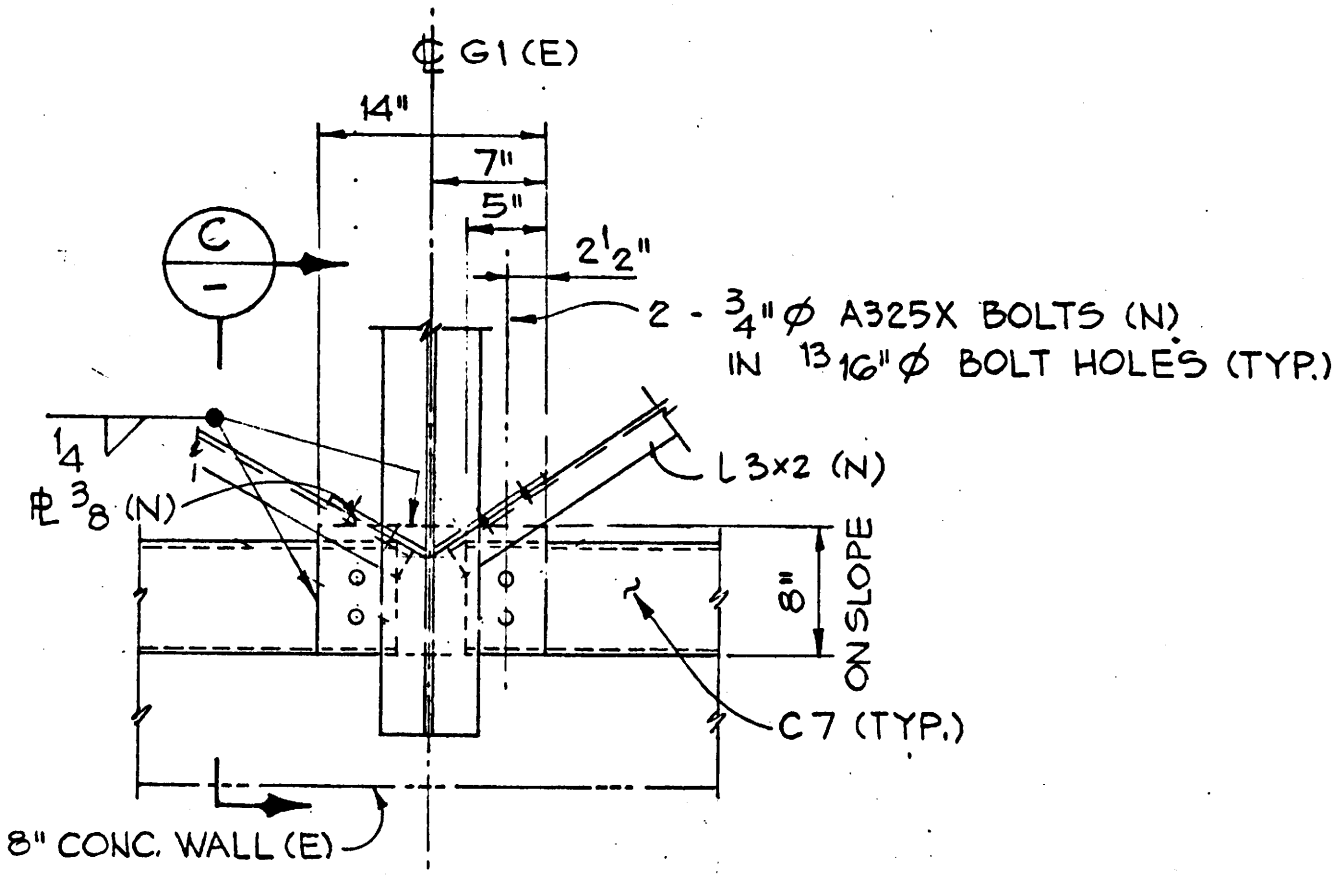

DETAIL 2 / A-2

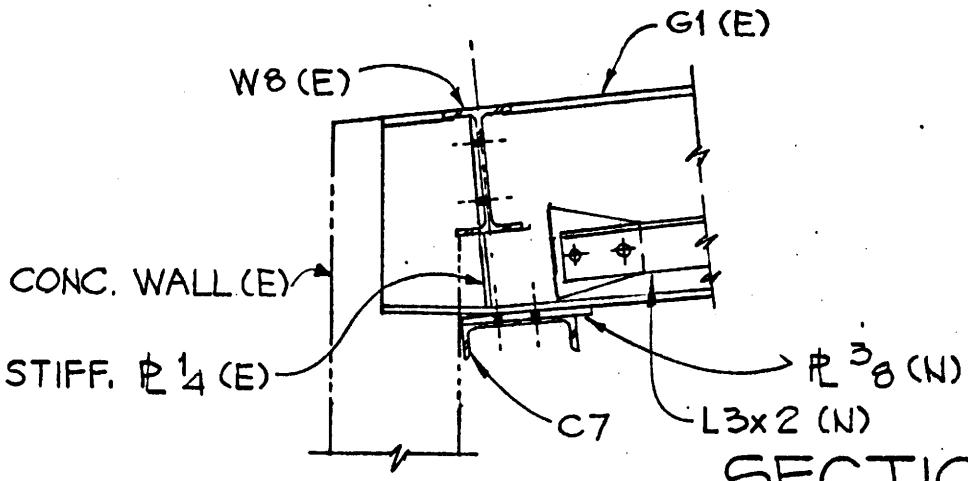

SECTION C / -

REV.	DATE	REVISIONS	BY	CHK.	DEPT. APPR.	PROJ. ENGR.	CLIENT APPR.
△							
△							
0	7/17/81	ISSUED FOR CONSTRUCTION.	bp	[illegible]			

FREDERIKSEN ENGINEERING
CONSULTING ENGINEERS ARCHITECTS
OAKLAND LONG BEACH

L.L.N.L. DISASTER CENTER
BUILDING 313
SEISMIC REINFORCEMENT
ROOF FRAMING SECTS.

DATE 7-10-81	DRAWN [illegible]
SCALE 1" = 1'-0	CHK. [illegible]
DRAWING NO.	REV.
1354-A8	0

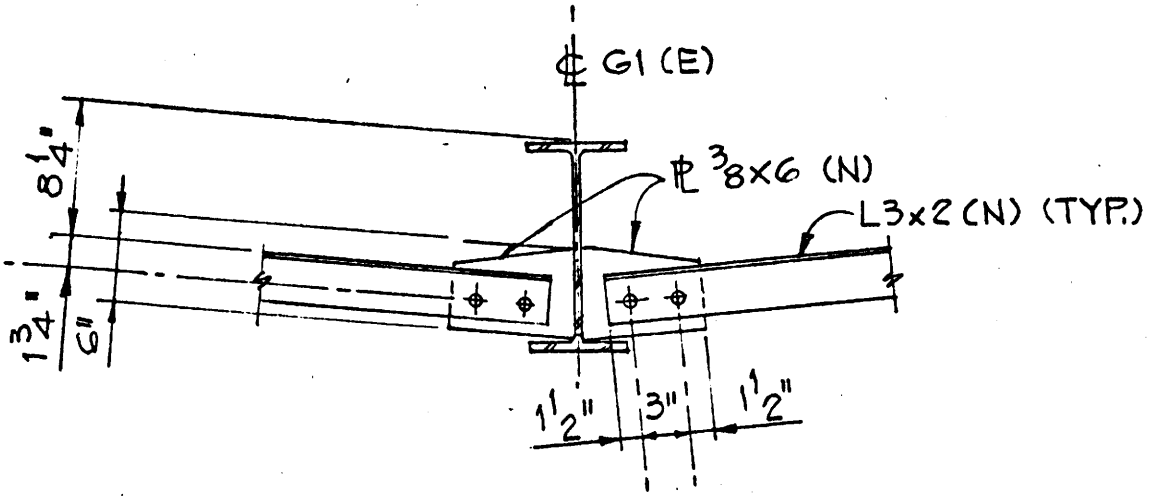

SECTION D/—

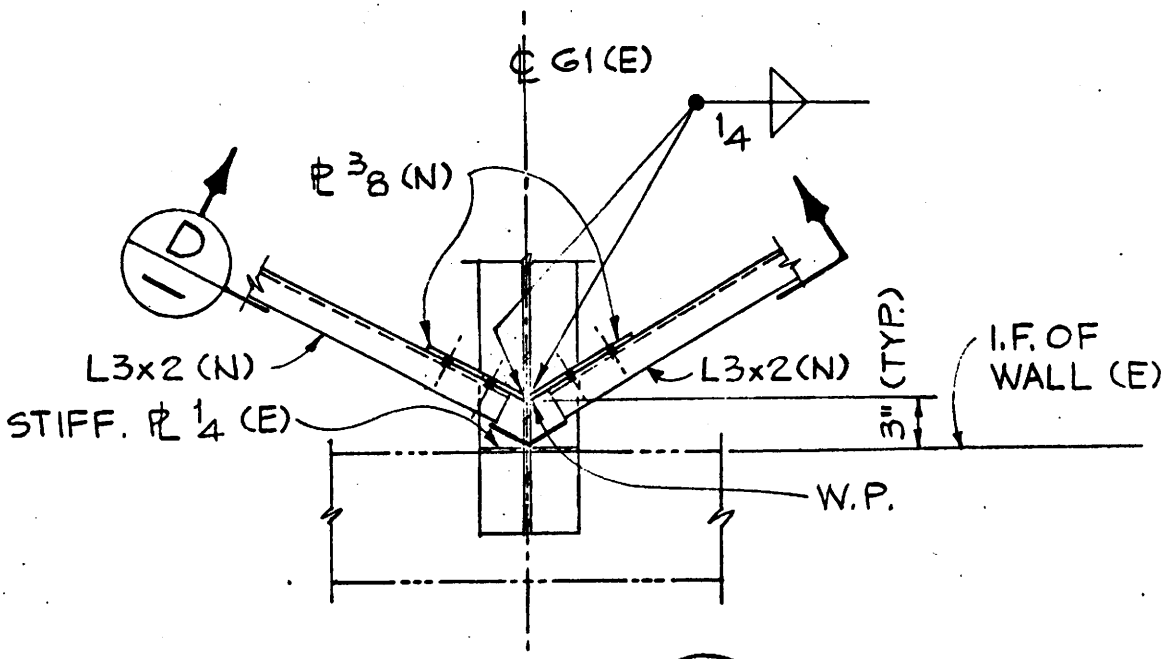

DETAIL 3/A2

REV.	DATE	REVISIONS	BY	CHK.	DEPT. APPR.	PROJ. ENGR	CLIENT APPR
△							
△							
△	7-17-81	ISSUED FOR CONSTRUCTION.	BP	SI			

FREDERIKSEN ENGINEERING
CONSULTING ENGINEERS ARCHITECTS
OAKLAND LONG BEACH

L.L.N.L. DISASTER CENTER
BUILDING 313
SEISMIC REINFORCEMENT
ROOF FRAMING SECTS.

DATE 7-18-81	DRAWN [illegible]
SCALE 1"=1'-0	CHK. PCN
DRAWING NO.	REV.
1354-A9	0

THIS DRAWING & DESIGN DATA ARE THE SOLE PROPERTY OF FREDERIKSEN ENGINEERING CO., INC. AND IS LOANED SOLELY FOR THE PURPOSE OF THIS CONTRACT. IT IS NOT TO BE COPIED OR DISSEMINATED TO OTHERS.

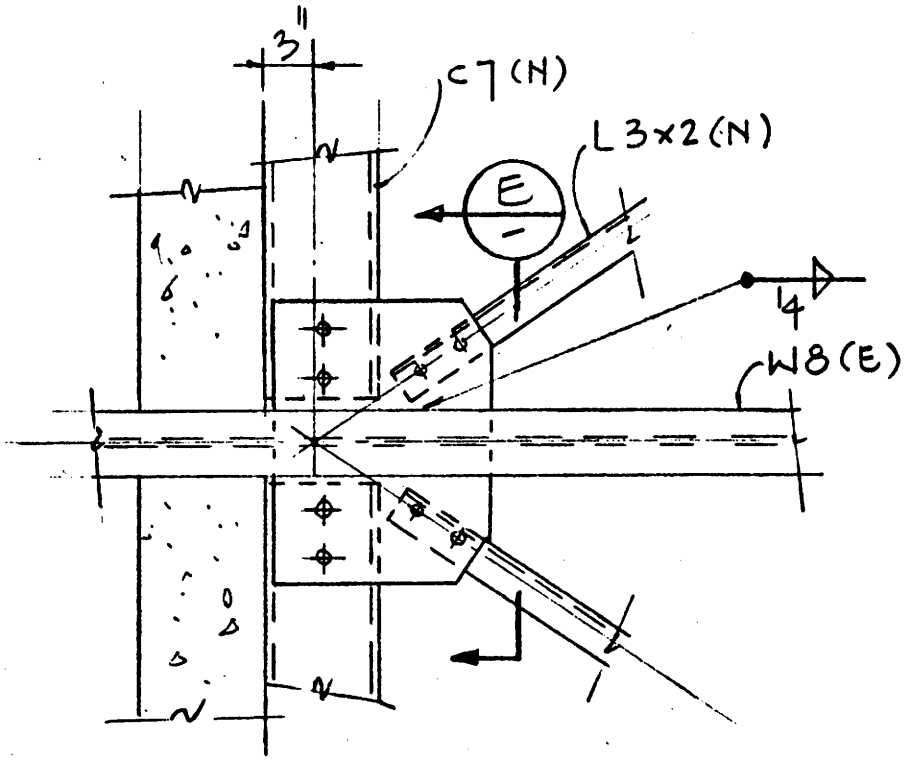

DETAIL 4 / A-2

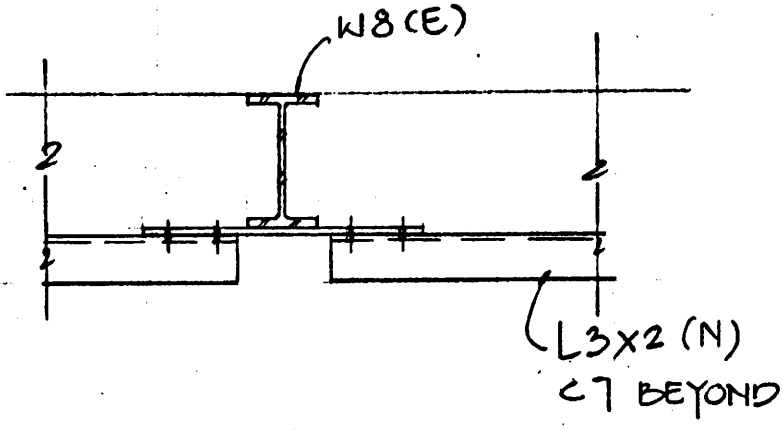

SECTION E

REV.	DATE	REVISIONS	BY	CHK.	DEPT. APPR.	PROJ. ENGR	CLIENT APPR.
△							
△							
△ 6	7/17-81	ISSUED FOR CONSTRUCTION.	B.P	[illegible]			

FREDERIKSEN ENGINEERING
CONSULTING ENGINEERS ARCHITECTS
OAKLAND LONG BEACH

L.L.N.L. DISASTER CENTER
BUILDING 313
SEISMIC REINFORCEMENT
ROOF FRAMING SECTS.

DATE 7-18-81		DRAWN	[illegible]
SCALE 1" = 1'-0		CHK.	PLIN
DRAWING NO.		REV.	
1354-A10		0	

THIS DRAWING & DESIGN DATA ARE THE SOLE PROPERTY OF FREDERIKSEN ENGINEERING CO., INC. AND IS LOANED SOLELY FOR THE PURPOSE OF THIS CONTRACT. IT IS NOT TO BE COPIED OR DISSEMINATED TO OTHERS.

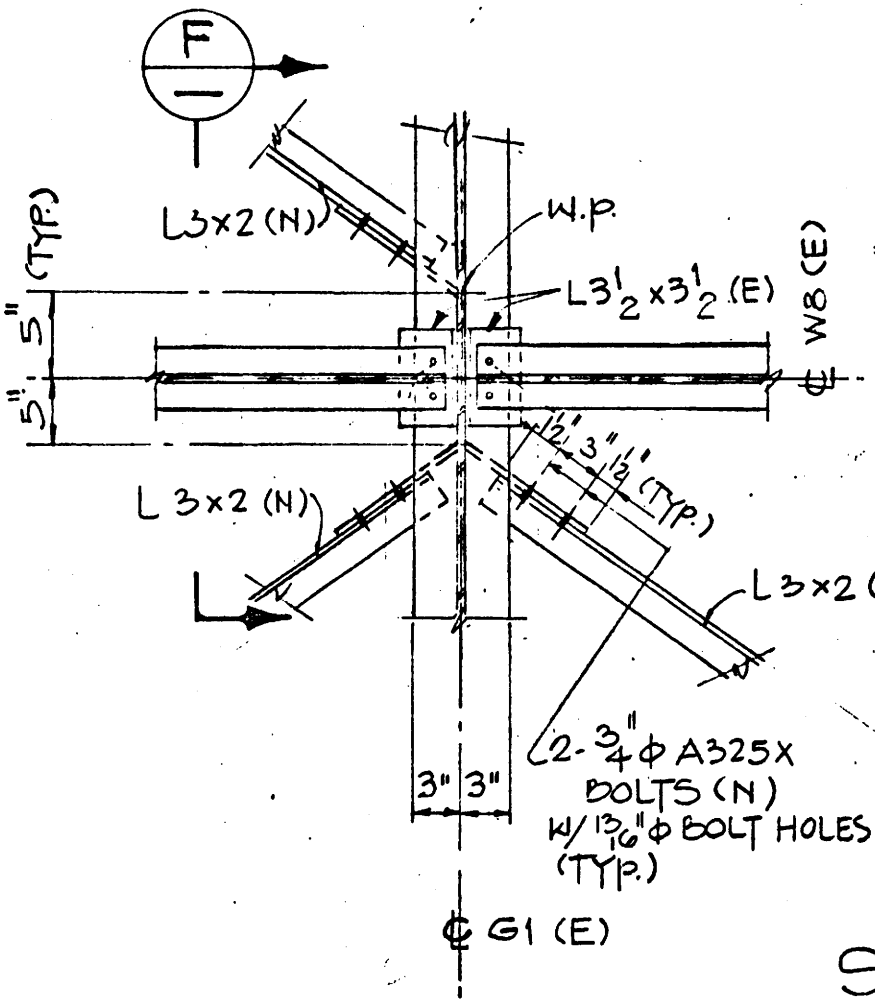

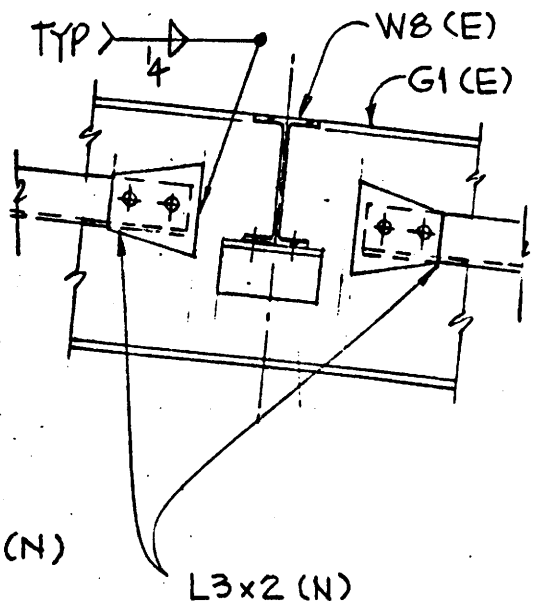

SECTION F

DETAIL 5 / A2

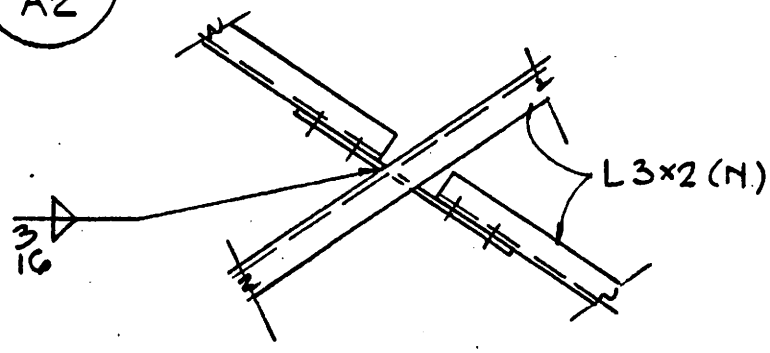

DETAIL 6 / A2

REV.	DATE	REVISIONS	BY	CHK.	DEPT. APPR.	PROJ. ENGR.	CLIENT APPR
△							
△							
△	7-17-81	ISSUED FOR CONSTRUCTION.	BP	EP			

FREDERIKSEN ENGINEERING
CONSULTING ENGINEERS ARCHITECTS
OAKLAND LONG BEACH

L.L.N.L. DISASTER CENTER
BUILDING 313
SEISMIC REINFORCEMENT
ROOF FRAMING DET. & SECT.

DATE 7-16-81	DRAWN.
SCALE 1" = 1'-0	CHK. DIN
DRAWING NO.	REV.
1354-A11	0

THIS DRAWING & DESIGN DATA ARE THE SOLE PROPERTY OF FREDERIKSEN ENGINEERING CO., INC. AND IS LOANED SOLELY FOR THE PURPOSE OF THIS CONTRACT. IT IS NOT TO BE COPIED OR DISSEMINATED TO OTHERS.

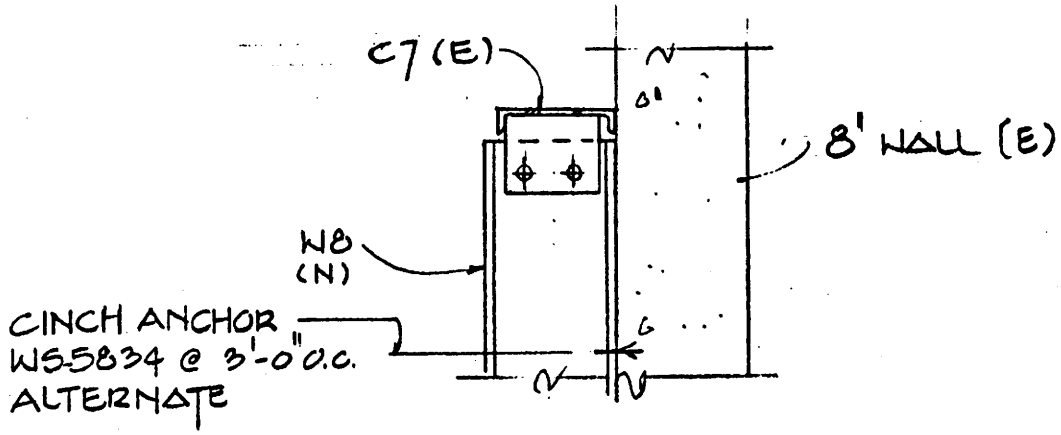

SECTION G

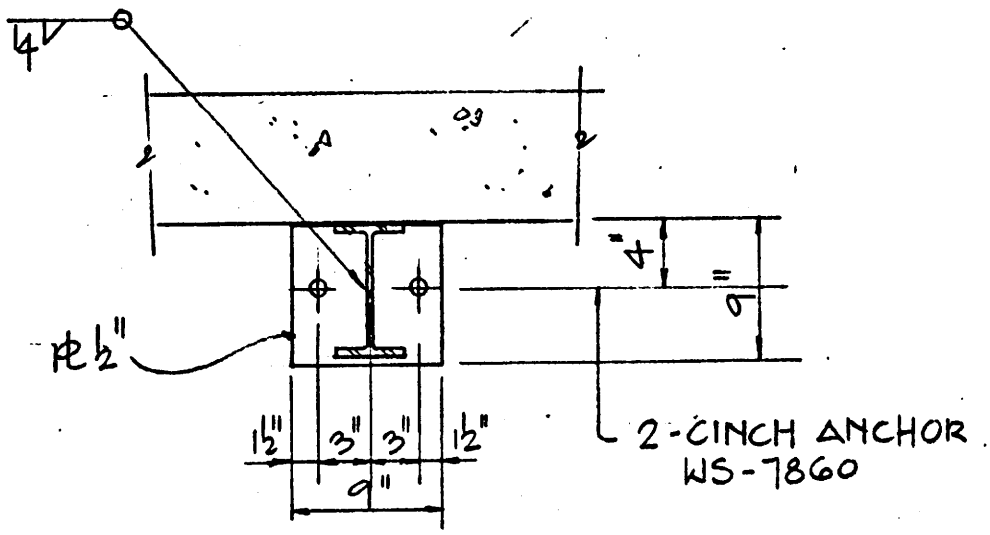

SECTION H

REV.	DATE	REVISIONS	BY	CHK.	DEPT. APPR.	PROJ. ENGR.	CLIENT APPR.
△							
△							
△	7-17-81	ISSUED FOR CONSTRUCTION.	BP				

FREDERIKSEN ENGINEERING
CONSULTING ENGINEERS ARCHITECTS
OAKLAND LONG BEACH

L.L.N.L. DISASTER CENTER
BUILDING 313
SEISMIC REINFORCEMENT
FUTURE WALL OPNG. SECTS.

DATE 7-17-81 | DRAWN [illegible]
SCALE 1" = 1'-0 | CHK.
DRAWING NO. 1354-A12 | REV. 0

THIS DRAWING & DESIGN DATA ARE THE SOLE PROPERTY OF FREDERIKSEN ENGINEERING CO., INC. AND IS LOANED SOLELY FOR THE PURPOSE OF THIS CONTRACT. IT IS NOT TO BE COPIED OR DISSEMINATED TO OTHERS.

FREDERIKSEN ENGINEERING
CONSULTING
ENGINEERS
ARCHITECTS

OAKLAND · LONG BEACH

APPENDIX C

Wind-borne Missile Impact Test Report

Interdepartmental letterhead

Mail Station L- 322

Ext: 20780

February 12, 1981

TO: Distribution

FROM: B. R. Diaz

SUBJECT: Wind-Borne Missile Impact Tests - Summary of Test Results

---

The subject test series was conducted to establish the integrity of certain nonstructural building components of LLNL facilities to withstand wind-borne missile impacts of a specified design basis velocity. The missile for all tests was a 2 x 4 pine plank, 12 ft. long and weighing 15 lbs. Impact velocity for all tests was nominally 70 m.p.h. The full-scale targets, in chronological order, were: a 12 ft. x 14 ft. metal roll-up Hi-bay door; a metal, hollow-core, double pedestrian door; a metal, hollow-core, single pedestrian door; a chain link fence without wood slats; a chain link fence with wood slats; and four metal wall panel sections with gauge thickness of 22, 20, and 18.

The roll-up door, single and double pedestrian doors, and chain link fences all satisfactorily prevented entry or penetration of the 2 x 4 plank at 70 m.p.h. Four tests at 70 m.p.h. against wall panel sections opened up at the center lap joint in each test, allowing the 2 x 4 plank to penetrate about two feet. Two of the latter tests were conducted with the center joint of the panel fastened with sheet metal screws and two panels were tested with the center joint fastened with rivets. Neither the screws nor rivets exhibited satisfactory holding power for the level of impact loading experienced in these tests. In the case of the riveted 22 Gauge test, the panel material was weaker than the rivets which elongated the holes and punched through the panel material. In the case of the riveted 18 gauge test, the holes did not tear or elongate. The rivets failed in shear/tension. The panel tests concluded that the standard lap jointed sheet metal and rivet connections were not sufficient to prevent penetration of the missile.

Benjamin R. Diaz

B. R. Diaz
Civil Engineering Group Leader

BRD:sk

University of California
LAWRENCE LIVERMORE LABORATORY