LAWRENCE
LIVERMORE
NATIONAL
LABORATORY

LLNL-TR-662056

National Ignition Facility Laser Design and Cost Basis Appendices August 1993

J. Paisner

October 6, 2014

Disclaimer

This document was prepared as an account of work sponsored by an agency of the United States government. Neither the United States government nor Lawrence Livermore National Security, LLC, nor any of their employees makes any warranty, expressed or implied, or assumes any legal liability or responsibility for the accuracy, completeness, or usefulness of any information, apparatus, product, or process disclosed, or represents that its use would not infringe privately owned rights. Reference herein to any specific commercial product, process, or service by trade name, trademark, manufacturer, or otherwise does not necessarily constitute or imply its endorsement, recommendation, or favoring by the United States government or Lawrence Livermore National Security, LLC. The views and opinions of authors expressed herein do not necessarily state or reflect those of the United States government or Lawrence Livermore National Security, LLC, and shall not be used for advertising or product endorsement purposes.

This work performed under the auspices of the U.S. Department of Energy by Lawrence Livermore National Laboratory under Contract DE-AC52-07NA27344.

LLNL-TR-662056

NIF-93-030
L-15864-1
FINAL

National Ignition Facility
Laser Design and Cost Basis Appendices

August 1993

NIF

The National Ignition Facility

University of California
Lawrence Livermore National Laboratory

National Ignition Facility

Laser Design and Cost Basis

Appendices

Appendix A: ChainOp Executive Configuration Summary
Appendix B: ChainOp Cost Algorithims
Appendix C: Optics Tables
Appendix D: Laser Document File Log
Appendix E: Laser Design Basis Presentation to DOE 8/11/93

LAWRENCE LIVERMORE NATIONAL LABORATORY
University of California • Livermore, California • 94550

Appendix A

CHAINOP
Executive Configuration Summary

Appendix A

Four NIF laser designs are summarized here.

Design #1

This is the "point design" used to normalize the CHAINOP optimization code. The engineering staff estimated the cost of the laser components for this system and generated the cost scaling rules needed to evaluate other NIF system designs.

This system design is estimated to deliver a one micron pulse to the tripler that has an effective pulse length of 4.8 nanoseconds, energy of 3.0 MJ and peak power of 630 TW. The limited dynamic range of frequency tripler shortens the effective pulse length to 3.6 nanoseconds. The resulting UV pulse arriving at the laser entrance hole of the target has a peak power of 340 TW, and an energy of 1.2 MJ.

It has a 192 beamlets, each with a 35 cm aperture. Its amplifier slab configuration is designated by 11-5-3; with 11 slabs in the main amplifier, 5 slabs in the switch amplifier, and 3 slabs in the booster amplifier. It is assumed to have a Nova style frequency tripler with a dynamic range of ~2, a peak tripling efficiency of 70%, and an energy tripling efficiency of ~52%. The transmission of the UV beam transport optics and the kinoform phase plate used in the calculation were 90% and 85% respectively.

Design #2

This is one of the laser designs shown fig 4.5 and table 17.1 of this report. It has the largest performance risk associated with it.

This design is estimated to deliver a one micron pulse to the tripler that has an effective pulse length of 3.6 nanoseconds, an energy of 2.8 MJ, and peak power of 770 TW. The UV pulse arriving at the LEH of the target has had an effective pulse length of 3.6 nanoseconds, an energy of 1.8 MJ and a peak power of 500 TW.

It has ~192 beamlets, each with a 35 cm apertures. Its amplifier slab configuration is designated by 11-3-3; with 11 slabs in the main amplifier, 3 slabs in the switch amplifier, and 3 slabs in the booster amplifier. We've assumed that we can develop a tripler that has a very large dynamic range, a peak efficiency of 75%, and an energy tripling efficiency of 75%. A ~12% increase in the damage threshold of the UV beam transport is also needed. The transmission of the UV beam transport optics and the kinoform phase plate used in the calculation were 91% and 95% respectively.

Design #3

This is one of the laser designs shown table 17.1 and it is close to the design presented in fig 4.5 of this report. It was obtained from the target risk analysis. It has a 23% design margin associated with it, so the performance risk associated with it is modest.

This design is estimated to deliver a one micron pulse to the tripler that has an effective pulse length of 4.8 nanoseconds, an energy of 4.7 MJ, and peak power of 980 TW. The UV pulse arriving at the LEH of the target has had an effective pulse length of 3.6 nanoseconds, an energy of 1.8 MJ and a peak power of 500 TW.

It has ~288 beamlets, each with a 35 cm aperture. Its amplifier slab configuration is designated by 9-5-3; with 9 slabs in the main amplifier, 5 slabs in the switch amplifier, and 3 slabs in the booster amplifier. It is assumed to have a Nova style frequency tripler with a dynamic range of ~2, a peak tripling efficiency of 70%, and an energy tripling efficiency of ~52%. The design margin was modeled by assuming that the transmission of the UV beam transport optics and the kinoform phase plate were 86% and 85% respectively.

Design #4

This is also one of the laser designs shown in table 17.1 of this report. It has the same performance characteristics as Design #3, but uses 240 beamlets with increased aperture. If the beamlets in this design are clustered into groups of four, the resulting 60, four beamlet clusters could provide the same direct drive target irradiation as proposed by Rochester.

This design is estimated to deliver a one micron pulse to the tripler that has an effective pulse length of 4.8 nanoseconds, an energy of 4.8 MJ, and peak power of 980 TW. The UV pulse arriving at the LEH of the target has had an effective pulse length of 3.6 nanoseconds, an energy of 1.8 MJ and a peak power of 500 TW.

It has 240 beamlets, each with a 38.0 cm aperture. Its amplifier slab configuration is designated by 11-5-3; with 11 slabs in the main amplifier, 5 slabs in the switch amplifier, and 3 slabs in the booster amplifier. It is assumed to have a Nova style frequency tripler with a dynamic range of ~2, a peak tripling efficiency of 70%, and an energy tripling efficiency of ~52%. The design margin was modeled by assuming that the transmission of the UV beam transport optics and the kinoform phase plate were 86% and 85% respectively.

NIF Configuration Summary
Design 1

NIF Configuration Summary

Engineering Design Information from CHAINOP for Laser Design Basis Study

- W. Williams
x31945

Design summary for: ***Design # 1 for LDB report (1.2 MJ/336 TW) (LD#1)***

- 192 beamlets
- 12 beamlines
- 4 x 4 amps
- slab layout: 11 5 3
- 35 cm hard aperture
- laser slab thickness (cm): 3.17
- free-air expl fctn (%): 20

- contrast ratio of 3w pulse: 50:1
- design pulse length (ns): 4.80
- design inj energy (J): 0.2521

- chain output:	power (GW)	energy (kJ)
1w @ freq conv	3276.9	15.73
3w @ LEH(above*.9*.85*X)	1754.8	6.26
(freq conv eff X (power):	0.7)	
(freq conv eff X (energy):	0.52)	

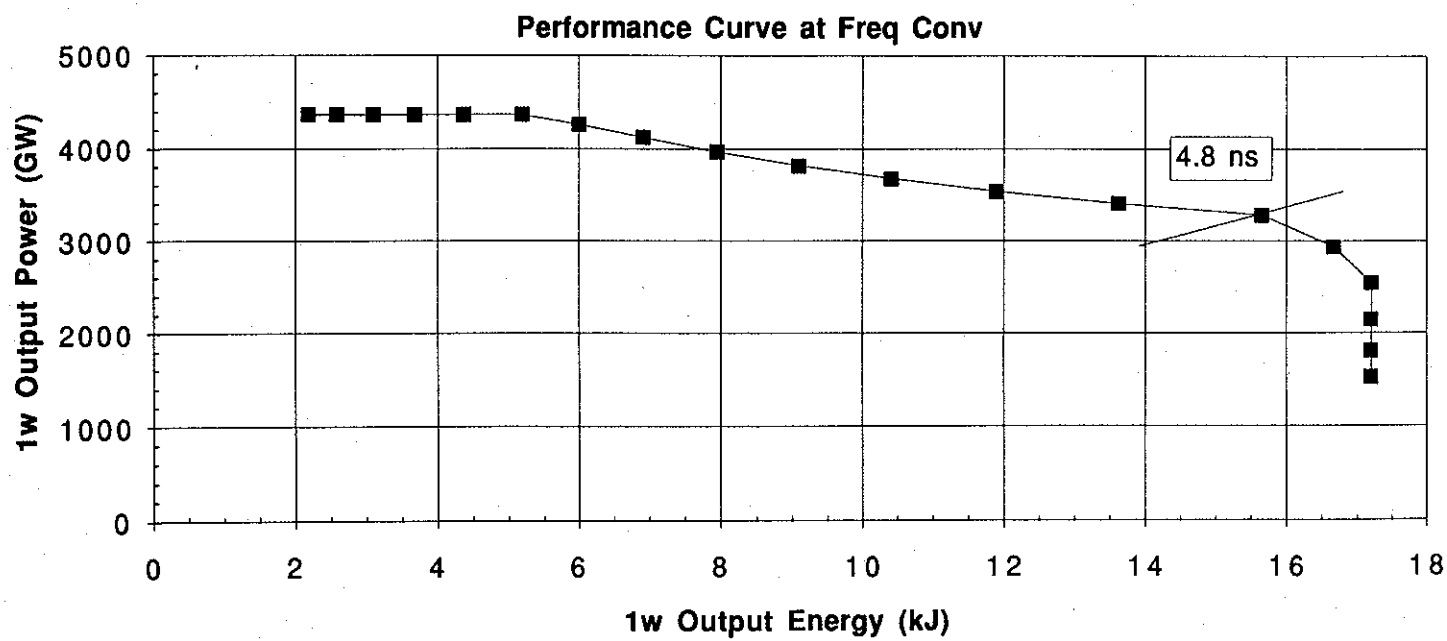

7/2/93 11:52 AM
format rev A

Figure 1: Baseline layout dimensions from CHAINOP (drawing not to scale; dimensions in m)

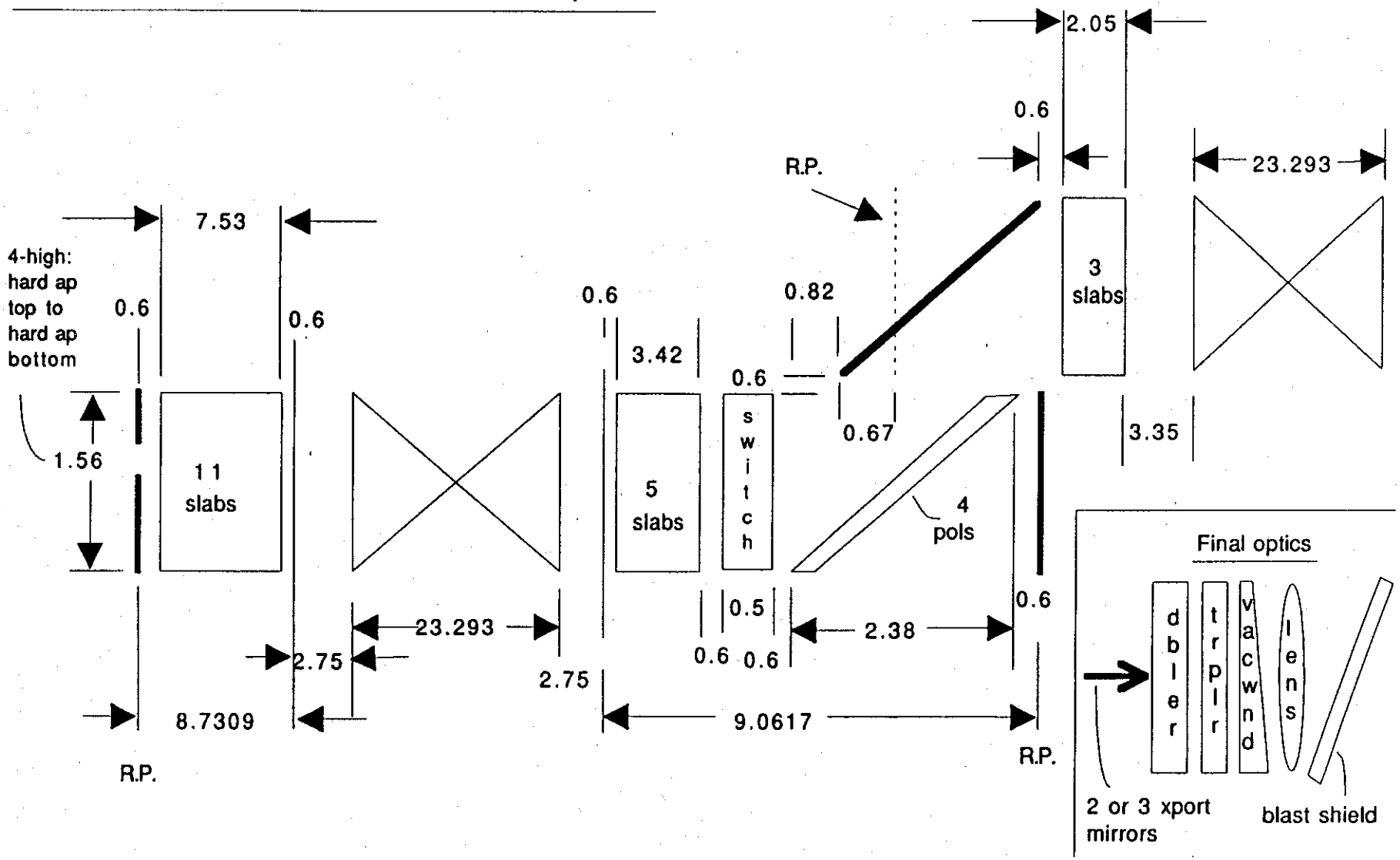

4/29/93 10:17 AM
form rev A

Design information by WBS element:

3.1 Front End

Injection energy (J):	0.008673 at 1 ns
(nominal gain/loss)	0.24598 at 4.8 ns
	0.62652 at 12 ns

3.2 Main Amplification System (see Figures 1-4)

MSA equivalency:	1	
Amplifier numeric gain (pumped/unpumped ratio):		
main amp:	10.92	
switch amp:	2.8715	
boost amp:	1.8411	
Cavity spatial filter length (m):	23.293	
Axial ghost focus standoff (amp end to lens)(m):	3.35	
Cavity component end spacing (m):	0.6	
Polarizer axial (z) length (m):	2.38	
Switch axial (z) length (m):	0.5	
Center point to center point laser slab spacing (cm):		
in x (per N. Frank) (see Fig 5):	51.58	
in y (per N. Frank) (see Fig 5):	43.75	
in z (per CHAINOP input):	68.46	
Hard ap edge to hard ap edge laser slab spacing (cm):		
in x (per N. Frank) (see Fig 5):	13.21	
in y (per N. Frank) (see Fig 5):	5.38	
in z (per CHAINOP input) (see Fig 4):	9	
Minimum clear aperture size (cm) (width/height):		
at main amp:	35.0	34.9
at switch amp:	35.0	35.0
at SF lens:	35.2	35.8

at cavity mirrors:	34.4	32.3	
PC switch:	34.7	33.5	
Polarizer	34.6	33.2	
Extra width/height on optics for holders (cm):			
Phosphate laser glass in all amps:	0		
SiO2 cavity SF lens:	1		
BK7 cavity mirrors:	1		
KD*P PC switch:	2		
SiO2 PC switch windows:	1		
HiQ BK7 polarizer:	1		
Optical material sizes (cm) (width/height/thickness):			
Phosphate laser glass in all amps:	69.1	38.4	3.2
SiO2 cavity SF lens:	36.2	36.8	3.6
BK7 cavity mirrors:	35.4	33.3	8.0
KD*P PC switch:	36.7	35.5	1.3
SiO2 PC switch windows:	35.7	34.5	4.0
HiQ BK7 polarizer:	35.6	64.4	7.1

3.3 Beam Transport System

Transport spatial filter length (m): (CHAINOP assumes this to be the same as the cavity SF length. The actual difference will have some impact on pinhole width)	23.293
Axial ghost focus standoff (amp end to lens) (m): (assumed to be the same as the cavity standoff for beam size calcs and Figure 1)	3.35

3.4 Power Conditioning

Pump efficiency (%):	
in main amp:	0.043
in switch amp:	0.0418
in boost amp:	0.0403

Pumping energy density (J/cc):	
in main amp:	0.3088
in switch amp:	0.29977
in boost amp:	0.2891
Required bank energy per chain (kJ) (no margain):	993.8

6.0 Optical Materials:

Component:	Dimensions (cm) Width	Height	Thickness	Piece Vol. (liters)	Piece Wt (kg)	Piece Finised Area (cm2)
Laser glass slabs (phosphate)	69.1	38.4	3.2	8.40	23.77	5303
Spatial filter lenses (SiO2)	36.2	36.8	3.6	4.79	10.54	2663
Final focus lenses (SiO2)	39.4	37.3	3.6	5.30	11.66	2945
Vacuum windows (SiO2)	35.4	33.3	3.6	4.25	9.36	2362
Blast shields (SiO2)	35.4	33.3	4.0	4.72	10.39	2362
Pockels cell windows (SiO2)	35.7	34.5	4.0	4.93	10.85	2465
Polarizer (HiQ BK7)	35.6	64.4	7.1	16.29	40.88	4587
Doubler crystal (KDP)	36.4	34.3	0.9	1.13	2.65	2502
Tripler crystal (KD*P)	36.4	34.3	0.9	1.13	2.65	2502
PC crystal (80% KD*P)	36.7	35.5	1.3	1.69	3.98	2607
Cavity mirrors (BK7)	35.4	33.3	8.0	9.45	23.72	1181
Transport mirrors (BK7) *	40.7	37.3	8.0	12.14	30.48	1518
Elbow mirrors (BK7)	35.5	58.0	8.0	16.47	41.34	2059

*effective dimensions

Component:	NIF # Pieces	Tot NIF Vol (liters)	Tot NIF Area (m2)
Laser glass slabs (phosphate)	3648	30646	1934.5
Spatial filter lenses (SiO2)	768	3681	204.5
Final focus lenses (SiO2)	192	1018	56.5
Vacuum windows (SiO2)	192	816	45.4
Blast shields (SiO2)	192	907	45.4
Pockels cell windows (SiO2)	384	1893	94.7
Polarizer (HiQ BK7)	192	3127	88.1
Doubler crystal (KDP)	192	216	48.0
Tripler crystal (KD*P)	192	216	48.0
PC crystal (80% KD*P)	192	325	50.1
Cavity mirrors (BK7)	384	3629	45.4
Transport mirrors (BK7)	512	6218	77.7
Elbow mirrors (BK7)	192	3162	39.5

Summary:

Total laser glass vol (kl):	30.65
Total SiO2 vol (kl):	8.32
Total std/HiQ BK7 vol (kl):	16.14
Total KD*P/KDP vol (kl):	0.76
Total optical matls vol (kl):	55.86
Total las glass area (m2):	1934.5
Total SiO2 area (m2):	446.4
Total std/HiQ BK7 area (m2):	250.7
Total KD*P/KDP area (m2):	146.1
Total optical matls area (m2):	2777.7

Minimum required clear aperture (these values dictate piece sizes):

Component:	Width (cm):	Height (cm):
Main amp laser slabs	35.0	34.9
Switch amp laser slabs	35.0	35.0
Booster amp laser slabs	34.7	32.3
Cavity spatial filter lenses	35.2	35.8
Xport spatial filter lenses	34.9	32.3
PC switch KD*P crystal	34.7	33.5
PC Windows	34.7	33.5
Polarizer	34.6	33.2
Cavity mirrors	34.4	32.3
Elbow mirrors	34.5	32.3
Transport mirrors	34.4	32.3
Doubler KDP crystal	34.4	32.3
Tripler KD*P crystal	34.4	32.3
Vacuum windows	34.4	32.3
Final focus lenses	34.4	32.3
Blast shields	34.4	32.3

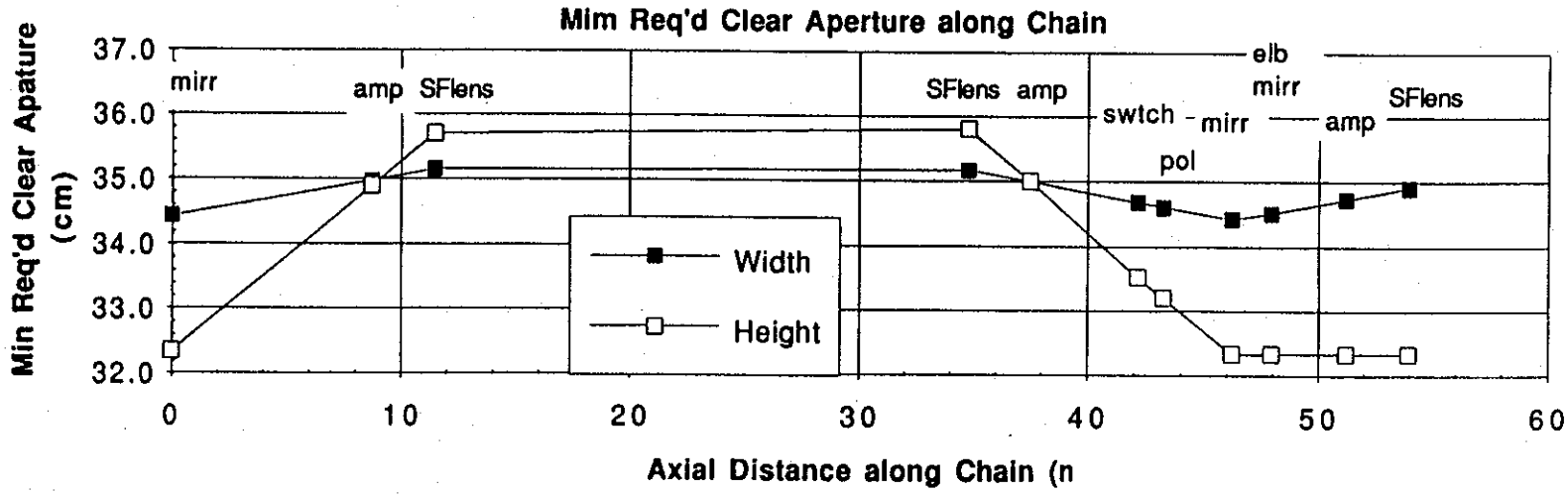

4/29/93 10:17 AM
format rev A

Figure 2: Amplifier directional fiducial

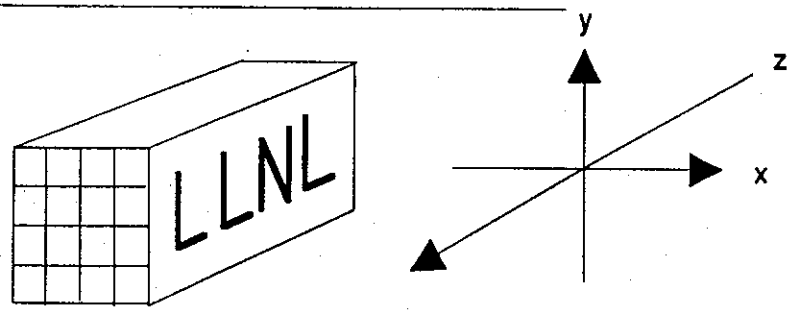

Figure 4: Slab spacing in Z direction

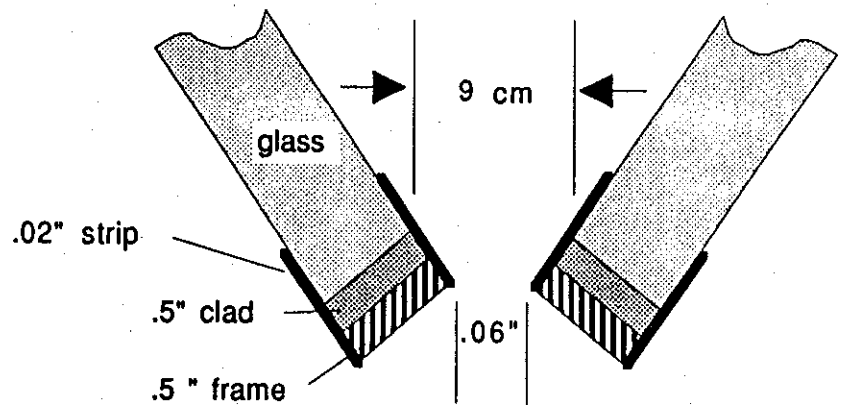

Figure 3: Aperture dimensions viewed parallel to beam

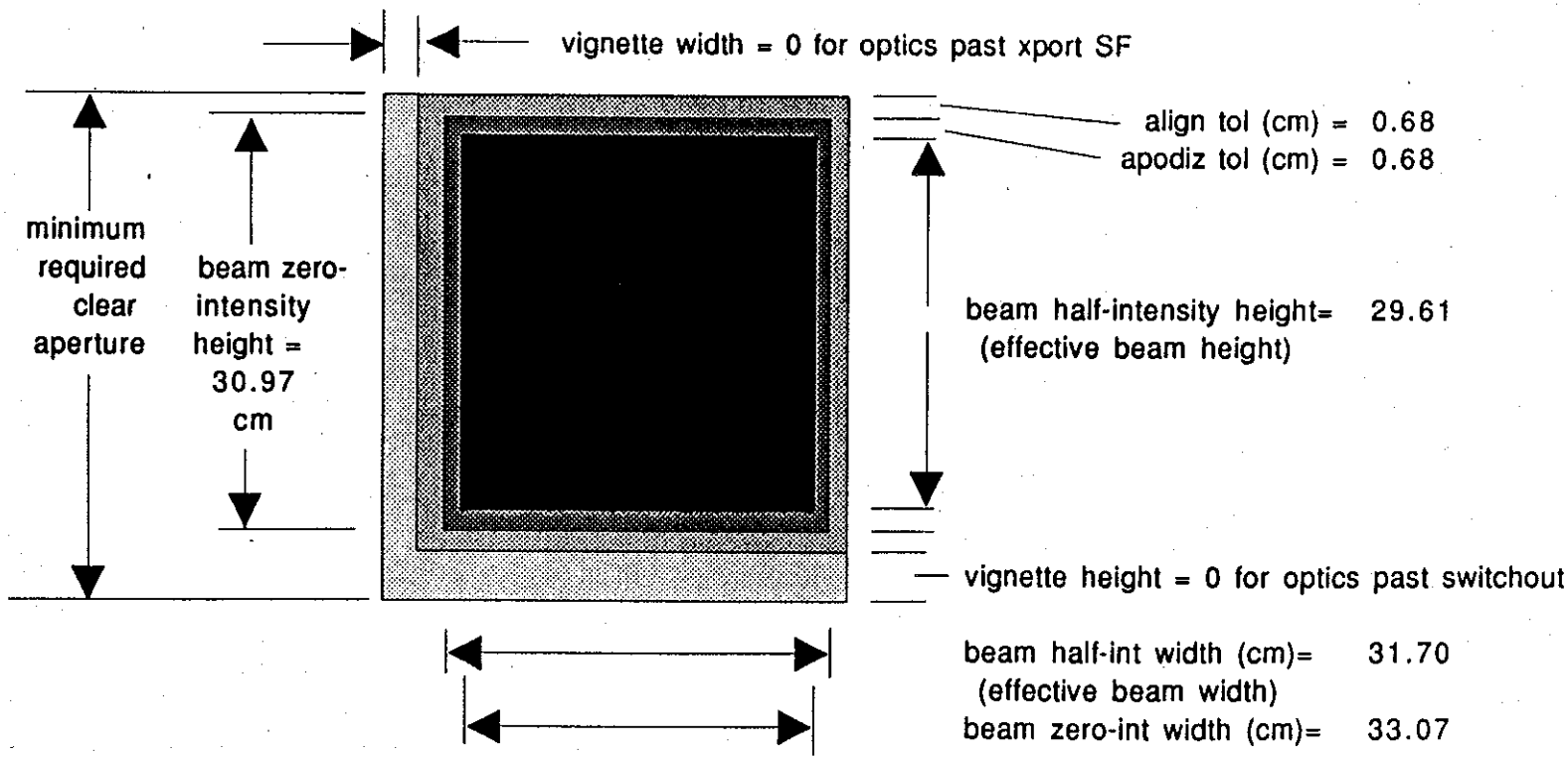

Figure 5: Slab spacing in X and Y directions (cm) for 2x2 amp quadrant

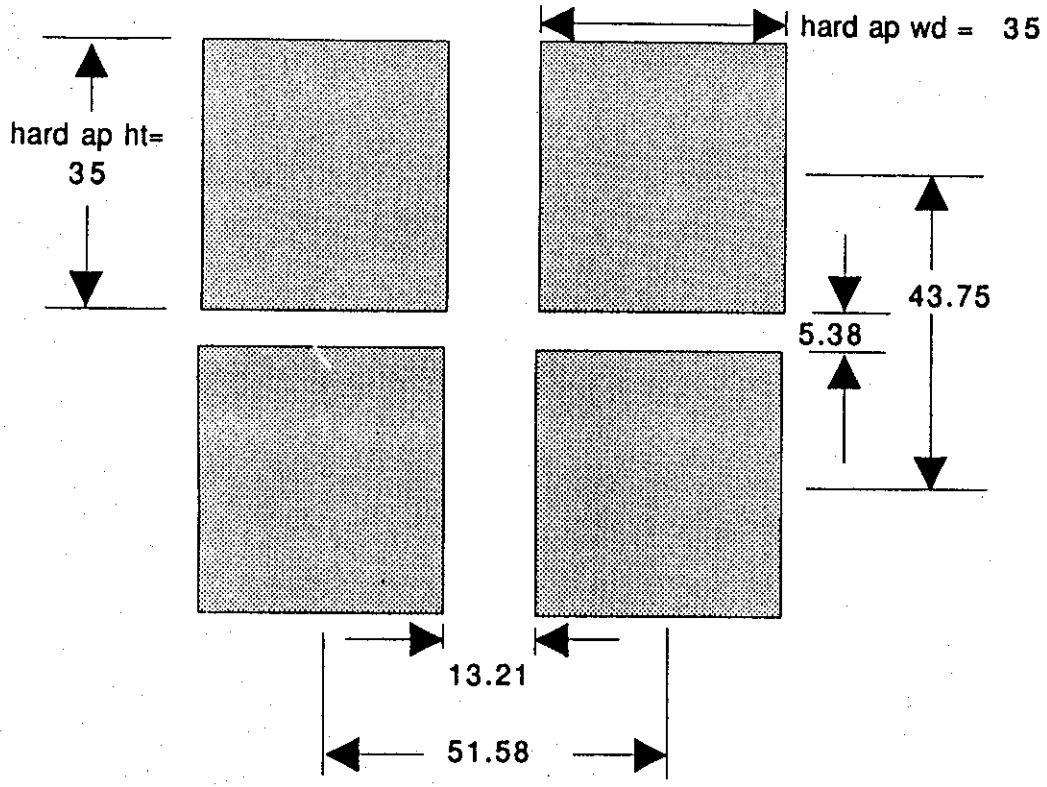

Inputs (mostly from CHAINOP output):

Design ID: Laser Design #1 (run 3/22/93 6:13 pm)

Hard aperture width (cm): 35 height (cm): 35

Laser glass slab dimensions (cm):

length:	69.106
width:	38.368
thickness:	3.1684

Extra width/height for holder (cm):

		Thckns (cm):
Laser glass slabs (phosphate)	0	3.1684
Spatial filter lenses (SiO2)	1	3.6
Final focus lenses (SiO2)	5	3.6
Vacuum windows (SiO2)	1	3.6
Blast shields (SiO2)	1	4
Pockels cell windows (SiO2)	1	4
Polarizer (HiQ BK7)	1	7.1
Doubler crystal (KDP)	2	0.9
Tripler crystal (KD*P)	2	0.9
PC crystal (80% KD*P)	2	1.3
Cavity mirrors (BK7)	1	8
Transport mirrors (BK7)	1	8
Elbow mirrors (BK7)	1	8

Number of beamlets:	192
Main amp # slabs:	11
Switch amp # slabs:	5
Boost amp # slabs:	3
Polarizer refr indx:	1.45
Laser glass density (gm/cc):	2.83
SiO2 density (gm/cc):	2.2
HiQ BK7 density (gm/cc):	2.51
BK7 density (gm/cc):	2.51
Explosion fraction:	0.2

Main amp numeric gain:	10.92
Switch amp numeric gain:	2.8715
Boost amp numeric gain:	1.8411

Doubler (KDP) density (gm/cc):	2.35
Tripler (KD*P) density (gm/cc):	2.35
PC (80% deut KD*P) density (gm/cc):	2.35

Output pow (GW)/eng (kJ):

(fm outpt; use 0.9 xpt and 0.85 knfm below)

1w	3276.9	15729
3w	2203.2	10575

Bank energy (kJ):	993.8
MSA equivalency:	1
Apoization border (cm):	0.68168
Beam zero-int width (cm):	33.068
Beam zero-int height (cm):	30.974
Alignment border (cm):	0.68168
Pinhole width (cm):	0.73062
Pinhole height (cm):	3.4218
Main-side to-mirr dist (m):	8.7309
Swtch-sde to-mirr dist (m):	9.0617
Spatial filter length (m):	23.293
Slab axial length (cm):	59.463
Num of polarizer lgths:	4
Switch length (m):	0.5
Extra length in cav (m):	5.5
Cav comp and end sp (m):	0.6
Slab xtr lg for holders (cm):	9
# slabs in booster amp:	3

	Pump Eff(%):	Energy Dens(J/cc):
Main amp:	4.30%	0.3088
Switch amp:	4.18%	0.29977
Boost amp:	4.03%	0.2891

Injection energy at 1 ns (J):	0.008673
Injection energy at 4.8 ns:	0.24598
Injection energy at 11 ns:	0.62652
Design pulse length (ns):	4.8

Laser Design Revision History

#1	4/29/93	Original

Format History

A	4/29/93	Original

```
$ cat b110503.out
========================================= Started at Wed Mar 17 18:05:47 1993
Cost-optimal multipass design - CHAINOPA - Copyright Mar 17 1993 John Trenholme
Parameter file: "B110503.PAR"    Chain file: "UPGRADE.CHN"

Initial parameters:

##  -- Description --                          Value    -- Type --
 1  Chain input energy in Joules_____________:  .20000  Varied to optimize
 2  Energy density (J/cc) infinite length___:  .25000  Varied to optimize
 3  Slab caliper thickness in centimeters___:  3.0000  Varied to optimize
 4  Number of slabs in main amplifier_______:  11.000  Specified
 5  Number of slabs in switch amplifier_____:  5.0000  Specified
 6  Number of slabs in booster amplifier____:  3.0000  Specified
 7  Amp hard aperture width in centimeters__:  35.000  Specified
 8  Amplifier hard aperture area (cm^2)_____:  1225.0  Specified as 1225
 9  Laser square-pulse pulsewidth (ns)______:  4.8000  Specified
10  Gain cross section (E-20 cm^2)__________:  3.5000  Specified
11  Slab single surface transmission________:  .99500  Specified
12  Slab bulk loss coefficient (per meter)__:  .05000  Specified
13  Relative stored energy (MSA is unity)___:  1.0000  Specified
14  Explosion fraction of lamps (free air)__:  .20000  Specified
15  Extra length in cavity in meters________:  5.5000  Specified
16  Slab extra edge in centimeters__________:  .10000  Specified
17  Slab extra edge/thickness ratio_________:  .50000  Specified
18  Slab extra length for holders etc (cm)__:  9.0000  Specified
19  Switch length (m)_______________________:  .50000  Specified
20  Cavity component end & spacing (m)______:  .60000  Specified
21  Number of polarizer lengths per beam____:  4.0000  Specified
22  Injection mirror area (cm^2)____________:  .50000  Specified
23  Beam dump area - both parts (cm^2)______:  50.000  Specified
24  Apodizing fixed per-side margin (cm)____:  .50000  Specified
25  Apodizing multiplier of SQRT(lambda*L)__:  1.5000  Specified
26  Alignment fixed per-side margin (cm)____:  .50000  Specified
27  Alignment multiplier of SQRT(lambda*L)__:  1.5000  Specified
28  Fluence peak/average just after filter__:  1.4000  Specified
29  Peak/average multiplier of gain term____:  .10000  Specified
30  Peak/average multiplier of delta-B______:  1.0000  Specified
31  Bank+control+wires+lamp cost ($/J)______:  .15000  Specified
32  Glass bulk cost ($/cc)__________________:  .88000  Specified
33  Slab finish & amp parts ($/cm^2/slab)___:  5.0000  Specified
34  Transport fixed cost /area ($/cm^2)_____:  220.00  Specified
35  Xport cost/area per meter ($/cm^2/m)____:  1.7000  Specified
36  Fixed cost per beam ($)_________________:  1.300M  Specified
37  Cost of input energy relative to output:   1000.0  Specified
38  Minimum slab thickness (cm)_____________:  .10000  Constrained - lower limit
39  Maximum slab thickness (cm)_____________:  99.000  Constrained - upper limit
40  Maximum slab finished volume (liters)___:  99.000  Constrained - upper limit
41  Maximum fraction of given damage levels:   1.0000  Constrained - upper limit
42  Maximum between-filter B integral_______:  2.2000  Constrained - upper limit
43  Maximum first/last photon gain ratio____:  35.000  Constrained - upper limit

Step parameter 9 "Laser square-pulse pulsewidth (ns)" Repeat 5 times each
Parameter value:  4.8

CHAINOPA optimizing 3 params with Nelder-Mead simplex: Wed Mar 17 18:05:47 1993
NM init: scale .01000 count 500.00 value 5.000u size 10.00u
NM last: scale 100.0u count 200.00 value 20.00n size 50.00n
Constraint widths: 0.5 0.1

"Laser square-pulse pulsewidth (ns)" = 4.8000
## engyIn rhoInf thick  count1 count2 count3 apWide engOut cost-K J/K$  Designs
 1 .23946 .31669 3.1709 11.000 5.0000 3.0000 35.000 10574. 2165.5 4.7698    530
 2 .24104 .31665 3.1703 11.000 5.0000 3.0000 35.000 10575. 2165.2 4.7698    436
```

```
 3 .24192 .31663 3.1699 11.000 5.0000 3.0000 35.000 10575. 2165.0 4.7699    287
 4 .24405 .31658 3.1691 11.000 5.0000 3.0000 35.000 10575. 2164.6 4.7699    220
 5 .24598 .31653 3.1684 11.000 5.0000 3.0000 35.000 10575. 2164.3 4.7699    246

Best chain with "Laser square-pulse pulsewidth (ns)" = 4.8000  (case 5)

Slab quantities:
  thickness     3.1684 cm     width  69.106 cm        height 38.368 cm
  covered edge  3.3684 cm     volume 8.4008 liters    pumped 7.2898 liters
  axial length 59.463 cm      module 68.463 cm        area   2651.5 cm^2/side

Amplifier quantities:      Main amp   Switch amp Boost amp
                           --------   ---------- ---------
  slab count               11.000     5.0000     3.0000     total 19.000
  pump efficiency          4.3038%    4.1780%    4.0292%    (long amp 4.4115%)
  energy density (J/cc)    .30880     .29977     .28910     (long amp .31653)
  gain coefficient (/m)    5.7291     5.5616     5.3635     (long amp 5.8726)
  numeric gain (pumpd/un)  10.920     2.8715     1.8411
  unpumped transmission    .87710     .94213     .96487
  stored energy (J)        24762.     10926.     6322.4     total 42011.
  bank energy (kJ)         575.36     261.53     156.92     total 993.80

Cavity layout:
  total length of cavity 46.585 m     length of spatial filter 23.293 m
  distance from main-side mirror to farthest slab   8.7309 m
  distance from switch-side mirror to farthest slab 9.0617 m

Beam geometry - vignette, alignment, apodization:
  -----quantity-----      --width--      --height-
  pinhole spacing         .73062 cm      3.4218 cm
  injection mirror        .73062 cm      .68435 cm     area .50000 cm^2
  beam dump (2 parts)     7.3062 cm      6.8435 cm     area 50.000 cm^2
  beam angles             .12547 mrad    .58762 mrad
  beam vignette shift     .54772 cm      2.5652 cm     on main amp side
  beam vignette shift     .56847 cm      2.6624 cm     on switch side   (worst)
  hard metal aperture     35.000 cm      35.000 cm     area 1225.0 cm^2
  beam zero-intensity     33.068 cm      30.974 cm     area 1024.3 cm^2
  beam half-intensity     31.705 cm      29.611 cm     area 938.81 cm^2
  apodization border (all 4 sides) .68168 cm (to 1/2 intensity)
  alignment border (all 4 sides)   .68168 cm
  fill factor from vignette        .90893 of area
  fill factor from alignment       .91991 of area
  fill factor from apodization     .91657 of area
  total fill factor effective/hard .76637 of area (effective is 1/2 intensity)

Marginal costs of one aperture:
  bank energy 993.80 kJ at .15000 $/J            149.07 K$
  laser glass 159.62 l  at .88000 $/cc            140.46 K$
  amp parts & slab finish at 5.0000 $/cm^2/slab   138.51 K$
  ----subtotal of amplifier-related costs         428.04 K$
  cavity, xport, convert & focus costs (/cm^2)    320.75 K$
  cavity, xport, convert & focus costs (/cm^2/m)  115.46 K$
  ----subtotal of cavity, xport, convert & focus  436.21 K$
Fixed costs (includes fixed part of all above)    1300.0 K$
                                                  ------
Total cost of one aperture                        2164.3 K$

Drive energy cost (.24598 J at 209.52 K$/J)       51.539 K$

Chain small signal gain 557646

Upgrade 350mm LG-750 3.5-pass switched multipass with booster - John Trenholme

Item      Thick   Refr.   Nonlin  Angle   Pasv    Gain    Damage          Item
```

Name	(cm)	index	coeff.	(deg)	xsmn	(p/u)	type	##
ENERGY	.24598 Joules							1
PULSWID	4.8000 nanoseconds							2
WAVELEN	1.0530 micrometers							3
SATFLU	4.5200 J/cm^2 to 3.3500 J/cm^2 at .67400 ns -> 4.5187 J/cm^2							4
DAMAGE	type 1 22.000 *(tau/ 1.0000 ns)^ .40000 J/cm^2 AR							5
DAMAGE	type 2 22.000 *(tau/ 1.0000 ns)^ .40000 J/cm^2 Glas							6
DAMAGE	type 3 19.000 *(tau/ 1.0000 ns)^ .30000 J/cm^2 HR							7
DAMAGE	type 4 14.000 *(tau/ 1.0000 ns)^ .30000 J/cm^2 PolX							8
DAMAGE	type 5 16.000 *(tau/ 1.0000 ns)^ .30000 J/cm^2 PolR							9
DAMAGE	type 6 20.000 *(tau/ 1.0000 ns)^ .50000 J/cm^2 KD*P							10
DAMAGE	type 7 9.0000 *(tau/ 1.0000 ns)^ .50000 J/cm^2 KDP3							11
DAMAGE	type 8 10.000 *(tau/ 1.0000 ns)^ .40000 J/cm^2 AR3w							12
FILL	.76637 (area fraction)							13
AREA	1225.0 cm^2 -> 938.81 cm^2							14
INJECT	peak/average 3.0000					damage	3 HR	15
GOTO	label 1 way -1 (component 34)							16
REVERSE	------				.99000		3 HR	17
AMP_#1	34.852	1.5190	2.8900	56.642	.87710	10.920	2 Glas	18
SF_LENS	3.6000	1.4500	2.7000	0.0	.99000		1 AR	19
PINHOLE								20
SF_LENS	3.6000	1.4500	2.7000	0.0	.99000		1 AR	21
AMP_#2	15.842	1.5190	2.8900	56.642	.94213	2.8715	2 Glas	22
POKLWIND	3.6000	1.4500	2.7000	0.0	.99000		6 KD*P	23
POKLKD*P	1.3000	1.5000	2.8900	0.0	.95200		6 KD*P	24
POKLWIND	3.6000	1.4500	2.7000	0.0	.99000		6 KD*P	25
SWITCH	at pass 4 way 1							26
ENTRY	way -1							27
POL_XSMN	7.1000	1.4500	2.7000	55.408	.97000		4 PolX	28
REVERSE	------				.99000		3 HR	29
POL_REFL	0.0	1.4500	2.7000	0.0	.98000		5 PolR	30
BEAMDUMP	peak/average 4.0000					damage	1 AR	31
AMP_#3	9.5051	1.5190	2.8900	56.642	.96487	1.8411	2 Glas	32
SF_LENS	3.6000	1.4500	2.7000	0.0	.99000		1 AR	33
LABEL	number 1							34
PINHOLE								35
SF_LENS	3.6000	1.4500	2.7000	0.0	.99000		1 AR	36
XPORT4M	0.0	1.0000	0.0	0.0	.98000		3 HR	37
TRIPLER1	.90000	1.5000	2.9000	0.0	.70000		6 KD*P	38
TRIPLER3	.90000	1.5000	8.1000	0.0	1.0000		7 KDP3	39
FOCUSLNS	3.6000	1.4500	8.1000	0.0	.99000		8 AR3w	40
VACWINDO	3.6000	1.4500	8.1000	0.0	.99000		8 AR3w	41
BLSTSHLD	4.0000	1.4500	8.1000	0.0	.98000		8 AR3w	42

Item Name	Energy (J)	Power (GW)	Peak J/cm^2	Peak/ avg.	Added B int	Total B int	Energy change	Last gain	Gain ratio	Item ##
INJECT	.24598	.17637	1.4759	3.0000	0.0	0.0	1.0000	1.0000	1.0000	15
SF_LENS	.24352	.17460	366.8u	1.4000	10.84u	10.84u	.99000	.99000	1.0000	33
AMP_#3	.43259	.31016	645.1u	1.4000	32.69u	43.53u	1.7764	1.7586	1.0000	32
BEAMDUMP	-.3359	-.2408	-.0269	4.0000	0.0	43.53u	1.0000	1.7586	1.0000	31
POL_REFL	.42394	.30396	645.1u	1.4000	0.0	43.53u	.98000	1.7234	1.0000	30
SWITCH	Pass1									26
POKLWIND	.41970	.30092	632.2u	1.4000	18.68u	62.21u	.99000	1.7062	1.0000	25
POKLKD*P	.39956	.28647	625.9u	1.4000	7.011u	69.23u	.95200	1.6243	1.0000	24
POKLWIND	.39556	.28361	595.8u	1.4000	17.61u	86.84u	.99000	1.6081	1.0000	23
AMP_#2	1.0701	.76718	1.596m	1.4000	112.0u	198.9u	2.7052	4.3499	1.0001	22
SF_LENS	1.0594	.75951	1.596m	1.4000	47.16u	246.0u	.99000	4.3064	1.0001	21
PINHOLE						------				20
SF_LENS	1.0488	.75192	1.580m	1.4000	46.69u	46.69u	.99000	4.2634	1.0001	19
AMP_#1	10.037	7.1909	.01497	1.4001	1.449m	1.495m	9.5705	40.772	1.0016	18
REVERSE	9.9370	7.1190	.01497	1.4001	0.0	1.495m	.99000	40.365	1.0016	17
AMP_#1	94.373	67.144	.14089	1.4015	.01361	.01511	9.4971	380.70	1.0156	18

```
SF_LENS   93.429 66.472 .14089    1.4015 4.127m .01924   .99000 376.90 1.0156  19
PINHOLE                                         ------                          20
SF_LENS   92.495 65.808 .13933    1.4000 4.086m 4.086m   .99000 373.13 1.0156  21
AMP_#2    247.03 173.54 .36918    1.4030 .02565 .02974   2.6707 983.98 1.0418  22
POKLWIND  244.56 171.81 .36918    1.4030 .01067 .04041   .99000 974.14 1.0418  23
POKLKD*P  232.82 163.56 .36577    1.4041 4.003m .04441   .95200 927.38 1.0418  24
POKLWIND  230.49 161.92 .34832    1.4045 .01005 .05446   .99000 918.11 1.0418  25
SWITCH       Pass2                                                              26
POL_XSMN  223.58 157.07 .34510*4  1.4056 .01628 .07074   .97000 890.56 1.0418  28
REVERSE   221.34 155.50 .33474    1.4056    0.0 .07074   .99000 881.66 1.0418  29
POL_XSMN  214.70 150.83 .33180*4  1.4073 .01563 .08638   .97000 855.21 1.0418  28
SWITCH       Pass3                                                              26
POKLWIND  212.55 149.32 .32224    1.4090 9.272m .09565   .99000 846.66 1.0418  25
POKLKD*P  202.35 142.16 .31924    1.4100 3.479m .09913   .95200 806.02 1.0418  24
POKLWIND  200.33 140.73 .30400    1.4104 8.738m .10786   .99000 797.96 1.0418  23
AMP_#2    514.64 352.37 .77704    1.4175 .05322 .16108   2.5690 1997.9 1.0973  22
SF_LENS   509.49 348.85 .77704    1.4175 .02166 .18274   .99000 1977.9 1.0973  21
PINHOLE                                         ------                          20
SF_LENS   504.40 345.36 .75978    1.4000 .02144 .02144   .99000 1958.2 1.0973  19
AMP_#1    3622.5 1941.5 5.6666    1.4685 .50060 .52204   7.1818 11009. 1.8408  18
REVERSE   3586.3 1922.1 5.6666    1.4685    0.0 .52204   .99000 10898. 1.8408  17
AMP_#1    10215. 3395.3 21.212    1.9495 1.3489 1.8710   2.8484 19251. 5.8587  18
SF_LENS   10113. 3361.3 21.212    1.9495 .20871 2.0797   .99000 19059. 5.8587  19
PINHOLE                                         ------                          20
SF_LENS   10012. 3327.7 15.081    1.4000 .20662 .20662   .99000 18868. 5.8587  21
AMP_#2    14622. 3636.9 24.528    1.5749 .80454 1.0112   1.4605 20621. 13.422  22
POKLWIND  14476. 3600.5 24.528*6  1.5749 .22356 1.2347   .99000 20415. 13.422  23
POKLKD*P  13781. 3427.7 25.345*6  1.6437 .08389 1.3186   .95200 19435. 13.422  24
POKLWIND  13643. 3393.4 24.570*6  1.6738 .21070 1.5293   .99000 19241. 13.422  25
SWITCH       Pass4 - switched out                                               29
POL_REFL  13370. 3325.6 25.598*5  1.7615    0.0 1.5293   .98000 18856. 13.422  30
BEAMDUMP  267.40 66.511 21.392    4.0000    0.0 1.5293   1.0000 18856. 13.422  31
AMP_#3    16376. 3411.6 35.484*2  2.0342 .46437 1.9937   1.2248 19344. 23.241  32
SF_LENS   16212. 3377.5 35.484*1  2.0342 .20971 2.2034*  .99000 19151. 23.241  33
PINHOLE                                         ------                          35
SF_LENS   16050. 3343.8 24.176    1.4000 .20761 .20761   .99000 18959. 23.241  36
XPORT4M   15729. 3276.9 24.329*3  1.4231    0.0 .20761   .98000 18580. 23.241  37
TRIPLER1  11010. 2293.8 23.843    1.4231 .04548 .25310   .70000 13006. 23.241  38
TRIPLER3  11010. 2293.8 16.757*7  1.4288 .10628 .35938   1.0000 13006. 23.241  39
FOCUSLNS  10900. 2270.9 16.926    1.4432 .42300 .78238   .99000 12876. 23.241  40
VACWINDO  10791. 2248.2 17.633    1.5187 .41877 1.2011   .99000 12747. 23.241  41
BLSTSHLD  10575. 2203.2 18.764*8  1.6324 .45831 1.6595   .98000 12492. 23.241  42

type:   1 AR     2 Glas   3 HR     4 PolX   5 PolR   6 KD*P   7 KDP3   8 AR3w
damag:  41.202   41.202   30.418   22.413   25.615   43.818   19.718   18.728
max:    35.484   35.484   24.329   .34510   25.598   25.345   16.757   18.764
ratio:  .86122   .86122   .79984   .01540   .99935*  .57842   .84983   1.0019*

energy 10575.  max fluence/damage 1.0019* max delta-B 2.2034* chain B 6.1448
gRatio 23.241  costEf 4.7727 J/K$ X penalty .99940 --> 4.7699 J/K$

-- Summary for "B110503.PAR" & "UPGRADE.CHN" -- Wed Mar 17 18:05:47 1993 --
 pulsWd engyIn rhoInf thick  count1 count2 count3 apWide engOut cost-K J/K$
 .50000 3.401m .31653 3.1684 11.000 5.0000 3.0000 35.000 1467.7 2164.3 .67491
 .59000 4.191m .31653 3.1684 11.000 5.0000 3.0000 35.000 1731.9 2164.3 .79631
 .71000 5.344m .31653 3.1684 11.000 5.0000 3.0000 35.000 2084.1 2164.3 .95814
 .84000 6.734m .31653 3.1684 11.000 5.0000 3.0000 35.000 2465.7 2164.3 1.1334
 1.0000 8.673m .31653 3.1684 11.000 5.0000 3.0000 35.000 2935.4 2164.3 1.3490
 1.1900 .01136 .31653 3.1684 11.000 5.0000 3.0000 35.000 3493.1 2164.3 1.6048
 1.4100 .01448 .31653 3.1684 11.000 5.0000 3.0000 35.000 4044.0 2164.3 1.8590
 1.6800 .01864 .31653 3.1684 11.000 5.0000 3.0000 35.000 4654.3 2164.3 2.1387
 2.0000 .02445 .31653 3.1684 11.000 5.0000 3.0000 35.000 5342.0 2164.3 2.4534
 2.3800 .03300 .31653 3.1684 11.000 5.0000 3.0000 35.000 6119.5 2164.3 2.8082
 2.8300 .04632 .31653 3.1684 11.000 5.0000 3.0000 35.000 6999.2 2164.3 3.2080
```

3.3600	.06888	.31653	3.1684	11.000	5.0000	3.0000	35.000	7995.9	2164.3	3.6575
4.0000	.11436	.31653	3.1684	11.000	5.0000	3.0000	35.000	9164.0	2164.3	4.1755
4.7600	.23678	.31653	3.1684	11.000	5.0000	3.0000	35.000	10517.	2164.3	4.7457
5.6600	.40162	.31653	3.1684	11.000	5.0000	3.0000	35.000	11201.	2164.3	4.9896
6.7300	.62651	.31653	3.1684	11.000	5.0000	3.0000	35.000	11571.	2164.3	5.0567
8.0000	.62652	.31653	3.1684	11.000	5.0000	3.0000	35.000	11571.	2164.3	5.0568
9.5100	.62652	.31653	3.1684	11.000	5.0000	3.0000	35.000	11571.	2164.3	5.0568
11.300	.62652	.31653	3.1684	11.000	5.0000	3.0000	35.000	11571.	2164.3	5.0568

-- Done at Wed Mar 17 18:05:47 1993 Took 90.77 seconds for 1719 designs --

NIF Configuration Summary
Design 2

NIF Configuration Summary

Engineering Design Information from CHAINOP for Laser Design Basis Study

- W. Williams
x31945

Design summary for: ***Design #2 for LDB Report (1.8 MJ/500 TW)***

- 193.9 beamlets
- 12 beamlines
- 4 x 4 amps
- slab layout: 11 3 3
- 35 cm hard aperture
- laser slab thickness (cm): 3.38
- free-air expl fctn (%): 20

- contrast ratio of 3w pulse: 50:1
- design pulse length (ns): 3.60
- design inj energy (J): 0.5
- chain output:

	power (GW)	energy (kJ)
1w @ freq conv	3960.0	14.30
3w @ LEH(abv*.95*.91*X)	2573.2	9.29
(freq conv eff X (power):	0.75)	
(freq conv eff X (energy):	0.75)	

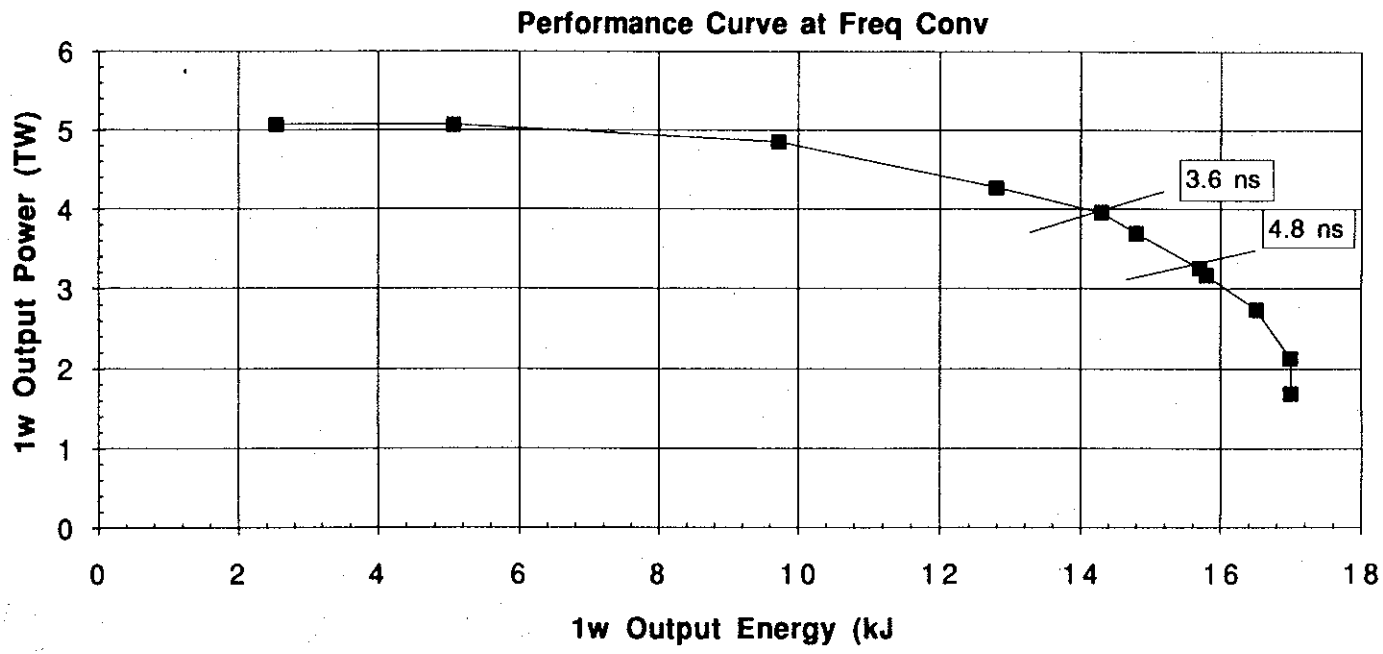

7/2/93 8:18 AM
format rev A

Figure 1: Baseline layout dimensions from CHAINOP (drawing not to scale; dimensions in m)

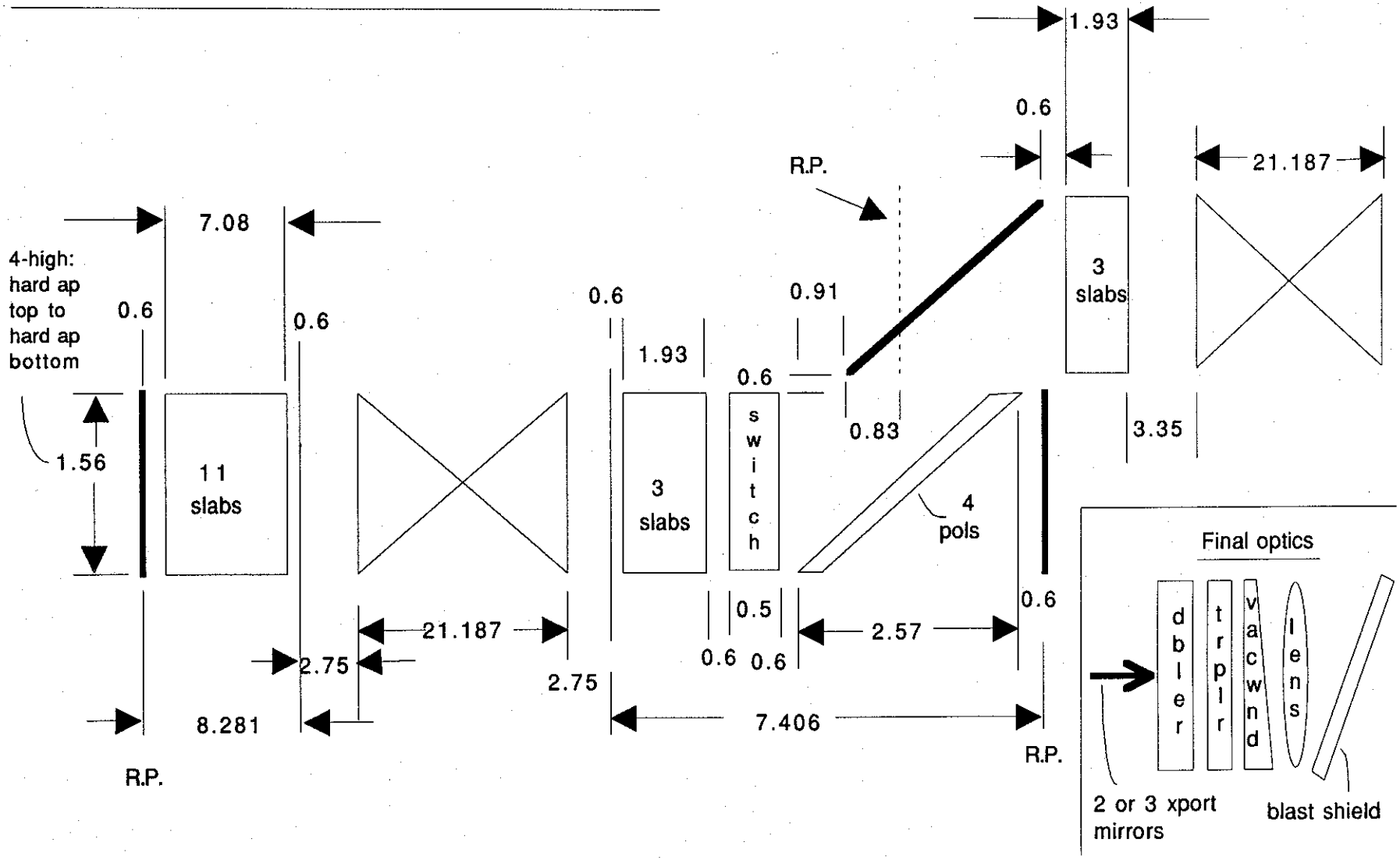

7/2/93 8:07 AM
format rev A

Design information by WBS element:

3.1 Front End

Injection energy (J):	0 at 1 ns
(nominal gain/loss)	500 at 4.8 ns
	0 at 12 ns

3.2 Main Amplification System (see Figures 1-4)

MSA equivalency:	1	
Amplifier numeric gain (pumped/unpumped ratio):		
main amp:	11.63	
switch amp:	1.871	
boost amp:	1.871	
Cavity spatial filter length (m):	21.187	
Axial ghost focus standoff (amp end to lens)(m):	3.35	
Cavity component end spacing (m):	0.6	
Polarizer axial (z) length (m):	2.57	
Switch axial (z) length (m):	0.5	
Center point to center point laser slab spacing (cm):		
in x (per N. Frank) (see Fig 5):	TBD	
in y (per N. Frank) (see Fig 5):	40.38	
in z (per CHAINOP input):	64.37	
Hard ap edge to hard ap edge laser slab spacing (cm):		
in x (per N. Frank) (see Fig 5):	TBD	
in y (per N. Frank) (see Fig 5):	5.38	
in z (per CHAINOP input) (see Fig 4):	4.5	
Minimum clear aperture size (cm) (width/height):		
at main amp:	35.0	35.0
at switch amp:	34.9	34.7
at SF lens:	35.2	35.9

at cavity mirrors:	34.4	32.3	
PC switch:	34.7	33.6	
Polarizer	34.6	33.3	
Extra width/height on optics for holders (cm):			
Phosphate laser glass in all amps:	0		
SiO2 cavity SF lens:	1.5975		
BK7 cavity mirrors:	2		
KD*P PC switch:	1		
SiO2 PC switch windows:	2		
HiQ BK7 polarizer:	2		
Optical material sizes (cm) (width/height/thickness):			
Phosphate laser glass in all amps:	69.5	38.6	3.4
SiO2 cavity SF lens:	36.8	37.5	2.6
BK7 cavity mirrors:	36.4	34.3	8.0
KD*P PC switch:	35.7	34.6	1.0
SiO2 PC switch windows:	36.7	35.6	3.0
HiQ BK7 polarizer:	36.6	68.2	9.0

3.3 Beam Transport System

Transport spatial filter length (m): (CHAINOP assumes this to be the same as the cavity SF length. The actual difference will have some impact on pinhole width)	21.187
Axial ghost focus standoff (amp end to lens) (m): (assumed to be the same as the cavity standoff for beam size calcs and Figure 1)	3.35

3.4 Power Conditioning

Pump efficiency (%):	
in main amp:	0.047
in switch amp:	0.044
in boost amp:	0.044

Pumping energy density (J/cc):	
in main amp:	0.297
in switch amp:	0.278
in boost amp:	0.278
Required bank energy per chain (kJ) (no margain):	837.5

6.0 Optical Materials:

Component:	Dimensions (cm) Width	Height	Thickness	Piece Vol. (liters)	Piece Wt (kg)	Piece Finised Area (cm2)	Notes
Laser glass slabs (phosphate)	69.5	38.6	3.4	9.06	25.63	5360	5.15E+20
Spatial filter lenses (SiO2)	36.8	37.5	2.6	3.59	7.89	2758	Nd3+/cc
Final focus lenses (SiO2)	41.4	39.3	2.9	4.72	10.39	3258	
Vacuum windows (SiO2)	36.4	34.3	5.1	6.31	13.89	2501	
Blast shields (SiO2)	41.4	63.9	1.0	2.65	5.83	5298	
Pockels cell windows (SiO2)	36.7	35.6	3.0	3.93	8.64	2617	
Polarizer (HiQ BK7)	36.6	68.2	9.0	22.48	56.43	4996	Deut frac:
Doubler crystal (KD*P)	35.4	33.3	1.1	1.24	2.91	2361	0%
Tripler crystal (KD*P)	35.4	33.3	0.9	1.00	2.36	2361	60%
PC crystal (KD*P)	35.7	34.6	1.0	1.24	2.91	2475	60%
Cavity mirrors (BK7)	36.4	34.3	8.0	10.00	25.11	1250	
Transport mirrors (BK7) *	41.9	38.4	8.0	12.86	32.27	1607	
Elbow mirrors (BK7)	36.5	60.5	9.0	19.86	49.86	2207	

*effective dimensions

Component:	NIF # Pieces	Tot NIF Vol (liters)	Tot NIF Area (m2)
Laser glass slabs (phosphate)	3296.3	29857	1766.7
Spatial filter lenses (SiO2)	775.6	2781	213.9
Final focus lenses (SiO2)	193.9	916	63.2
Vacuum windows (SiO2)	193.9	1224	48.5
Blast shields (SiO2)	193.9	514	102.7
Pockels cell windows (SiO2)	387.8	1522	101.5
Polarizer (HiQ BK7)	193.9	4359	96.9
Doubler crystal (KD*P)	193.9	240	45.8
Tripler crystal (KD*P)	193.9	195	45.8
PC crystal (KD*P)	193.9	240	48.0
Cavity mirrors (BK7)	387.8	3879	48.5
Transport mirrors (BK7)	517	6648	83.1
Elbow mirrors (BK7)	193.9	3852	42.8

Summary:	
Total laser glass vol (kl):	29.86
Total SiO2 vol (kl):	6.96
Total std/HiQ BK7 vol (kl):	18.74
Total KD*P/KDP vol (kl):	0.67
Total optical matls vol (kl):	56.23
Total las glass area (m2):	1766.7
Total SiO2 area (m2):	529.8
Total std/HiQ BK7 area (m2):	271.3
Total KD*P/KDP area (m2):	139.6
Total optical matls area (m2):	2707.3

Minimum required clear aperture (these values dictate piece sizes):

Component:	Width (cm):	Height (cm):
Main amp laser slabs	35.0	35.0
Switch amp laser slabs	34.9	34.7
Booster amp laser slabs	34.8	32.3
Cavity spatial filter lenses	35.2	35.9
Xport spatial filter lenses	34.9	32.3
PC switch KD*P crystal	34.7	33.6
PC Windows	34.7	33.6
Polarizer	34.6	33.3
Cavity mirrors	34.4	32.3
Elbow mirrors	34.5	32.3
Transport mirrors	34.4	32.3
Doubler KDP crystal	34.4	32.3
Tripler KD*P crystal	34.4	32.3
Vacuum windows	34.4	32.3
Final focus lenses	34.4	32.3
Blast shields	34.4	32.3

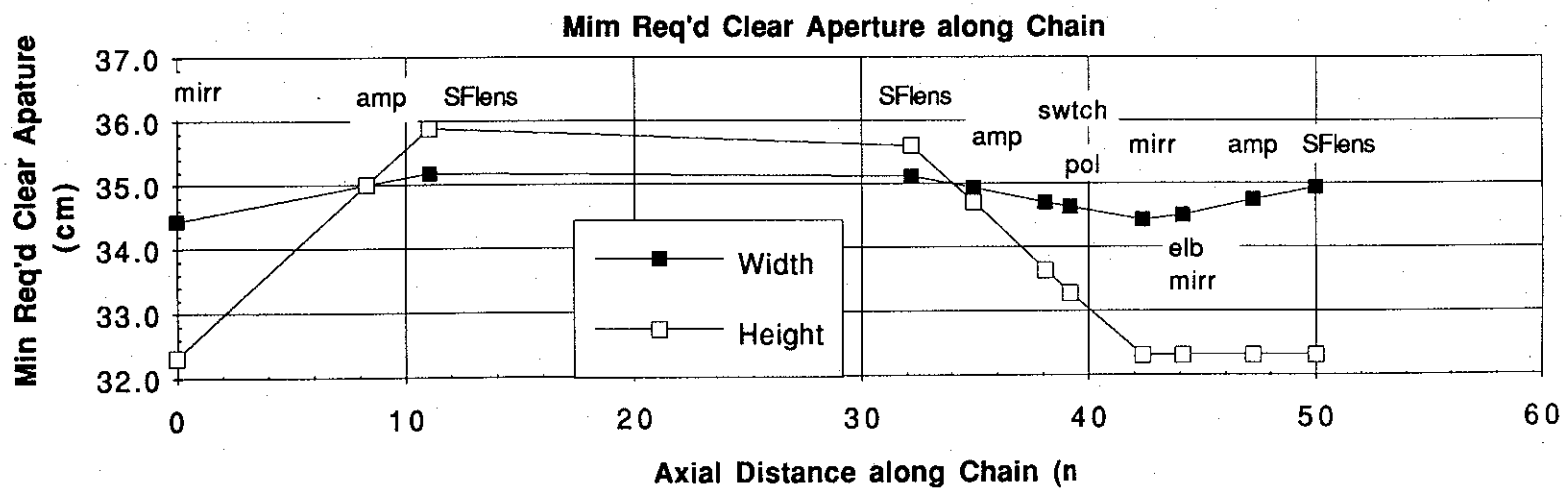

7/2/93 8:07 AM
format rev A

Figure 2: Amplifier directional fiducial

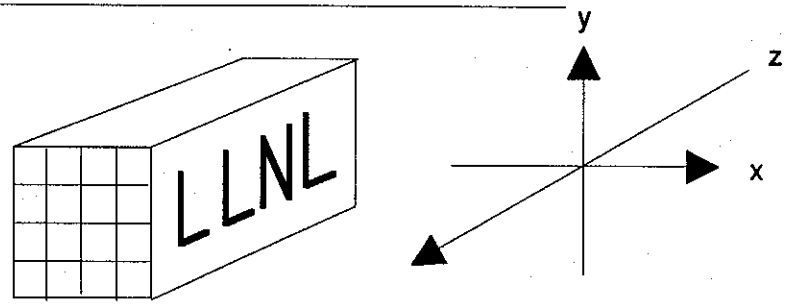

Figure 4: Slab spacing in Z direction

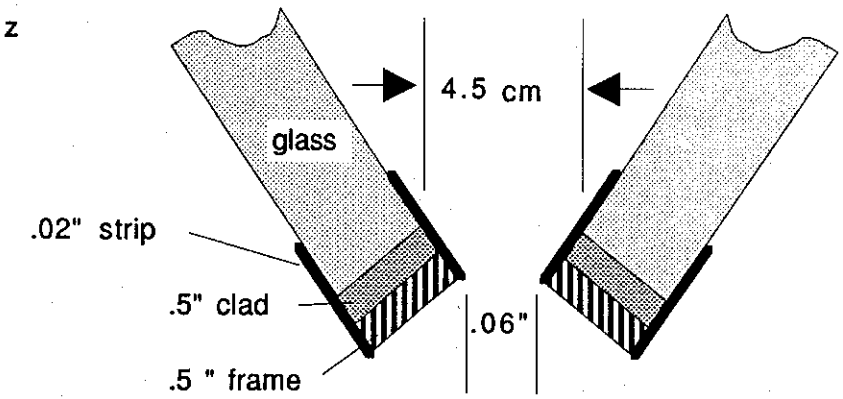

Figure 3: Aperture dimensions viewed parallel to beam

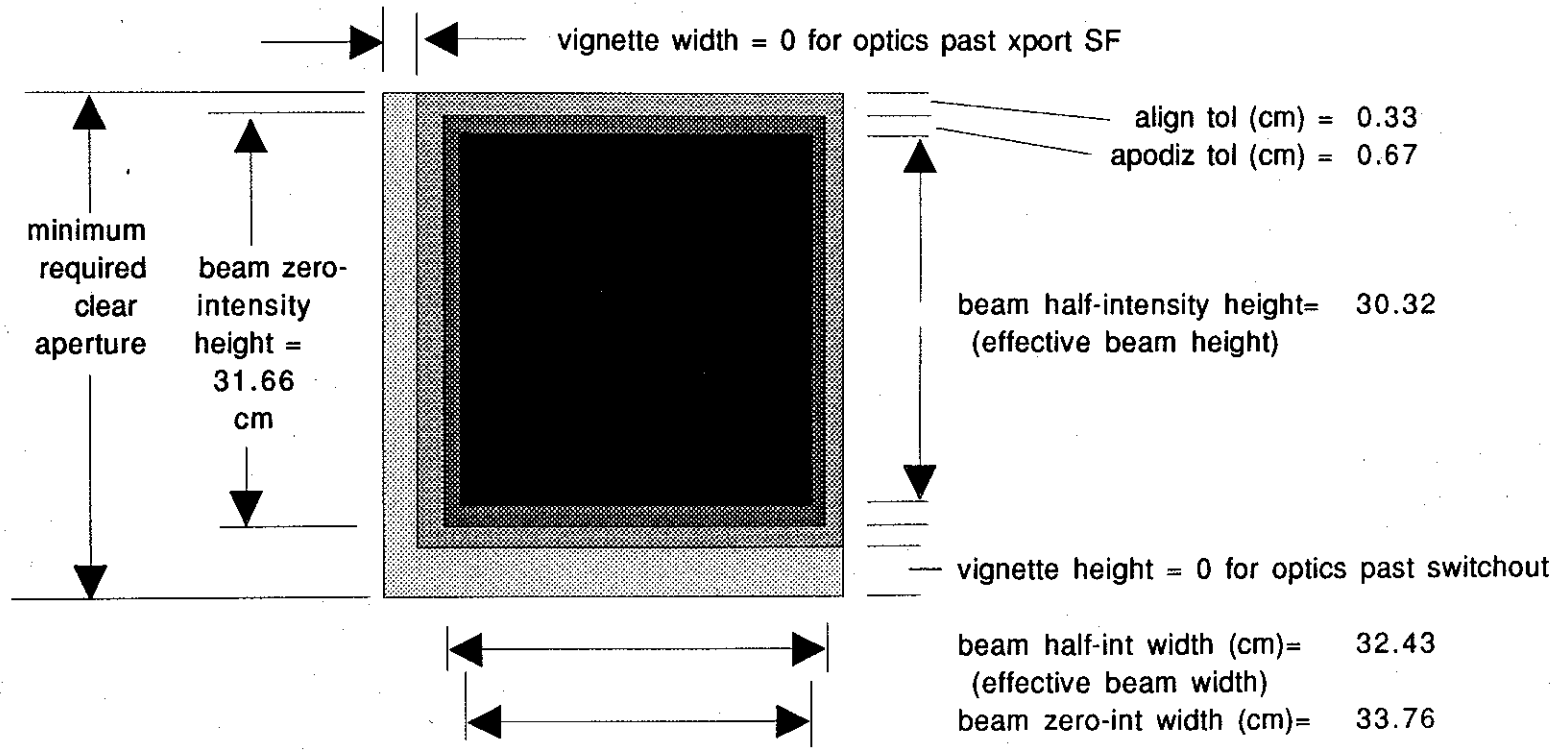

7/2/93 8:07 AM
form rev A

Figure 5: Slab spacing in X and Y directions (cm) for 2x2 amp quadrant

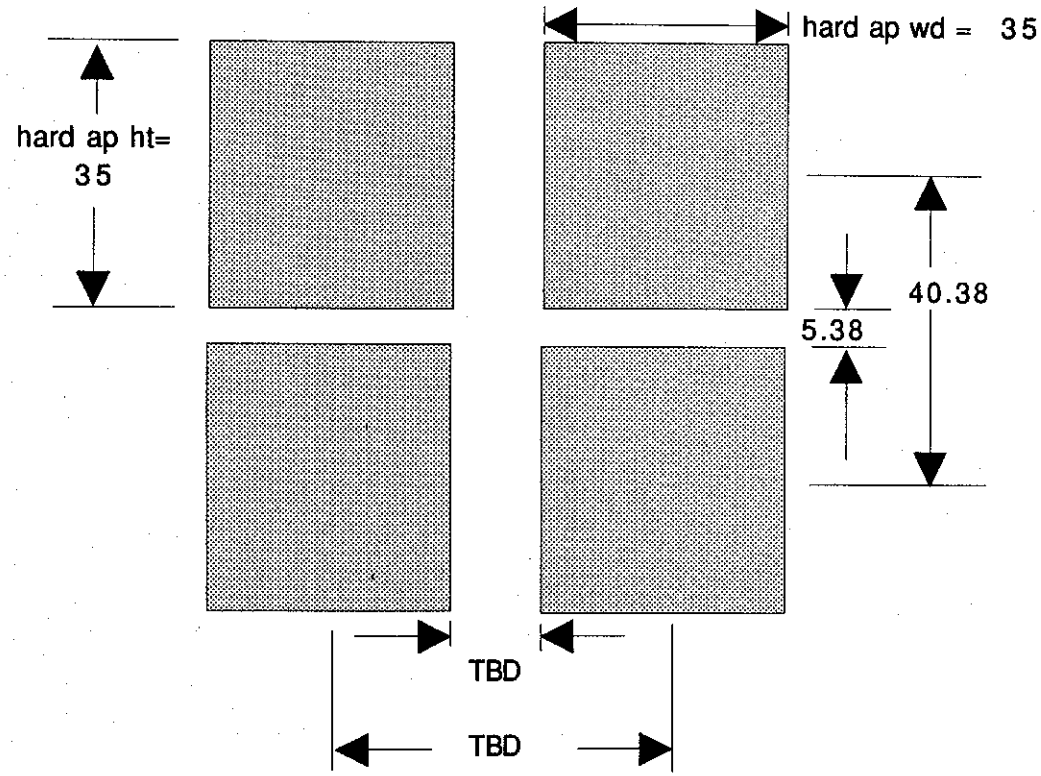

Inputs (mostly from CHAINOP output):

Design ID: case 1B w/ odd-integer slabs (1.8 MJ/500 TW)

Hard aperture width (cm): 35 height (cm): 35

Laser glass slab dimensions (cm):

length:	69.46	flslmp pump	360
width:	38.58	pulse (microsec)	
thickness:	3.38		

Extra width/height for holder (cm):

		Thckns (cm)	Nd3+ doping
Laser glass slabs (phosphate)	0	3.38	5.15E+20
Spatial filter lenses (SiO2)	1.5975	2.6	
Final focus lenses (SiO2)	7	2.9	flshlmp pk fcn
Vacuum windows (SiO2)	2	5.05	0.544
Blast shields (SiO2)	7	1	
Pockels cell windows (SiO2)	2	3	
Polarizer (HiQ BK7)	2	9	Deut fraction
Doubler crystal (KD*P)	1	1.05	0%
Tripler crystal (KD*P)	1	0.85	60%
PC crystal (KD*P)	1	1	60%
Cavity mirrors (BK7)	2	8	
Transport mirrors (BK7)	2	8	
Elbow mirrors (BK7)	2	9	

Number of beamlets:	193.9	Main amp numeric gain:	11.63
Main amp # slabs:	11	Switch amp numeric gain:	1.871
Switch amp # slabs:	3	Boost amp numeric gain:	1.871
Boost amp # slabs:	3	Amps # bmlts high:	4
Polarizer refr indx:	1.507	Amps # bmlts wide:	4
Laser glass density (gm/cc):	2.83	Doubler (KDP) density (gm/cc):	2.35
SiO2 density (gm/cc):	2.2	Tripler (KD*P) density (gm/cc):	2.35
HiQ BK7 density (gm/cc):	2.51	PC (80% deut KD*P) density (gm/cc):	2.35
BK7 density (gm/cc):	2.51		
Explosion fraction:	0.2		

Bank energy (kJ):	837.5
MSA equivalency:	1
Apoization border (cm):	0.668
Beam zero-int width (cm):	33.761
Beam zero-Int height (cm):	31.656
Alignment border (cm):	0.334
Pinhole width (cm):	0.73
Pinhole height (cm):	3.424
Main-side to-mirr dist (m):	8.281
Swtch-sde to-mirr dist (m):	7.406
Spatial filter length (m):	21.187
Slab axial length (cm):	59.87
Num of polarizer lgths:	4
Switch length (m):	0.5
Extra length in cav (m):	5.5
Cav comp and end sp (m):	0.6
Slab xtr lg for holders (cm):	4.5
# slabs in booster amp:	3

	Pump Eff(%):	Energy Dens(J/cc):
Main amp:	4.70%	0.297
Switch amp:	4.40%	0.278
Boost amp:	4.40%	0.278

Injection energy at 1 ns (J):	0
Injection energy at 4.8 ns:	500
Injection energy at 11 ns:	0
Design pulse length (ns):	3.6

Output pow (GW)/eng (kJ):
(fm outpt; use 0.9 xpt and 0.85 knfm below)

1w	3.96E+03	1.43E+04
3w	2.58E+03	9.28E+03

7/2/93 8:07 AM
form rev A

Design #2 for LDB Report
LaserPrint();DamagePrint();RunThruPrint();
Parameters:

Chain injection energy (mJ):	500.0000	
Energy density (J/cc) infinite length:	0.3046	
Slab caliper thickness (cm):	3.3794	
Number of slabs in amp 1:	11.0000	
Number of slabs in amp 2:	3.0000	
Number of slabs in amp 3:	3.0000	
Amp hard aperature width (cm):	35.0000	
Amp hard aperature area (cm^2):	1225.0000	
Laser square-pulse pulsewidth (ns):	3.6000	
Laser size (total volume laser glass) (kl):	29.8538	
Amp # beamlets wide	4.0000	
Amp # beamlets high	4.0000	
Gain cross section (E-20):	3.5000	
Slab single surface transmission:	0.9950	
Slab bulk loss coefficient:	0.0500	
Relative stored energy (MSA is unity):	1.0000	
Explosion fraction in lamps (free air):	0.2000	
Extra length in cavity (m):	5.5000	
Slab extra edge (cm):	0.1000	
Slab extra edge/thickness ratio:	0.5000	
Slab extra length for holders etc. (cm):	4.5000	
Switch length (m):	0.5000	
Cavity component end & spacing (m):	0.6000	
Number of slab-equiv lengths for the polarizer:	4.0000	
Injection mirror area (cm^2):	0.5000	
Beam dump area - both parts (cm^2):	50.0000	
Apodizing fixed per-side margin (cm):	0.5000	
Apodizing multiplier of SQRT(lambda*L):	1.5000	
Alignment fixed per-side margin (cm):	0.2500	
Alignment multiplier of SQRT(lambda*L):	0.7500	
Fluence peak/avg just after pinhole:	1.4000	
Peak/avg multipler of gain term:	0.1000	
Peak/avg multipler of delta-B:	1.0000	
Per beamlet marg (k$/bmlt):	974.0000	
Marg amps cost (k$/(bmlt-slab)):	8.3925	
Marg flashlamps cost ($/(bmlt-slab-cm):	41.2980	
Part of MOR cost ($/(bmlt-ns):	522.0000	
Part of bank ($/J):	0.1292	
Part of bank ($/(bmlt-J^.3-(slab-cm)^.7):	3.2181	
Part of spatial filter cost ($/m):	241.0000	
Laser glass bulk cost ($/cc):	1.6065	(w/o facil/pilot: .98)
Laser glass finish/clad cost ($/cm^2):	1.1852	(w/o facil/pilot: .67)
Fixed cost per beam (M$):	133.3680	
Maximum between-filter B integral:	2.2000	

Slab specs:

thickness	3.38 cm	width	69.46 cm	height	38.58 cm
covered edge	3.58 cm	volume	9.06 liters	pumped	7.79 liters
axial length	59.87 cm	module	64.37 cm	area	2679.57 cm^2/side

Amplifier specs:

	Amp 1	Amp 2	Amp 3		
slab count	11.000	3.000	3.000	total	17.000
pump effiency (%)	4.700	4.400	4.400	inf length amp	4.818
energy density (J/cc)	0.297	0.278	0.278	inf length amp	0.305
gain coefficient (/m)	5.514	5.162	5.162	inf length amp	5.652
numeric gain (pumpd/un)	11.63	1.871	1.871		
unpumped transmission	0.8759	0.9645	0.9645		
stored 1w energy (J)	25473.2	6503.9	6503.9	total	38481.0
bank energy (kJ)	542.0	147.8	147.8	total	837.6

Cavity layout:
total length of cavity (m): 42.374 length of spatial filter (m): 21.187
distance from left-side mirror to farthest slab (m): 8.281
distance from right-side mirror to farthest slab (m): 7.406

Beam geometry - vignette, alignment, apodization:

	--width--	--height-		
pinhole spacing	0.730 cm	3.424 cm		
injection mirror	0.730 cm	0.685 cm	area (cm^2):	0.50
beam dump (2 parts)	7.302 cm	6.847 cm	area (cm^2):	50.00
beam angles	0.138 mrad	0.646 mrad		
beam vig shft (left side)	0.571 cm	2.676 cm		
beam vig shft (right side)	0.511 cm	2.393 cm		
hard metal aperature	35.000 cm	35.000 cm	area (cm^2):	1225.00
beam zero-intensity	33.761 cm	31.656 cm	area (cm^2):	1068.74
beam half-intensity	32.425 cm	30.320 cm	area (cm^2):	983.13

apodization border (all 4 sides) 0.6680 cm (to 1/2 intensity)
alignment border (all 4 sides) 0.3340 cm
fill factor from vignette 0.9085 of area
fill factor from alignment 0.9603 of area
fill factor from apodization 0.9199 of area
total fill factor (half-intensity/hard) 0.8026 of area

CHAINOP9 costs of NIF (proc,design,assembly,pilot,facilit; no develop,conting,taxes,overhead):

Total laser glass volume (laser size) (kl): 29.85

all marg per beamlet only costs; 193.9 beamlets at 974.0 k$ per beamlet	188.89
amp mechanical at 8.392 k$ per beamlet per slab	27.67
flash lamps at 41.3 $ per beamlet per slab per cm slab length	8.15
part of MOR at 522.0 $ per beamlet per ns	0.36
bank energy; 162.43 MJ at 0.12922 $/J	20.99
bank energy at 3.2181 $ per beamlet per (J^0.3-(slab-cm)^0.7)	4.76
spatial filter at 241.0 $/m for two filters of 21.19 m	0.99
bulk laser glass: 29.85 kl at 1.60650 $/cc	47.96
finish/clad laser glass at 1.18520 $/cm^2	20.94
fixed costs for all of above	133.37

Total:	454.08 M$
(w/0 optics facil/pilot:	405.3 M$)

Specs on chain elements:

Item Name	Thick (cm)	Refr Indx	Non Lin Coeff	Angle (deg)	Pasv Xmsn
las glass	3.379	1.519	2.890	56.642	0.988
SF lens	2.600	1.450	2.700	0.000	0.990
focus lens	2.900	1.450	8.100	0.000	0.990
vac window	5.050	1.450	8.100	0.000	0.990
debris shield	1.000	1.450	8.100	55.408	0.980
PC window	3.000	1.450	2.700	0.000	0.990
pol trans	9.000	1.507	2.700	56.433	0.970
pol refl	0.000	0.000	0.000	56.433	0.980
doubler cryst	1.050	1.500	2.900	0.000	0.750
tripler cryst	0.850	1.500	8.100	0.000	1.000
PC crystal	1.000	1.500	2.890	0.000	0.969
mirrors	0.000	0.000	0.000	0.000	0.990

Summary of component fluence damage:

Component	Type	Peak Flunce J/cm^2	Max Allwd J/cm^2	Peak/ max

amp1	laser glass	20.921	36.723	0.570
amp2	laser glass	19.309	36.723	0.526
amp3	laser glass	28.581	36.723	0.778
SFlenses	AR	28.581	36.723	0.778
beam dump	AR	18.734	36.723	0.510
pokl cell wind	AR	19.345	36.723	0.527
wedge	AR	0.000	36.723	0.000
small UT lens	AR	0.000	36.723	0.000
pol in refl	polR	19.883	23.497	0.846
pol in trans	polT	0.355	20.560	0.017
passive rot	polT	0.000	20.560	0.000
cav mirrors	HR	4.490	27.903	0.161
xport mirrors	HR	21.015	27.903	0.753
inj mirror	HR	3.000	27.903	0.108
small UT mirr	HR	0.000	27.903	0.000
large UT mirr	HR	0.000	27.903	0.000
pokl KD*P	KD*P w/ plasma	19.721	37.947	0.520
1st freq conv	KD*P w/ plasma	20.594	37.947	0.543
2nd freq conv	KD*P @ 3w	15.530	17.076	0.909
final foc lens	AR @ 3w	15.713	18.696	0.840
vac window	AR @ 3w	16.367	18.696	0.875
blast shield	AR @ 3w	18.697	18.696	1.000

Run-through of the laser chain:

Item Name	Energy (J)	Power (GW)	Peak (J/cm^2)	Peak/ avg.	Added B Int.	Total B Int.	Energy change	Last Ph gain	Gain ratio
Inject	0.500	0.409	3.00	3.000	.000	.000	1.000	1.0	1.00
SFLens	0.495	0.405	0.712E-03	1.400	.173E-04	.173E-04	0.990	0.99	1.00
Amp3	0.893	0.731	0.127E-02	1.400	.779E-04	.953E-04	1.805	1.8	1.00
PolRefl	0.875	0.716	0.127E-02	1.400	.000	.953E-04	0.980	1.8	1.00
BeamDump	0.175E-01	0.143E-01	0.140E-02	4.000	.000	.953E-04	1.000	1.8	1.00
PoklWind	0.867	0.709	0.125E-02	1.400	.350E-04	.130E-03	0.990	1.7	1.00
PoklKDP	0.840	0.687	0.123E-02	1.400	.122E-04	.143E-03	0.969	1.7	1.00
PoklWind	0.831	0.680	0.120E-02	1.400	.336E-04	.176E-03	0.990	1.7	1.00
Amp2	1.50	1.23	0.214E-02	1.400	.131E-03	.307E-03	1.805	3.0	1.00
SFLens	1.49	1.22	0.214E-02	1.400	.520E-04	.359E-03	0.990	3.0	1.00
Pinhole									
SFLens	1.47	1.20	0.212E-02	1.400	.515E-04	.515E-04	0.990	2.9	1.00
Amp1	15.0	12.2	0.213E-01	1.400	.246E-02	.251E-02	10.180	30.	1.00
Mirror	14.8	12.1	0.213E-01	1.400	.000	.251E-02	0.990	30.	1.00
Amp1	149.	121.	0.213	1.403	.245E-01	.270E-01	10.062	0.29E+03	1.02
SFLens	148.	119.	0.213	1.403	.511E-02	.321E-01	0.990	0.29E+03	1.02
Pinhole									
SFLens	146.	118.	0.210	1.400	.506E-02	.506E-02	0.990	0.29E+03	1.02
Amp2	261.	209.	0.373	1.403	.225E-01	.276E-01	1.788	0.51E+03	1.04
PoklWind	259.	207.	0.373	1.403	.102E-01	.378E-01	0.990	0.51E+03	1.04
PoklKDP	251.	201.	0.369	1.404	.358E-02	.414E-01	0.969	0.49E+03	1.04
PoklWind	248.	199.	0.358	1.404	.983E-02	.512E-01	0.990	0.49E+03	1.04
PolTrans	241.	193.	0.355	1.405	.230E-01	.743E-01	0.970	0.47E+03	1.04
Mirror	238.	191.	0.345	1.408	.000	.743E-01	0.990	0.47E+03	1.04
PolTrans	231.	185.	0.341	1.408	.221E-01	.963E-01	0.970	0.45E+03	1.04
PoklWind	229.	183.	0.332	1.410	.906E-02	.105	0.990	0.45E+03	1.04
PoklKDP	222.	178.	0.329	1.411	.317E-02	.109	0.969	0.43E+03	1.04
PoklWind	220.	176.	0.318	1.411	.870E-02	.117	0.990	0.43E+03	1.04
Amp2	384.	304.	0.553	1.416	.330E-01	.150	1.749	0.74E+03	1.07
SFLens	380.	301.	0.553	1.416	.129E-01	.163	0.990	0.74E+03	1.07
Pinhole									
SFLens	376.	298.	0.541	1.400	.128E-01	.128E-01	0.990	0.73E+03	1.07
Amp1	0.302E+04	0.195E+04	4.49	1.464	.481	.494	8.011	0.48E+04	1.62
Mirror	0.299E+04	0.193E+04	4.49	1.464	.000	.494	0.990	0.47E+04	1.62
Amp1	0.100E+05	0.398E+04	20.9	2.054	1.53	2.02	3.354	0.97E+04	5.17

SFLens	0.991E+04	0.394E+04	20.9	2.054	.169	2.19	0.990	0.96E+04	5.17
Pinhole									
SFLens	0.981E+04	0.390E+04	14.1	1.400	.167	.167	0.990	0.95E+04	5.17
Amp2	0.126E+05	0.421E+04	19.3	1.509	.570	.737	1.282	0.10E+05	8.28
PoklWind	0.125E+05	0.417E+04	19.3	1.509	.206	.943	0.990	0.10E+05	8.28
PoklKDP	0.121E+05	0.404E+04	19.7	1.557	.719E-01	1.01	0.969	0.99E+04	8.28
PoklWind	0.119E+05	0.400E+04	19.3	1.576	.197	1.21	0.990	0.98E+04	8.28
PolRefl	0.117E+05	0.392E+04	19.9	1.636	.000	1.21	0.980	0.96E+04	8.28
BeamDump	234.	78.3	18.7	4.000	.000	1.21	1.000	0.96E+04	8.28
Amp3	0.149E+05	0.413E+04	28.6	1.891	.565	1.78	1.269	0.10E+05	14.2
SFLens	0.147E+05	0.409E+04	28.6	1.891	.175	1.95	0.990	0.10E+05	14.2
Pinhole									
SFLens	0.146E+05	0.404E+04	20.9	1.400	.173	.173	0.990	0.99E+04	14.2
Xport4m	0.143E+05	0.396E+04	21.0	1.419	.000	.173	0.980	0.97E+04	14.2
Triple1	0.107E+05	0.297E+04	20.6	1.419	.634E-01	.237	0.750	0.73E+04	14.2
Triple3	0.107E+05	0.297E+04	15.5	1.427	.124	.361	1.000	0.73E+04	14.2
FocusLens	0.106E+05	0.294E+04	15.7	1.443	.422	.783	0.990	0.72E+04	14.2
VacWindow	0.105E+05	0.291E+04	16.4	1.519	.727	1.51	0.990	0.71E+04	14.2
BlastShld	0.103E+05	0.286E+04	18.7	1.752	.209	1.72	0.980	0.70E+04	14.2
KForm	0.928E+04	0.258E+04	16.5	1.752	.000	1.72	0.903	0.63E+04	14.2
ngFreqCon	0.928E+04	0.258E+04	16.5	1.752	.000	1.72	1.000	0.63E+04	14.2

```
In[46]:
energy;
1.80007e+06
In[47]:
power;
5.0e14
nBeamlets;
193.928
```

Determination of Cost Coefficients for CHAINOP

-W. Williams
x 31945

Point design around which cost scaling with aperture is determined:

Design ID: case 1B w/ odd-integer slabs (1.8 MJ/500 TW)

Apature (cm) width: 35 height: 35 avg: 35
Number of beamlets: 193.90

Component:	Dimensions (cm) Width	Hgt	Thick	NIF # Pcs	NIF Vol (l)	NIF Area (m2)
Laser glass slabs (phosphate)	69.46	38.58	3.38	3296	29857	1766.7
Spatial filter lenses (SiO2)	36.79	37.49	2.60	776	2781	213.9
Final focus lenses (SiO2)	41.43	39.32	2.90	194	916	63.2
Vacuum windows (SiO2)	36.43	34.32	5.05	194	1224	48.5
Debris shields (SiO2)	41.43	63.94	1.00	194	514	102.7
Pockels cell windows (SiO2)	36.71	35.65	3.00	388	1522	101.5
Polarizer (HiQ BK7)	36.64	68.18	9.00	194	4359	96.9
Doubler cryst KDP	35.43	33.32	1.05	194	240	45.8
Tripler cryst KD*P	35.43	33.32	0.85	194	195	45.8
PC crystal KD*P	35.71	34.65	1.00	194	240	48.0
Cavity mirrors (BK7)	36.43	34.32	8.00	388	3879	48.5
Transport mirrors (BK7)	41.86	38.39	8.00	517	6648	83.1
Elbow mirrors (BK7)	36.50	60.46	9.00	194	3852	42.8

Nd3+/ cc: 5.15 e20

		KD*P test	KDP test	label
Deut:	0%	0	1	KDP
	60%	1	0	KD*P
	60%	1	0	KD*P

Total SiO2 vol (kl): 6.96
Total area of flats (m2): 2291
Total area of lenses (m2): 277
Total area of crystals (m2): 140

Optics costs for point design using scalings from J. Atherton 5/3/93 printout:

-- Proprietary information: Do not duplicate --

Cap equip/Facilities + Pilot production + Production (construction)	Bulk		Finish		Coating		Totals	
	NIF (M$)	*bmlt (k$)*	*NIF (M$)*	*bmlt (k$)*	*NIF (M$)*	*bmlt (k$)*	*NIF (M$)*	*bmlt (k$)*
Laser glass slabs (phosphate)*	47.59	245.4	20.81	107.32	0.00	0.00	68.40	352.75
Spatial filter lenses (SiO2)	5.51	28.4	4.88	25.16	0.74	3.80	11.13	57.39
Final focus lenses (SiO2)	1.82	9.4	1.44	7.43	0.21	1.10	3.47	17.90
Vacuum windows (SiO2)	2.43	12.5	0.75	3.87	0.17	0.87	3.35	17.26
Debris shields (SiO2)	1.02	5.2	2.08	10.74	0.33	1.72	3.43	17.70
Pockels cell windows (SiO2)	3.02	15.6	1.57	8.11	0.35	1.82	4.94	25.48
Polarizer (HiQ BK7)	2.18	11.2	1.73	8.93	2.26	11.65	6.17	31.83
Doubler cryst KDP	1.33	6.9	1.59	8.20	0.19	0.99	3.11	16.06
Tripler cryst KD*P	3.72	19.2	1.59	8.20	0.19	0.99	5.50	28.39
PC crystal KD*P	4.59	23.7	1.67	8.60	0.20	1.04	6.46	33.29
Cavity mirrors (BK7)	1.94	10.0	1.04	5.38	1.99	10.28	4.98	25.67
Transport mirrors (BK7)	1.00	5.1	1.79	9.22	3.16	16.29	5.94	30.65
Elbow mirrors (BK7)	0.58	3.0	0.92	4.75	1.59	8.21	3.09	15.94
Totals:	76.71	395.6	41.87	215.93	11.39	58.76	129.97	670.3

Nd3+/ cc: 5.15 e20
(Ahterton cost validity range: 2 - 5e20)

Deut: 0%
60%
60%
(Atherton cost validity range: 60-80%)

Total marg optics cost for NIF (M$): 129.97 w/o facil,pilot: 81.75
Total marg cost per beamlet (k$): 670.3 w/o facil,pilot: 421.6
Full cost (k$): 140772 (optics only; includes facil+pilot+prod+fixed costs, but not devel (see below))
Full cost (k$): 92554 (optics only; includes prod+fixed costs, but not devel,facil,pilot)
* finish cost includes edge cladding

Cap equip/Facilities	Bulk		Finish		Coating	
	NIF (M$)	bmlt (k$)	NIF (M$)	bmlt (k$)	NIF (M$)	bmlt (k$)
Laser glass slabs (phosphate)	12.31	63.49	6.31	32.52	0	0
Spatial filter lenses (SiO2)	1.69	8.70	1.72	8.85	0.132	0.68
Final focus lenses (SiO2)	0.56	2.86	0.51	2.62	0.039	0.20
Vacuum windows (SiO2)	0.74	3.83	0.36	1.85	0.030	0.15
Debris shields (SiO2)	0.31	1.61	1.00	5.14	0.063	0.33
Pockels cell windows (SiO2)	0.92	4.76	0.75	3.86	0.063	0.32
Polarizer (HiQ BK7)	0	0	0.83	4.30	0.452	2.33
Doubler cryst KDP	0.17	0.87	0.63	3.22	0.028	0.15
Tripler cryst KD*P	0.20	1.05	0.63	3.22	0.028	0.15
PC crystal KD*P	0.25	1.29	0.66	3.38	0.030	0.15
Cavity mirrors (BK7)	0	0	0.35	1.81	0.452	2.33
Transport mirrors (BK7)	0	0	0.60	3.10	0.775	4.00
Elbow mirrors (BK7)	0	0	0.31	1.59	0.399	2.06
Totals:	17.15	88.45	14.63	75.47	2.49	12.85

Pilot Production	Bulk		Finish		Coating	
	NIF (M$)	bmlt (k$)	NIF (M$)	bmlt (k$)	NIF (M$)	bmlt (k$)
Laser glass slabs (phosphate)	5.971	30.796	2.650	13.667	0	0
Spatial filter lenses (SiO2)	0.901	4.647	0.321	1.655	0.093	0.480
Final focus lenses (SiO2)	0.297	1.531	0.095	0.489	0.023	0.120
Vacuum windows (SiO2)	0.397	2.046	0.073	0.375	0.023	0.120
Debris shields (SiO2)	0.166	0.858	0.154	0.795	0.023	0.120
Pockels cell windows (SiO2)	0.493	2.544	0.152	0.785	0.047	0.240
Polarizer (HiQ BK7)	0	0	0.145	0.749	0.310	1.600
Doubler cryst KDP	0	0	0.137	0.708	0.023	0.120
Tripler cryst KD*P	0	0	0.137	0.708	0.023	0.120
PC crystal KD*P	0	0	0.144	0.742	0.023	0.120
Cavity mirrors (BK7)	0	0	0.073	0.375	0.252	1.300
Transport mirrors (BK7)	0	0	0.125	0.643	0.414	2.134
Elbow mirrors (BK7)	0	0	0.064	0.331	0.194	1.000
Totals:	8.23	42.42	4.27	22.02	1.45	7.47

Production (Construction)	Bulk		Finish		Coating	
	NIF (M$)	bmlt (k$)	NIF (M$)	bmlt (k$)	NIF (M$)	bmlt (k$)
Laser glass slabs (phosphate)	29.308	151.15	11.85	61.13	0	0
Spatial filter lenses (SiO2)	2.924	15.08	2.84	14.65	0.512	2.64
Final focus lenses (SiO2)	0.9632	4.97	0.84	4.33	0.151	0.78
Vacuum windows (SiO2)	1.2874	6.64	0.32	1.65	0.116	0.60
Debris shields (SiO2)	0.54	2.79	0.93	4.81	0.246	1.27
Pockels cell windows (SiO2)	1.6008	8.26	0.67	3.46	0.243	1.25
Polarizer (HiQ BK7)	2.1796	11.24	0.75	3.88	1.4979	7.73
Doubler cryst KDP	1.1621	5.99	0.8282	4.27	0.141	0.73
Tripler cryst KD*P	3.5179	18.14	0.8282	4.27	0.141	0.73
PC crystal KD*P	4.3374	22.37	0.8679	4.48	0.148	0.76
Cavity mirrors (BK7)	1.9396	10.00	0.62	3.20	1.2898	6.65
Transport mirrors (BK7)	0.9971	5.14	1.06	5.48	1.9702	10.16
Elbow mirrors (BK7)	0.5778	2.98	0.55	2.82	0.9983	5.15
Totals:	51.33	264.75	22.96	118.44	7.45	38.44

-- Proprietary information: Do not duplicate --

Scaling Equations for CHAINOP costing:

The scaling equations from WBS items, as used in CHAINP, are broken into 9 categories:

1) fixed costs for facility, or fixed with a scaling with number of beamlets
   Most WBS items fall into this category. They are summarized in the table below.
2) flashlamps, which scale with number of beamlets. number of slabs per beamlet, and slab axial length. CHAINOP inputs of amp number beamlets high and wide and lamp packing fraction (as calculated by K. Jancaitis) are also required.
3) amplifier segments, which scale with number of beamlets and number of slabs per beamlet. CHAINOP input of amp number of beamlets high and wide are also required.
4) front end, which scales with number of beamlets and laser pulse length.
5) power conditioning system, which scales with bank energy, pumping pulse length, and energy per flashlamp.
6) spatial filters, which scale with SFlength (trivial ap scaling)
7) laser glass bulk, which scales with slab volume ($/cc)
8) laser glass finish, which scales with slab surface area ($/cm2)
9) all other optics, which scales with number of beamlets

1) Facility fixed costs, or fixed with scaling with number of beamlets.

	Procurement		Design		Assembly		
		Marg		Marg		Marg	
WBS Item	Fixed (k$)	(*Nb) (k$)	Fixed (k$)	(*Nb) (k$)	Fixed (k$)	(*Nb) (k$)	Comments
1. Project Office	13564		2000				
2. Conventional Facilities	16300				1737		assumes 60 ft extension on blg 391
3. Laser							
3.1 Front End							-- see (4) below --
3.2 Main Amp System							
3.2.1 Main Amps							
3.2.1.1 Flashlamp Assemblies							-- see (2) below --

3.2.1.3, 3.2.1.5-7 (amp mech)						-- see (3) below --
3.2.1.4 Cooling and Purge Sys						?? not yet determined
3.2.2 Spatial Filters						-- see (6) below --
3.2.3 Mirror Mounts		16.2	55.1	7.3	1.64	
3.2.4 Polarizer Assembly	216.4	7.69	310.5		4.333	
3.2.5 Pockels' Cell Assembly	725.3	83.185	2195.3	482.9	16.337	
3.2.6 Boost Amp						
3.2.6.1 Flashlamp Assemblies						-- see (2) below --
3.2.6.3, 3.2.6.5-7 (amp mech)						-- see (3) below --
3.2.6.4 Cooling and Purge Sys						?? not yet determined
3.2.7 Interstage Hdw		3.9	14.6	2.9	0.096	
3.3 Beam Xport System						
3.3.1 Spatial Filters						-- see (6) below --
3.3.2 Mirror Assembly		13.7	53.8	7.3	1.45	
3.3.3 Final Optics System		20.4	135.1	17.4	2.06	
3.3.4 Beam Tube System		7.92	29.9	5.8	0.119	
3.3.5 Interstage Hdw						-- no identifiable items here
3.4 Power Cond System						-- see (5) below --
3.5 Align and Laser Diag	657	114	7475	130	79	
3.6 Space Frame						-- see (10) below --
3.7 Laser Aux Systsems	725			1873		?? needs scaling
4. Target Area						
4.1 Chamber and Containment						
4.1.1 Walls	9477	2.63	300	6000		
4.1.2 n/gamma shield	1750		150	350		
4.1.3 Chamber Port System	65		0	0		
4.1.4 Chamber Vacuum System	1400		0	0		?? begin rechecked by Patton
4.1.5 EMI Mitigation System	200					total cost
4.1.6 Chmbr Therml Contl Sys						-- no thermal control system
4.2 Final Optics Protection						
4.2.1 Debris Shield Holders		3.25	0	0		
4.2.2 Other Protection Sys	45	7	75	550		
4.3 Target Positioning						
4.3.1 Inserter/Positioner	1350		300	1020		
4.3.2 Target Align Support Hdw	250		75	0		
4.3.3 Target Thrml Contr Hdw	450		40	0		

CHAINOPCostCoeffs

4.4 Target Diags	9000						total cost
4.5 Target Spaceframe	1000		1680		0		
4.6 Environ Protection System	500		150		85		
4.7 Target Area Aux Systems	2100		300		1400		
5. Intgrtd Comp Contl System	2129	16.71	3560		806	3	
totals:	61904	297	18899	0	14475	108	

total fixed (k$):	95278
total per beam (k$):	405

2) Flash lamps cost

procurement (k$):

*(400 + 2.3 Llamp)*Nlamps*.001*

where N_{lamps} = # lamps in NIF

$$= \left(N_{slabsA1} + N_{slabsA2} + N_{slabsA3}\right)\left(\frac{L_{slabaxial} F_{pack}}{2.5\ \text{cm}}\right)\left(\frac{N_B}{H_{amp} W_{amp}}\right)\left(W_{amp}\right)$$

Llmp = Hamp Hap + (Hamp - 1)Sspace = lamp length (cm)
Hap = hard aperture height (cm)
Hamp = amplifier # beamlets high (e.g. 4) (input to CHAINOP)
Wamp = amplifier # beamlet wide (e.g. 4) (input to CHAINOP)
Sspace = vertical hard ap to hard ap spacing (cm) (from Summary)
Lslabaxial = axial length of a slab (cm) (e.g. 60) (from CHAINOP)
Fpack = packing fraction of lamps (e.g. 0.544) (from Jancitis/CHAINOP)
(based on 2.5 cm ID lamps and
side cassettes having 1/2 packing fraction of central cassettes)

design (k$): 0

assembly (k$ 0 (incl in amp segments)

3) Amplifier segments cost (per beamlet for assemb; fixed for proc, design)

procurement (k$):

Ch(NslabsA1 + NslabsA2 + NslabsA3)* Nb + 882*

where

$$Ch = 8.55 + \frac{30.88}{e^{H_{amp}}} - 0.51 H_{amp} + \frac{7.77 - 1.38 H_{amp} + 0.13 H_{amp}^2}{e^{0.8 W_{amp}}} + \left(0.0001 - 0.016 H_{amp} + 0.007 H_{amp}^2 - 0.0012 H_{amp}^3 + 0.000068 H_{amp}^4\right) W_{amp}$$

(note: the $882 k fixed cost is for all amps and flashlamps, but is included here)

design cost (k$): 2370

assembly cost (k$): (0.770 /Hamp^0.7 + 0.461 / (Hamp^0.7Wamp) +
1.953 /Hamp^0.6)(NslabsA1 + NslabsA2 + NslabsA3)
(includes BAU and flash lamp cassette;
variables defined in (2) above)

4) Front end costs (k$):

regen/preamp (for one regen/preamp per beamlet):

procurement: 72.5Nb + 61 for 0 < Einj < 0.5 J
97.5Nb + 61 for 0.5 < Einj < 3 J
102.3Nb + 61 for 3 < Einj < 10 J

design: 3328

assembly: 20.87Nb

MOR:

procurement: (19.73 + 0.458taueq)Nb + 701

design: 940.90

assembly: (4.52 + 0.064taueq)Nb + 87.7

1.4185

5) Power Conditioning costs (k$):

procurement:

$$0.001\left(7.21e6 + \frac{E_{bank}}{0.85}\left(0.104 + 0.005\left(\frac{500 - S_p(\mu s)}{120}\right)\right) + 0.027 E_{bank}\left(\frac{E_{lamp}}{E_{lamp0}}\right)^{-0.7}\right)$$

where Sp is the flashlamp pump pulse duration, Elamp is (Ebank/Nlamps), and Elamp0 = 17 kJ/lamp
This is broken into three parts: one fixed and two marginal with different scalings (see below)

design: 0 (incl in procurment fixed cost)

assembly: 0 (incl in procurement)

6) Spatial filter (cavity and transport) costs (k$):

procurement (k$): 914 + 92.33*Nb*(.94 + .06(SFLength/23 m))
= 914 + 86.79*Nb + 0.241*Nb*SFLength
design (k$): 1374
assembly (k$): 21.483*Nb

7) Laser glass bulk cost ($/cc), including production, pilot, and facilitization	1.4185
8) Laser glass finishing/cladding cost ($/cm2), including production, pilot, and facilitization	1.0886
9) Cost of all optics besides laser glass (k$/beamlet), including production, pilot, and facili	293.54
Fixed facility costs associated with optics (k$) (design and misc proc)	10800
Development (pre-production) costs at vendor (not TPC dollars ?) (k$):	26550
Development (pre-production) costs at LLNL (not TPC dollars ?) (k$):	25900

10) Space Frame costs for laser (k$) (put under fixed costs):

proc (k$): 8000*(Vlasglass / 30.6 kl)^0.6
design (k$): 1680

Total cost: production,pilot,facilitization; not devel,overhead,taxes,conting

Total cost as reported in this CHAINOP run (M$): 454.08

--- this should be approximately equal to ---

This CHAINOP run is used to determine new cost coefficients below.
Total cost as detemined by these coefficients (M$): 453.50

--- and this should be approximately equal to ---

Total cost as determined from detailed cost eqns (M$): 453.50

Ditto w/o optics facil,pilot: 405.28

These detailed costs are racked up as follows:

WBS Item	Proc (k$)	Design (k$)	Assem (k$)	Total (k$)
1. Project Office	13564	2000	0	15564
2. Conventional Facilities	16300	0	1737	18037
3. Laser				
3.1 Front End	23813	4268.9	5055.5	33137
3.2 Main Amp System				79785
3.2.1 Main Amps				32746
3.2.1.1 Flashlamp Assemblies	6711.9	0	0	6711.9
3.2.1.3, 3.2.1.5-7 (amp mech)	20446	2370	3218.3	26034
3.2.1.4 Cooling and Purge Sys	???	???	???	
3.2.2 Spatial Filters	8689.6	275	1881.4	10846
3.2.3 Mirror Mounts	3141.2	55.1	325.3	3521.6
3.2.4 Polarizer Assembly	1707.5	310.5	840.17	2858.2
3.2.5 Pockels' Cell Assembly	16855	2195.3	3650.6	22701
3.2.6 Boost Amp				6320.2
3.2.6.1 Flashlamp Assemblies	1438.3	0	0	1438.3
3.2.6.3, 3.2.6.5-7 (amp mech)	4192.3	0	689.63	4881.9
3.2.6.4 Cooling and Purge Sys	???	???	???	
3.2.7 Interstage Hdw	756.21	14.6	21.514	792.32
3.3 Beam Xport System				22527
3.3.1 Spatial Filters	10043	1099	2284.1	13426
3.3.2 Mirror Assembly	2656.4	53.8	288.46	2998.7
3.3.3 Final Optics System	3955.6	135.1	416.83	4507.5
3.3.4 Beam Tube System	1535.7	29.9	28.874	1594.5
3.3.5 Interstage Hdw	0	0	0	0

Total (M$): 453.50

WBS Item	Proc (k$)	Design (k$)	Assem (k$)	Total (k$)
3.4 Power Cond System	32952	0	0	32952
3.5 Align and Laser Diag	22762	7475	15448	45685
3.6 Space Frame	7882.8	1680	0	9562.8
3.7 Laser Aux Systsems	725	0	1873	2598
4. Target Area				42559
4.1 Chamber and Containment				20202
4.1.1 Walls	9987	300	6000	16287
4.1.2 n/gamma shield	1750	150	350	2250
4.1.3 Chamber Port System	65	0	0	65
4.1.4 Chamber Vacuum System	1400	0	0	1400
4.1.5 EMI Mitigation System	200	0	0	200
4.1.6 Chmbr Therml Contl Sys	0	0	0	0
4.2 Final Optics Protection				2657.5
4.2.1 Debris Shield Holders	630.18	0	0	630.18
4.2.2 Other Protection Sys	1402.3	75	550	2027.3
4.3 Target Positioning				3485
4.3.1 Inserter/Positioner	1350	300	1020	2670
4.3.2 Target Align Support Hdw	250	75	0	325
4.3.3 Target Thrml Contr Hdw	450	40	0	490
4.4 Target Diags	9000	0	0	9000
4.5 Target Spaceframe	1000	1680	0	2680
4.6 Environ Protection System	500	150	85	735
4.7 Target Area Aux Systems	2100	300	1400	3800
5. Intgrtd Comp Contl System	5369.1	3560	1387.7	10317
6. Optics (incl proc,pilot,facil; no devel)			140772	

The above costs result in the following coefficients for CHAINOP (which should be very similar to those used in the optimizatior the case should be re-run with these) (all costs in k$):

		current design resulting costs (M$):
133509	1) fixed costs:	133.51
	2) marginal per beamlet (most items):	188.68
948	for 0 < Einj < 0.5 J	
973	for 0.5 < Einj < 3 J	
978	for 3 < Einj < 10 J	
8.39245892	3) marginal per beamlet per slab (amps):	27.66
0.04129804	4) marginal per beamlet per slab per cm (flashlamps):	8.15
0.522	5) marginal per beamlet per ns (MOR):	0.36
0.00012922	6) marginal per beamlet per J (power cond):	20.98
0.00321808	7) marginal per beamlet per J^0.3 per slab^0.7 per cm^0.7 (power cond):	4.76
0.241	8) marginal per beamlet per m (spatial filter):	0.99
1.59406307	9) marginal per cc (laser glass bulk):	47.59
0.00117793	10) marginal per cm2 (laser glass finish/clad):	20.81
	total:	453.50

data for pie chart

15.6	15.6	1. Project Office
18.0	18.0	2. Conventional Facilities
33.1	33.1	3.1 Front End
79.8	79.8	3.2 Main Amp System
22.5	22.5	3.3 Beam Xport System
33.0	33.0	3.4 Power Cond System
45.7	45.7	3.5 Align and Laser Diag
12.2	12.2	3.6/3.7 Space Frame/Aux Sys
42.6	42.6	4. Target Area
10.3	10.3	5. Intgrtd Comp Contl System
140.8	140.8	6. Optics
	453.5 *Total (M$)*	

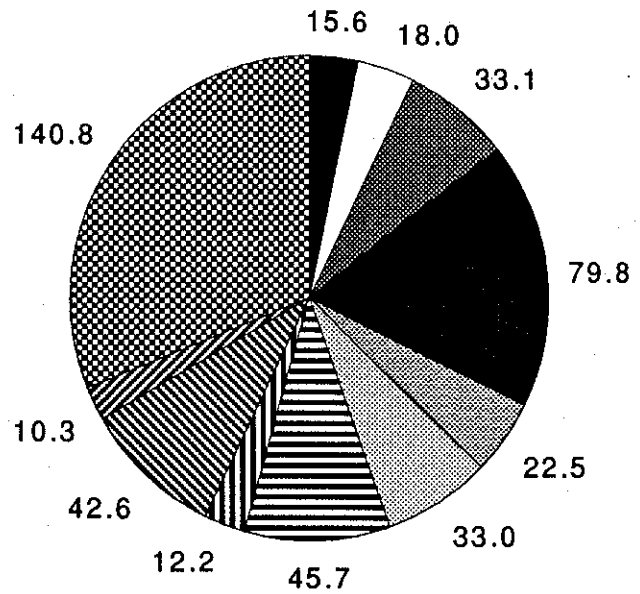

NIF Configuration Summary
Design 3

NIF Configuration Summary

Engineering Design Information from CHAINOP for Laser Design Basis Study

- W. Williams
x31945

Design summary for: ***Design #3 for LDB report (1.8 MJ/500 TW)***

- 289.8 beamlets
- 18 beamlines
- 4 x 4 amps
- slab layout: 9 5 3
- 35 cm hard aperture
- laser slab thickness (cm): 3.66
- free-air expl fctn (%): 20

- contrast ratio of 3w pulse: 50:1
- design pulse length (ns): 4.80
- design inj energy (J): 0.5
- chain output:

	power (GW)	energy (kJ)
1w @ freq conv	3390.0	16.30
3w @ LEH(abv*.85*.86*X)	1742.7	6.22
(freq conv eff X (power):	0.7	
(freq conv eff X (energy):	0.52)	

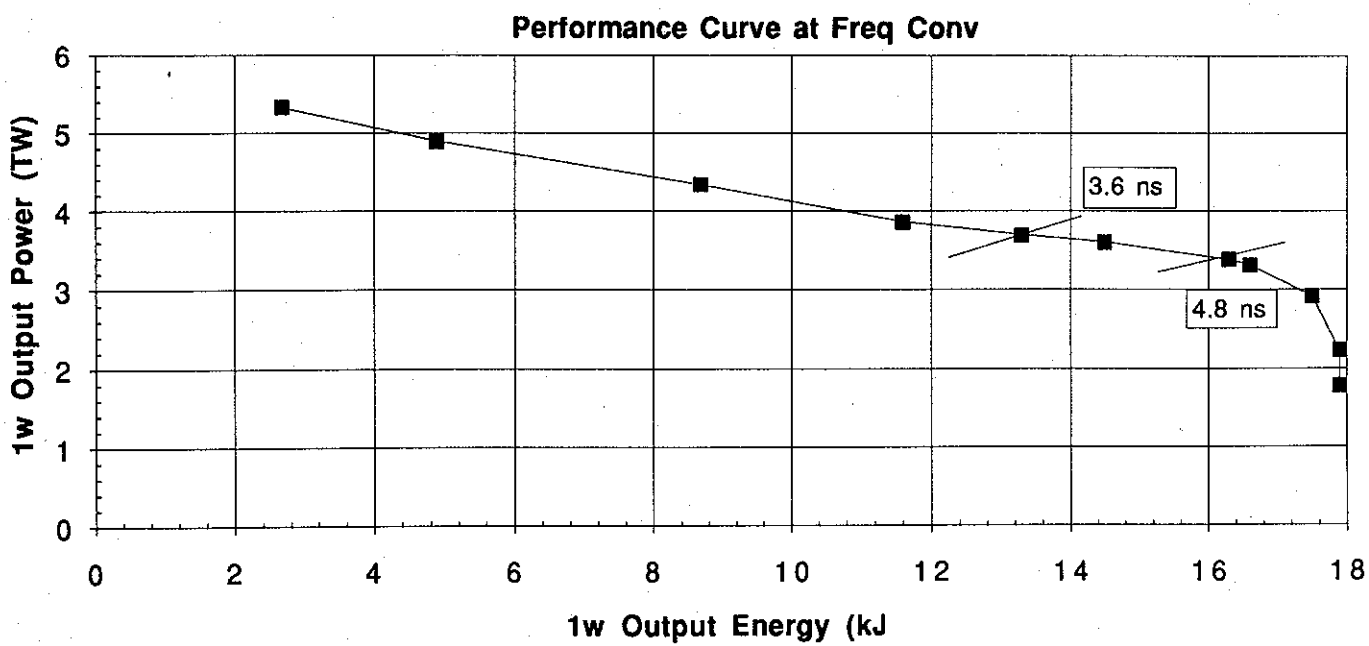

7/2/93 12:05 PM
format rev A

Figure 1: Baseline layout dimensions from CHAINOP (drawing not to scale; dimensions in m)

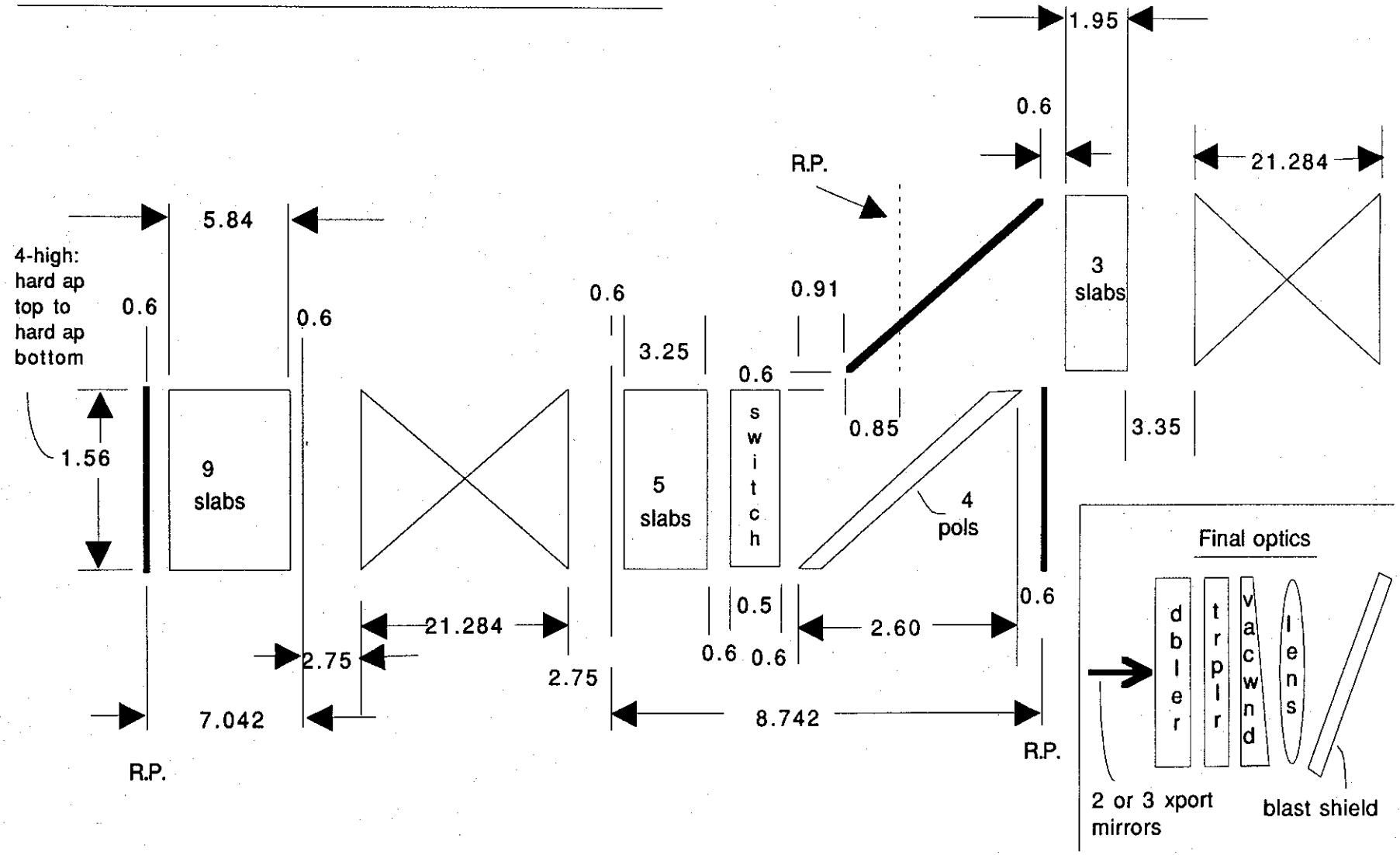

7/2/93 9:01 AM
form rev A

Design information by WBS element:

3.1 Front End

Injection energy (J):	0.0193 at 1 ns
(nominal gain/loss)	0.5 at 4.8 ns
	2.15 at 12 ns

3.2 Main Amplification System (see Figures 1-4)

MSA equivalency:	1	
Amplifier numeric gain (pumped/unpumped ratio):		
main amp:	8.09	
switch amp:	3.107	
boost amp:	1.927	
Cavity spatial filter length (m):	21.284	
Axial ghost focus standoff (amp end to lens)(m):	3.35	
Cavity component end spacing (m):	0.6	
Polarizer axial (z) length (m):	2.60	
Switch axial (z) length (m):	0.5	
Center point to center point laser slab spacing (cm):		
in x (per N. Frank) (see Fig 5):	TBD	
in y (per N. Frank) (see Fig 5):	40.38	
in z (per CHAINOP input):	64.91	
Hard ap edge to hard ap edge laser slab spacing (cm):		
in x (per N. Frank) (see Fig 5):	TBD	
in y (per N. Frank) (see Fig 5):	5.38	
in z (per CHAINOP input) (see Fig 4):	4.5	
Minimum clear aperture size (cm) (width/height):		
at main amp:	34.9	34.5
at switch amp:	35.0	35.0
at SF lens:	35.2	35.9

at cavity mirrors:	34.4	32.2	
PC switch:	34.7	33.5	
Polarizer	34.6	33.2	
Extra width/height on optics for holders (cm):			
Phosphate laser glass in all amps:	0		
SiO2 cavity SF lens:	1.5975		
BK7 cavity mirrors:	2		
KD*P PC switch:	1		
SiO2 PC switch windows:	2		
HiQ BK7 polarizer:	2		
Optical material sizes (cm) (width/height/thickness):			
Phosphate laser glass in all amps:	69.9	38.9	3.7
SiO2 cavity SF lens:	36.8	37.5	2.6
BK7 cavity mirrors:	36.4	34.2	8.0
KD*P PC switch:	35.7	34.5	1.0
SiO2 PC switch windows:	36.7	35.5	3.0
HiQ BK7 polarizer:	36.6	67.9	9.0

3.3 Beam Transport System

Transport spatial filter length (m): (CHAINOP assumes this to be the same as the cavity SF length. The actual difference will have some impact on pinhole width)	21.284
Axial ghost focus standoff (amp end to lens) (m): (assumed to be the same as the cavity standoff for beam size calcs and Figure 1)	3.35

3.4 Power Conditioning

Pump efficiency (%):	
in main amp:	0.04789
in switch amp:	0.04674
in boost amp:	0.04508

Pumping energy density (J/cc):	
in main amp:	0.286
in switch amp:	0.279
in boost amp:	0.269
Required bank energy per chain (kJ) (no margain):	858.3

6.0 Optical Materials:

Component:	Dimensions (cm) Width	Height	Thickness	Piece Vol. (liters)	Piece Wt (kg)	Piece Finised Area (cm2)	Notes
Laser glass slabs (phosphate)	69.9	38.9	3.7	9.94	28.14	5434	5.15E+20
Spatial filter lenses (SiO2)	36.8	37.5	2.6	3.58	7.89	2758	Nd3+/cc
Final focus lenses (SiO2)	41.4	39.2	2.9	4.71	10.35	3245	
Vacuum windows (SiO2)	36.4	34.2	5.1	6.29	13.83	2489	
Blast shields (SiO2)	41.4	63.7	1.0	2.64	5.80	5275	
Pockels cell windows (SiO2)	36.7	35.5	3.0	3.91	8.60	2605	
Polarizer (HiQ BK7)	36.6	67.9	9.0	22.39	56.19	4975	Deut frac:
Doubler crystal (KD*P)	35.4	33.2	1.1	1.23	2.90	2350	0%
Tripler crystal (KD*P)	35.4	33.2	0.9	1.00	2.35	2350	60%
PC crystal (KD*P)	35.7	34.5	1.0	1.23	2.89	2463	60%
Cavity mirrors (BK7)	36.4	34.2	8.0	9.96	24.99	1245	
Transport mirrors (BK7) *	41.8	38.3	8.0	12.80	32.12	1600	
Elbow mirrors (BK7)	36.5	60.2	9.0	19.77	49.62	2197	

*effective dimensions

Component:	NIF # Pieces	Tot NIF Vol (liters)	Tot NIF Area (m2)
Laser glass slabs (phosphate)	4926.6	48993	2677.2
Spatial filter lenses (SiO2)	1159.2	4156	319.7
Final focus lenses (SiO2)	289.8	1364	94.0
Vacuum windows (SiO2)	289.8	1821	72.1
Blast shields (SiO2)	289.8	764	152.9
Pockels cell windows (SiO2)	579.6	2265	151.0
Polarizer (HiQ BK7)	289.8	6487	144.2
Doubler crystal (KD*P)	289.8	358	68.1
Tripler crystal (KD*P)	289.8	289	68.1
PC crystal (KD*P)	289.8	357	71.4
Cavity mirrors (BK7)	579.6	5771	72.1
Transport mirrors (BK7)	773	9889	123.6
Elbow mirrors (BK7)	289.8	5729	63.7

Summary:	
Total laser glass vol (kl):	48.99
Total SiO2 vol (kl):	10.37
Total std/HiQ BK7 vol (kl):	27.88
Total KD*P/KDP vol (kl):	1.00
Total optical matls vol (kl):	88.24
Total las glass area (m2):	2677.2
Total SiO2 area (m2):	789.7
Total std/HiQ BK7 area (m2):	403.6
Total KD*P/KDP area (m2):	207.6
Total optical matls area (m2):	4078.1

Minimum required clear aperture (these values dictate piece sizes):

Component:	Width (cm):	Height (cm):
Main amp laser slabs	34.9	34.5
Switch amp laser slabs	35.0	35.0
Booster amp laser slabs	34.7	32.2
Cavity spatial filter lenses	35.2	35.9
Xport spatial filter lenses	34.9	32.2
PC switch KD*P crystal	34.7	33.5
PC Windows	34.7	33.5
Polarizer	34.6	33.2
Cavity mirrors	34.4	32.2
Elbow mirrors	34.5	32.2
Transport mirrors	34.4	32.2
Doubler KDP crystal	34.4	32.2
Tripler KD*P crystal	34.4	32.2
Vacuum windows	34.4	32.2
Final focus lenses	34.4	32.2
Blast shields	34.4	32.2

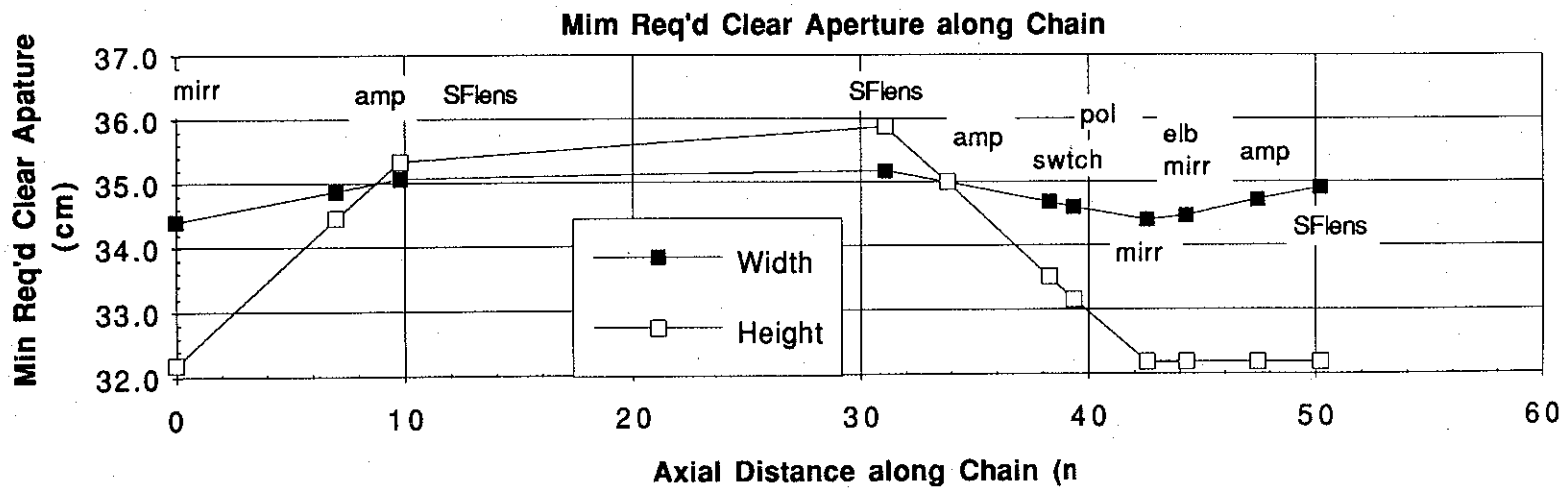

7/2/93 9:58 AM
format rev A

Figure 2: Amplifier directional fiducial

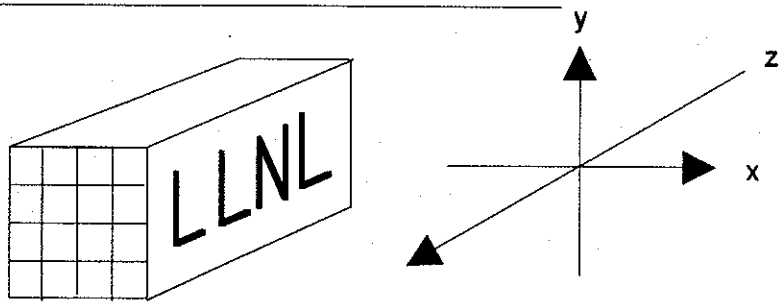

Figure 4: Slab spacing in Z direction

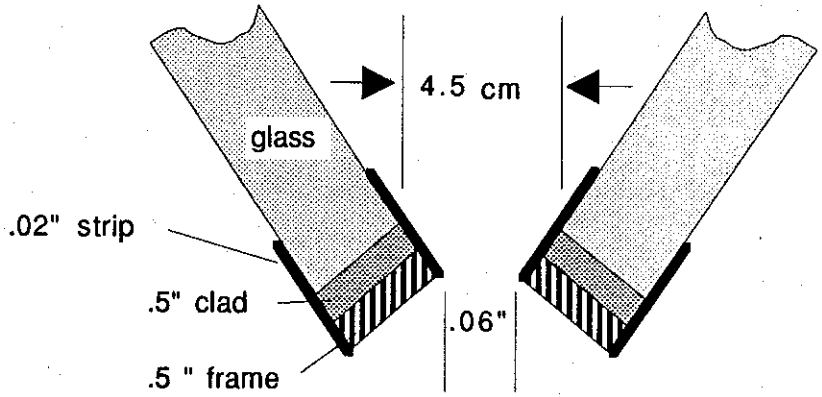

Figure 3: Aperture dimensions viewed parallel to beam

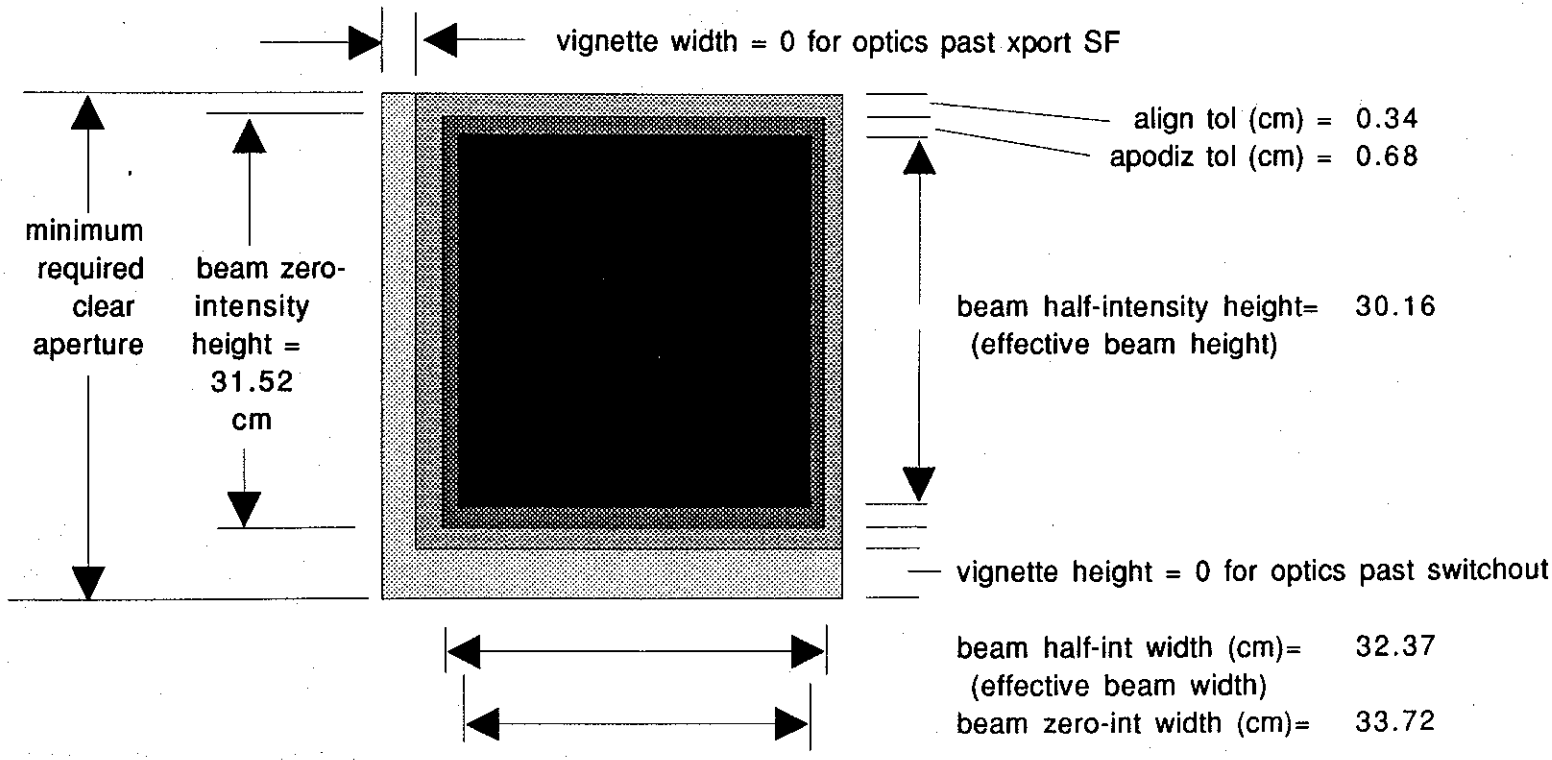

Figure 5: Slab spacing in X and Y directions (cm) for 2x2 amp quadrant

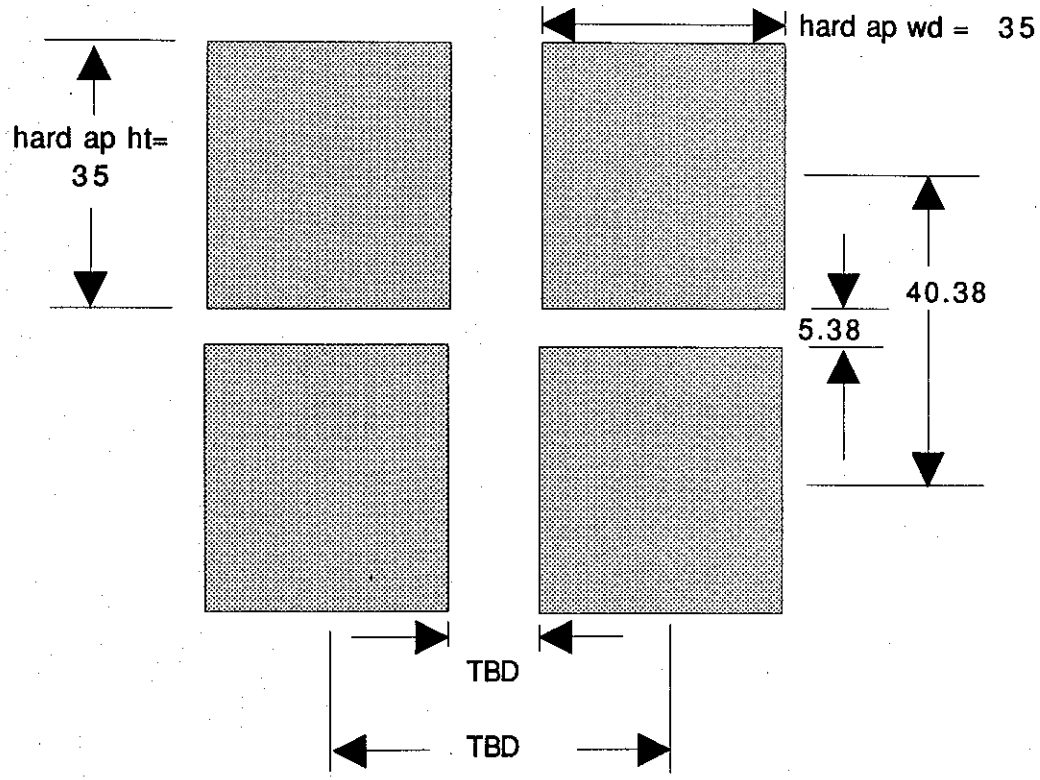

Inputs (mostly from CHAINOP output):

Design ID: case_#3_for_LDB_report_(1.8MJ/500TW)

Hard aperture width (cm): 35 height (cm): 35

Laser glass slab dimensions (cm):

length:	69.92	flslmp pump	360
width:	38.86	pulse (microsec)	
thickness:	3.66		

Extra width/height for holder (cm):

		Thckns (cm)	Nd3+ doping
Laser glass slabs (phosphate)	0	3.66	5.15E+20
Spatial filter lenses (SiO2)	1.5975	2.6	
Final focus lenses (SiO2)	7	2.9	flshlmp pk fcn
Vacuum windows (SiO2)	2	5.05	0.544
Blast shields (SiO2)	7	1	
Pockels cell windows (SiO2)	2	3	
Polarizer (HiQ BK7)	2	9	Deut fraction
Doubler crystal (KD*P)	1	1.05	0%
Tripler crystal (KD*P)	1	0.85	60%
PC crystal (KD*P)	1	1	60%
Cavity mirrors (BK7)	2	8	
Transport mirrors (BK7)	2	8	
Elbow mirrors (BK7)	2	9	

Number of beamlets:	289.8	Main amp numeric gain:	8.09
Main amp # slabs:	9	Switch amp numeric gain:	3.107
Switch amp # slabs:	5	Boost amp numeric gain:	1.927
Boost amp # slabs:	3	Amps # bmlts high:	4
Polarizer refr indx:	1.507	Amps # bmlts wide:	4
Laser glass density (gm/cc):	2.83	Doubler (KDP) density (gm/cc):	2.35
SiO2 density (gm/cc):	2.2	Tripler (KD*P) density (gm/cc):	2.35
HiQ BK7 density (gm/cc):	2.51	PC (80% deut KD*P) density (gm/cc):	2.35
BK7 density (gm/cc):	2.51	Output pow (GW)/eng (kJ):	1w 3.39E+03 1.63E+04
Explosion fraction:	0.2	(fm outpt; use 0.9 xpt and 0.85 knfm below)	3w 1.74E+03 6.21E+03

Bank energy (kJ):	858.3
MSA equivalency:	1
Apoization border (cm):	0.6761
Beam zero-int width (cm):	33.723
Beam zero-Int height (cm):	31.516
Alignment border (cm):	0.3381
Pinhole width (cm):	0.731
Pinhole height (cm):	3.418
Main-side to-mirr dist (m):	7.042
Swtch-sde to-mirr dist (m):	8.742
Spatial filter length (m):	21.284
Slab axial length (cm):	60.41
Num of polarizer lgths:	4
Switch length (m):	0.5
Extra length in cav (m):	5.5
Cav comp and end sp (m):	0.6
Slab xtr lg for holders (cm):	4.5
# slabs in booster amp:	3

	Pump Eff(%):	Energy Dens(J/cc):
Main amp:	4.79%	0.286
Switch amp:	4.67%	0.279
Boost amp:	4.51%	0.269

Injection energy at 1 ns (J):	0
Injection energy at 4.8 ns:	500
Injection energy at 11 ns:	0
Design pulse length (ns):	4.8

7/2/93 9:01 AM
form rev A

Design #3 for LDB Report
LaserPrint();DamagePrint();RunThruPrint();
Parameters:

Chain injection energy (mJ):	500.0000	
Energy density (J/cc) infinite length:	0.2947	
Slab caliper thickness (cm):	3.6577	
Number of slabs in amp 1:	9.0000	
Number of slabs in amp 2:	5.0000	
Number of slabs in amp 3:	3.0000	
Amp hard aperature width (cm):	35.0000	
Amp hard aperature area (cm^2):	1225.0000	
Laser square-pulse pulsewidth (ns):	4.8000	
Laser size (total volume laser glass) (kl):	48.9549	
Amp # beamlets wide	4.0000	
Amp # beamlets high	4.0000	
Gain cross section (E-20):	3.5000	
Slab single surface transmission:	0.9950	
Slab bulk loss coefficient:	0.0500	
Relative stored energy (MSA is unity):	1.0000	
Explosion fraction in lamps (free air):	0.2000	
Extra length in cavity (m):	5.5000	
Slab extra edge (cm):	0.1000	
Slab extra edge/thickness ratio:	0.5000	
Slab extra length for holders etc. (cm):	4.5000	
Switch length (m):	0.5000	
Cavity component end & spacing (m):	0.6000	
Number of slab-equiv lengths for the polarizer:	4.0000	
Injection mirror area (cm^2):	0.5000	
Beam dump area - both parts (cm^2):	50.0000	
Apodizing fixed per-side margin (cm):	0.5000	
Apodizing multiplier of SQRT(lambda*L):	1.5000	
Alignment fixed per-side margin (cm):	0.2500	
Alignment multiplier of SQRT(lambda*L):	0.7500	
Fluence peak/avg just after pinhole:	1.4000	
Peak/avg multipler of gain term:	0.1000	
Peak/avg multipler of delta-B:	1.0000	
Per beamlet marg (k$/bmlt):	947.0000	
Marg amps cost (k$/(bmlt-slab)):	8.3925	
Marg flashlamps cost ($/(bmlt-slab-cm):	41.2980	
Part of MOR cost ($/(bmlt-ns):	522.0000	
Part of bank ($/J):	0.1292	
Part of bank ($/(bmlt-J^.3-(slab-cm)^.7):	3.2181	
Part of spatial filter cost ($/m):	241.0000	
Laser glass bulk cost ($/cc):	1.4210	(w/o facil/pilot: 0.84)
Laser glass finish/clad cost ($/cm^2):	1.0836	(w/o facil/pilot: 0.61)
Fixed cost per beam (M$):	136.2370	
Maximum between-filter B integral:	2.2000	

Slab specs:

thickness	3.66 cm	width	69.92 cm	height	38.86 cm
covered edge	3.86 cm	volume	9.94 liters	pumped	8.46 liters
axial length	60.41 cm	module	64.91 cm	area	2716.82 cm^2/side

Amplifier specs:

	Amp 1	Amp 2	Amp 3		
slab count	9.000	5.000	3.000	total	17.000
pump effiency (%)	4.789	4.674	4.508	inf length amp	4.936
energy density (J/cc)	0.286	0.279	0.269	inf length amp	0.295
gain coefficient (/m)	5.304	5.177	4.993	inf length amp	5.467
numeric gain (pumpd/un)	8.09	3.107	1.927		
unpumped transmission	0.8959	0.9408	0.9640		
stored lw energy (J)	21759.3	11799.8	6827.7	total	40386.8
bank energy (kJ)	454.4	252.4	151.5	total	858.3

Cavity layout:
total length of cavity (m): 42.567 length of spatial filter (m): 21.284
distance from left-side mirror to farthest slab (m): 7.042
distance from right-side mirror to farthest slab (m): 8.742

Beam geometry - vignette, alignment, apodization:

	--width--	--height-		
pinhole spacing	0.731 cm	3.418 cm		
injection mirror	0.731 cm	0.684 cm	area (cm^2):	0.50
beam dump (2 parts)	7.314 cm	6.836 cm	area (cm^2):	50.00
beam angles	0.137 mrad	0.642 mrad		
beam vig shft (left side)	0.484 cm	2.262 cm		
beam vig shft (right side)	0.601 cm	2.808 cm		
hard metal aperature	35.000 cm	35.000 cm	area (cm^2):	1225.00
beam zero-intensity	33.723 cm	31.516 cm	area (cm^2):	1062.82
beam half-intensity	32.371 cm	30.164 cm	area (cm^2):	976.43

apodization border (all 4 sides) 0.6761 cm (to 1/2 intensity)
alignment border (all 4 sides) 0.3381 cm
fill factor from vignette 0.9040 of area
fill factor from alignment 0.9598 of area
fill factor from apodization 0.9187 of area
total fill factor (half-intensity/hard) 0.7971 of area

CHAINOP9 costs of NIF (proc,design,assembly,pilot,facilit; no develop,conting,taxes,overhead):

Total laser glass volume (laser size) (kl): 48.95

all marg per beamlet only costs; 289.8 beamlets at 947.0 k$ per beamlet	274.43
amp mechanical at 8.392 k$ per beamlet per slab	41.34
flash lamps at 41.3 $ per beamlet per slab per cm slab length	12.29
part of MOR at 522.0 $ per beamlet per ns	0.73
bank energy; 248.72 MJ at 0.12922 $/J	32.14
bank energy at 3.2181 $ per beamlet per (J^0.3-(slab-cm)^0.7)	7.21
spatial filter at 241.0 $/m for two filters of 21.28 m	1.49
bulk laser glass: 48.95 kl at 1.42101 $/cc	69.57
finish/clad laser glass at 1.08356 $/cm^2	29.01
fixed costs for all of above	136.24

Total:	604.44 M$
(w/o optics facil/pilot:	534.5 M$)

Specs on chain elements:

Item Name	Thick (cm)	Refr Indx	Non Lin Coeff	Angle (deg)	Pasv Xmsn
las glass	3.658	1.519	2.890	56.642	0.988
SF lens	2.600	1.450	2.700	0.000	0.990
focus lens	2.900	1.450	8.100	0.000	0.990
vac window	5.050	1.450	8.100	0.000	0.990
debris shield	1.000	1.450	8.100	55.408	0.980
PC window	3.000	1.450	2.700	0.000	0.990
pol trans	9.000	1.507	2.700	56.433	0.970
pol refl	0.000	0.000	0.000	56.433	0.980
doubler cryst	1.050	1.500	2.900	0.000	0.700
tripler cryst	0.850	1.500	8.100	0.000	1.000
PC crystal	1.000	1.500	2.890	0.000	0.969
mirrors	0.000	0.000	0.000	0.000	0.990

Summary of component fluence damage:

Component	Type	Peak Flunce J/cm^2	Max Allwd J/cm^2	Peak/ max

---	---	---	---	---
ampl	laser glass	19.314	41.202	0.469
amp2	laser glass	23.562	41.202	0.572
amp3	laser glass	35.109	41.202	0.852
SFlenses	AR	35.109	41.202	0.852
beam dump	AR	21.668	41.202	0.526
pokl cell wind	AR	23.714	41.202	0.576
wedge	AR	0.000	41.202	0.000
small UT lens	AR	0.000	41.202	0.000
pol in refl	polR	24.438	25.615	0.954
pol in trans	polT	0.484	22.413	0.022
passive rot	polT	0.000	22.413	0.000
cav mirrors	HR	6.355	30.418	0.209
xport mirrors	HR	24.052	30.418	0.791
inj mirror	HR	3.000	30.418	0.099
small UT mirr	HR	0.000	30.418	0.000
large UT mirr	HR	0.000	30.418	0.000
pokl KD*P	KD*P w/ plasma	24.148	43.818	0.551
1st freq conv	KD*P w/ plasma	23.571	43.818	0.538
2nd freq conv	KD*P @ 3w	16.573	19.718	0.841
final foc lens	AR @ 3w	16.723	18.728	0.893
vac window	AR @ 3w	17.184	18.728	0.918
blast shield	AR @ 3w	18.728	18.728	1.000

Run-through of the laser chain:

Item Name	Energy (J)	Power (GW)	Peak (J/cm^2)	Peak/ avg.	Added B Int.	Total B Int.	Energy change	Last Ph gain	Gain ratio
Inject	0.500	0.349	3.00	3.000	.000	.000	1.000	1.0	1.00
SFLens	0.495	0.346	0.717E-03	1.400	.149E-04	.149E-04	0.990	0.99	1.00
Amp3	0.919	0.643	0.132E-02	1.400	.738E-04	.887E-04	1.858	1.8	1.00
PolRefl	0.901	0.630	0.132E-02	1.400	.000	.887E-04	0.980	1.8	1.00
BeamDump	0.180E-01	0.126E-01	0.144E-02	4.000	.000	.887E-04	1.000	1.8	1.00
PoklWind	0.892	0.624	0.129E-02	1.400	.310E-04	.120E-03	0.990	1.8	1.00
PoklKDP	0.864	0.604	0.128E-02	1.400	.108E-04	.131E-03	0.969	1.7	1.00
PoklWind	0.856	0.598	0.124E-02	1.400	.298E-04	.160E-03	0.990	1.7	1.00
Amp2	2.50	1.75	0.359E-02	1.400	.275E-03	.435E-03	2.922	5.0	1.00
SFLens	2.48	1.73	0.359E-02	1.400	.746E-04	.509E-03	0.990	5.0	1.00
Pinhole									
SFLens	2.45	1.71	0.355E-02	1.400	.739E-04	.739E-04	0.990	4.9	1.00
Ampl	17.7	12.4	0.254E-01	1.400	.249E-02	.256E-02	7.238	35.	1.00
Mirror	17.6	12.3	0.254E-01	1.400	.000	.256E-02	0.990	35.	1.00
Ampl	126.	87.1	0.181	1.402	.176E-01	.202E-01	7.167	0.25E+03	1.02
SFLens	125.	86.2	0.181	1.402	.372E-02	.239E-01	0.990	0.25E+03	1.02
Pinhole									
SFLens	123.	85.4	0.179	1.400	.368E-02	.368E-02	0.990	0.24E+03	1.02
Amp2	354.	241.	0.509	1.404	.385E-01	.421E-01	2.869	0.69E+03	1.06
PoklWind	350.	238.	0.509	1.404	.118E-01	.540E-01	0.990	0.68E+03	1.06
PoklKDP	340.	231.	0.504	1.406	.414E-02	.581E-01	0.969	0.66E+03	1.06
PoklWind	336.	228.	0.489	1.406	.114E-01	.695E-01	0.990	0.65E+03	1.06
PolTrans	326.	222.	0.484	1.407	.266E-01	.961E-01	0.970	0.63E+03	1.06
Mirror	323.	219.	0.471	1.410	.000	.961E-01	0.990	0.63E+03	1.06
PolTrans	313.	213.	0.466	1.410	.256E-01	.122	0.970	0.61E+03	1.06
PoklWind	310.	211.	0.453	1.413	.105E-01	.132	0.990	0.60E+03	1.06
PoklKDP	300.	204.	0.449	1.414	.366E-02	.136	0.969	0.58E+03	1.06
PoklWind	297.	202.	0.435	1.415	.101E-01	.146	0.990	0.58E+03	1.06
Amp2	804.	526.	1.17	1.426	.869E-01	.233	2.705	0.15E+04	1.15
SFLens	796.	520.	1.17	1.426	.224E-01	.255	0.990	0.15E+04	1.15
Pinhole									
SFLens	788.	515.	1.14	1.400	.222E-01	.222E-01	0.990	0.15E+04	1.15
Ampl	0.420E+04	0.213E+04	6.35	1.478	.554	.576	5.325	0.61E+04	1.97
Mirror	0.416E+04	0.210E+04	6.35	1.478	.000	.576	0.990	0.60E+04	1.97
Ampl	0.982E+04	0.335E+04	19.3	1.920	1.25	1.82	2.363	0.96E+04	5.12

SFLens	0.972E+04	0.332E+04	19.3	1.920	.143	1.97	0.990	0.95E+04	5.12
Pinhole									
SFLens	0.963E+04	0.328E+04	13.9	1.400	.142	.142	0.990	0.94E+04	5.12
Amp2	0.146E+05	0.367E+04	23.6	1.581	.892	1.03	1.511	0.10E+05	11.9
PoklWind	0.144E+05	0.363E+04	23.6	1.581	.181	1.21	0.990	0.10E+05	11.9
PoklKDP	0.140E+05	0.352E+04	24.1	1.637	.632E-01	1.28	0.969	0.10E+05	11.9
PoklWind	0.138E+05	0.348E+04	23.7	1.659	.173	1.45	0.990	0.10E+05	11.9
PolRefl	0.135E+05	0.342E+04	24.4	1.727	.000	1.45	0.980	0.98E+04	11.9
BeamDump	271.	68.3	21.7	4.000	.000	1.45	1.000	0.98E+04	11.9
Amp3	0.169E+05	0.353E+04	35.1	2.026	.531	1.98	1.250	0.10E+05	21.4
SFLens	0.168E+05	0.349E+04	35.1	2.026	.150	2.13	0.990	0.10E+05	21.4
Pinhole									
SFLens	0.166E+05	0.346E+04	24.0	1.400	.149	.149	0.990	0.99E+04	21.4
Xport4m	0.163E+05	0.339E+04	24.1	1.416	.000	.149	0.980	0.97E+04	21.4
Triple1	0.114E+05	0.237E+04	23.6	1.416	.527E-01	.202	0.700	0.68E+04	21.4
Triple3	0.114E+05	0.237E+04	16.6	1.422	.997E-01	.301	1.000	0.68E+04	21.4
FocusLens	0.113E+05	0.235E+04	16.7	1.435	.339	.640	0.990	0.67E+04	21.4
VacWindow	0.112E+05	0.232E+04	17.2	1.490	.584	1.22	0.990	0.66E+04	21.4
BlastShld	0.109E+05	0.228E+04	18.7	1.640	.168	1.39	0.980	0.65E+04	21.4
KForm	0.836E+04	0.174E+04	14.0	1.640	.000	1.39	0.765	0.50E+04	21.4
ngFreqCon	0.621E+04	0.174E+04	10.4	1.640	.000	1.39	0.743	0.37E+04	21.4

```
In[8]:
energy;
1.8e+06
power;
5.04e14
nBeamlets;
289.80
```

Determination of Cost Coefficients for CHAINOP

-W. Williams
x 31945

Point design around which cost scaling with aperture is determined:

Design ID: case_#3_for_LDB_report_(1.8MJ/500TW)

Apature (cm) width: 35 height: 35 avg: 35
Number of beamlets: 289.80

Component:	Dimensions (cm) Width	Hgt	Thick	NIF # Pcs	NIF Vol (l)	NIF Area (m2)
Laser glass slabs (phosphate)	69.92	38.86	3.66	4927	48993	2677.2
Spatial filter lenses (SiO2)	36.79	37.48	2.60	1159	4156	319.7
Final focus lenses (SiO2)	41.40	39.19	2.90	290	1364	94.0
Vacuum windows (SiO2)	36.40	34.19	5.05	290	1821	72.1
Debris shields (SiO2)	41.40	63.70	1.00	290	764	152.9
Pockels cell windows (SiO2)	36.68	35.51	3.00	580	2265	151.0
Polarizer (HiQ BK7)	36.61	67.95	9.00	290	6487	144.2
Doubler cryst KDP	35.40	33.19	1.05	290	358	68.1
Tripler cryst KD*P	35.40	33.19	0.85	290	289	68.1
PC crystal KD*P	35.68	34.51	1.00	290	357	71.4
Cavity mirrors (BK7)	36.40	34.19	8.00	580	5771	72.1
Transport mirrors (BK7)	41.76	38.30	8.00	773	9889	123.6
Elbow mirrors (BK7)	36.47	60.22	9.00	290	5729	63.7

Nd3+/ cc: 5.15 e20

		KD*P test	KDP test	label
Deut:	0%	0	1	KDP
	60%	1	0	KD*P
	60%	1	0	KD*P

Total SiO2 vol (kl): 10.37
Total area of flats (m2): 3457
Total area of lenses (m2): 414
Total area of crystals (m2): 208

Optics costs for point design using scalings from J. Atherton 5/3/93 printout:

-- Proprietary information: Do not duplicate --

Cap equip/Facilities + Pilot production + Production (construction)	Bulk		Finish		Coating		Totals	
	NIF (M$)	*bmlt (k$)*	*NIF (M$)*	*bmlt (k$)*	*NIF (M$)*	*bmlt (k$)*	*NIF (M$)*	*bmlt (k$)*
Laser glass slabs (phosphate)*	69.54	239.9	29.01	100.10	0.00	0.00	98.55	340.05
Spatial filter lenses (SiO2)	7.62	26.3	6.06	20.92	1.07	3.70	14.76	50.94
Final focus lenses (SiO2)	2.50	8.6	1.78	6.16	0.31	1.07	4.60	15.86
Vacuum windows (SiO2)	3.34	11.5	1.02	3.54	0.25	0.85	4.61	15.92
Debris shields (SiO2)	1.40	4.8	2.83	9.78	0.48	1.66	4.72	16.28
Pockels cell windows (SiO2)	4.16	14.3	2.15	7.40	0.51	1.76	6.81	23.51
Polarizer (HiQ BK7)	3.24	11.2	2.36	8.15	3.34	11.51	8.94	30.85
Doubler cryst KDP	1.74	6.0	2.13	7.34	0.28	0.96	4.15	14.31
Tripler cryst KD*P	4.87	16.8	2.13	7.34	0.28	0.96	7.28	25.11
PC crystal KD*P	6.01	20.7	2.23	7.69	0.29	1.00	8.53	29.42
Cavity mirrors (BK7)	2.89	10.0	1.42	4.90	2.91	10.03	7.21	24.88
Transport mirrors (BK7)	1.48	5.1	2.43	8.39	4.42	15.26	8.34	28.77
Elbow mirrors (BK7)	0.86	3.0	1.25	4.32	2.30	7.94	4.41	15.23
Totals:	109.65	378.4	56.81	196.02	16.44	56.71	182.90	631.1

Nd3+/ cc: 5.15 e20
(Ahterton cost validity range: 2 - 5e20)

Deut: 0%
60%
60%
(Atherton cost validity range: 60-80%)

Total marg optics cost for NIF (M$): 182.90 w/o facil,pilot: 113.10
Total marg cost per beamlet (k$): 631.1 w/o facil,pilot: 390.3
Full cost (k$): 193696 (optics only; includes facil+pilot+prod+fixed costs, but not devel (see below))
Full cost (k$): 123901 (optics only; includes prod+fixed costs, but not devel,facil,pilot)
* finish cost includes edge cladding

Cap equip/Facilities	Bulk		Finish		Coating	
	NIF (M$)	bmlt (k$)	NIF (M$)	bmlt (k$)	NIF (M$)	bmlt (k$)
Laser glass slabs (phosphate)	18.73	64.65	8.68	29.95	0	0
Spatial filter lenses (SiO2)	2.37	8.18	1.72	5.93	0.192	0.66
Final focus lenses (SiO2)	0.78	2.68	0.51	1.74	0.056	0.19
Vacuum windows (SiO2)	1.04	3.59	0.48	1.67	0.043	0.15
Debris shields (SiO2)	0.44	1.50	1.35	4.64	0.092	0.32
Pockels cell windows (SiO2)	1.29	4.46	1.01	3.49	0.091	0.31
Polarizer (HiQ BK7)	0	0	1.13	3.89	0.633	2.18
Doubler cryst KDP	0.22	0.76	0.82	2.82	0.041	0.14
Tripler cryst KD*P	0.27	0.92	0.82	2.82	0.041	0.14
PC crystal KD*P	0.33	1.13	0.86	2.96	0.043	0.15
Cavity mirrors (BK7)	0	0	0.47	1.63	0.633	2.18
Transport mirrors (BK7)	0	0	0.81	2.80	1.085	3.74
Elbow mirrors (BK7)	0	0	0.42	1.44	0.559	1.93
Totals:	25.47	87.87	19.07	65.80	3.51	12.10

Pilot Production	Bulk		Finish		Coating	
	NIF (M$)	bmlt (k$)	NIF (M$)	bmlt (k$)	NIF (M$)	bmlt (k$)
Laser glass slabs (phosphate)	9.799	33.811	4.016	13.857	0	0
Spatial filter lenses (SiO2)	1.346	4.646	0.479	1.655	0.139	0.480
Final focus lenses (SiO2)	0.442	1.525	0.141	0.487	0.035	0.120
Vacuum windows (SiO2)	0.590	2.036	0.108	0.373	0.035	0.120
Debris shields (SiO2)	0.248	0.854	0.229	0.791	0.035	0.120
Pockels cell windows (SiO2)	0.734	2.533	0.227	0.782	0.070	0.240
Polarizer (HiQ BK7)	0	0	0.216	0.746	0.464	1.600
Doubler cryst KDP	0	0	0.204	0.705	0.035	0.120
Tripler cryst KD*P	0	0	0.204	0.705	0.035	0.120
PC crystal KD*P	0	0	0.214	0.739	0.035	0.120
Cavity mirrors (BK7)	0	0	0.108	0.373	0.377	1.300
Transport mirrors (BK7)	0	0	0.185	0.640	0.618	2.134
Elbow mirrors (BK7)	0	0	0.095	0.329	0.290	1.000
Totals:	13.16	45.41	6.43	22.18	2.17	7.47

Production (Construction)	Bulk		Finish		Coating	
	NIF (M$)	bmlt (k$)	NIF (M$)	bmlt (k$)	NIF (M$)	bmlt (k$)
Laser glass slabs (phosphate)	41.003	141.49	16.31	56.29	0	0
Spatial filter lenses (SiO2)	3.9074	13.48	3.87	13.34	0.743	2.56
Final focus lenses (SiO2)	1.2822	4.42	1.14	3.92	0.219	0.75
Vacuum windows (SiO2)	1.7126	5.91	0.43	1.49	0.168	0.58
Debris shields (SiO2)	0.7186	2.48	1.26	4.35	0.355	1.23
Pockels cell windows (SiO2)	2.1299	7.35	0.91	3.13	0.351	1.21
Polarizer (HiQ BK7)	3.2437	11.19	1.02	3.51	2.2388	7.73
Doubler cryst KDP	1.5211	5.25	1.1036	3.81	0.204	0.70
Tripler cryst KD*P	4.6046	15.89	1.1036	3.81	0.204	0.70
PC crystal KD*P	5.6779	19.59	1.1567	3.99	0.213	0.74
Cavity mirrors (BK7)	2.8854	9.96	0.84	2.89	1.8956	6.54
Transport mirrors (BK7)	1.4834	5.12	1.44	4.96	2.7184	9.38
Elbow mirrors (BK7)	0.8594	2.97	0.74	2.55	1.453	5.01
Totals:	71.03	245.10	31.31	108.04	10.76	37.13

-- Proprietary information: Do not duplicate --

Scaling Equations for CHAINOP costing:

The scaling equations from WBS items, as used in CHAINP, are broken into 9 categories:

1) fixed costs for facility, or fixed with a scaling with number of beamlets
   Most WBS items fall into this category. They are summarized in the table below.
2) flashlamps, which scale with number of beamlets. number of slabs per beamlet, and slab axial length. CHAINOP inputs of amp number beamlets high and wide and lamp packing fraction (as calculated by K. Jancaitis) are also required.
3) amplifier segments, which scale with number of beamlets and number of slabs per beamlet. CHAINOP input of amp number of beamlets high and wide are also required.
4) front end, which scales with number of beamlets and laser pulse length.
5) power conditioning system, which scales with bank energy, pumping pulse length, and energy per flashlamp.
6) spatial filters, which scale with SFlength (trivial ap scaling)
7) laser glass bulk, which scales with slab volume ($/cc)
8) laser glass finish, which scales with slab surface area ($/cm2)
9) all other optics, which scales with number of beamlets

1) Facility fixed costs, or fixed with scaling with number of beamlets.

	Procurement		Design		Assembly		
		Marg		Marg		Marg	
WBS Item	Fixed (k$)	(*Nb) (k$)	Fixed (k$)	(*Nb) (k$)	Fixed (k$)	(*Nb) (k$)	Comments
1. Project Office	13564		2000				
2. Conventional Facilities	16300				1737		assumes 60 ft extension on blg 391
3. Laser							
3.1 Front End							-- see (4) below --
3.2 Main Amp System							
3.2.1 Main Amps							
3.2.1.1 Flashlamp Assemblies							-- see (2) below --

3.2.1.3, 3.2.1.5-7 (amp mech)						-- see (3) below --
3.2.1.4 Cooling and Purge Sys						?? not yet determined
3.2.2 Spatial Filters						-- see (6) below --
3.2.3 Mirror Mounts		16.2	55.1	7.3	1.64	
3.2.4 Polarizer Assembly	216.4	7.69	310.5		4.333	
3.2.5 Pockels' Cell Assembly	725.3	83.185	2195.3	482.9	16.337	
3.2.6 Boost Amp						
3.2.6.1 Flashlamp Assemblies						-- see (2) below --
3.2.6.3, 3.2.6.5-7 (amp mech)						-- see (3) below --
3.2.6.4 Cooling and Purge Sys						?? not yet determined
3.2.7 Interstage Hdw		3.9	14.6	2.9	0.096	
3.3 Beam Xport System						
3.3.1 Spatial Filters						-- see (6) below --
3.3.2 Mirror Assembly		13.7	53.8	7.3	1.45	
3.3.3 Final Optics System		20.4	135.1	17.4	2.06	
3.3.4 Beam Tube System		7.92	29.9	5.8	0.119	
3.3.5 Interstage Hdw						-- no identifiable items here
3.4 Power Cond System						-- see (5) below --
3.5 Align and Laser Diag	657	114	7475	130	79	
3.6 Space Frame						-- see (10) below --
3.7 Laser Aux Systsems	725			1873		?? needs scaling
4. Target Area						
4.1 Chamber and Containment						
4.1.1 Walls	9477	2.63	300	6000		
4.1.2 n/gamma shield	1750		150	350		
4.1.3 Chamber Port System	65		0	0		
4.1.4 Chamber Vacuum System	1400		0	0		?? begin rechecked by Patton
4.1.5 EMI Mitigation System	200					total cost
4.1.6 Chmbr Therml Contl Sys						-- no thermal control system
4.2 Final Optics Protection						
4.2.1 Debris Shield Holders		3.25	0	0		
4.2.2 Other Protection Sys	45	7	75	550		
4.3 Target Positioning						
4.3.1 Inserter/Positioner	1350		300	1020		
4.3.2 Target Align Support Hdw	250		75	0		
4.3.3 Target Thrml Contr Hdw	450		40	0		

4.4 Target Diags	9000						total cost
4.5 Target Spaceframe	1000		1680		0		
4.6 Environ Protection System	500		150		85		
4.7 Target Area Aux Systems	2100		300		1400		
5. Intgrtd Comp Contl System	2129	16.71	3560		806	3	
totals:	61904	297	18899	0	14475	108	

total fixed (k$):	95278
total per beam (k$):	405

2) Flash lamps cost

procurement (k$):

*(400 + 2.3 Llamp)*Nlamps*.001*

where N_{lamps} = # lamps in NIF

$$= \left(N_{slabsA1} + N_{slabsA2} + N_{slabsA3}\right)\left(\frac{L_{slabaxial} F_{pack}}{2.5\ \text{cm}}\right)\left(\frac{N_B}{H_{amp} W_{amp}}\right)\left(W_{amp}\right)$$

Llmp = Hamp Hap + (Hamp - 1)Sspace = lamp length (cm)
Hap = hard aperture height (cm)
Hamp = amplifier # beamlets high (e.g. 4) (input to CHAINOP)
Wamp = amplifier # beamlet wide (e.g. 4) (input to CHAINOP)
Sspace = vertical hard ap to hard ap spacing (cm) (from Summary)
Lslabaxial = axial length of a slab (cm) (e.g. 60) (from CHAINOP)
Fpack = packing fraction of lamps (e.g. 0.544) (from Jancitis/CHAINOP)
(based on 2.5 cm ID lamps and
side cassettes having 1/2 packing fraction of central cassettes)

design (k$): 0
assembly (k$ 0 (incl in amp segments)

3) Amplifier segments cost (per beamlet for assemb; fixed for proc, design)

procurement (k$):

Ch(NslabsA1 + NslabsA2 + NslabsA3)* Nb + 882*

where

$$Ch = 8.55 + \frac{30.88}{e^{H_{amp}}} - 0.51 H_{amp} + \frac{7.77 - 1.38 H_{amp} + 0.13 H_{amp}^2}{e^{0.8 W_{amp}}} + \left(0.0001 - 0.016 H_{amp} + 0.007 H_{amp}^2 - 0.0012 H_{amp}^3 + 0.000068 H_{amp}^4\right) W_{amp}$$

(note: the $882 k fixed cost is for all amps and flashlamps, but is included here)

design cost (k$): 2370

assembly cost (k$): (0.770 /Hamp^0.7 + 0.461 / (Hamp^0.7Wamp) +
1.953 /Hamp^0.6)(NslabsA1 + NslabsA2 + NslabsA3)
(includes BAU and flash lamp cassette;
variables defined in (2) above)

4) Front end costs (k$):

regen/preamp (for one regen/preamp per beamlet):

procurement: 72.5Nb + 61 for 0 < Einj < 0.5 J
97.5Nb + 61 for 0.5 < Einj < 3 J
102.3Nb + 61 for 3 < Einj < 10 J

design: 3328

assembly: 20.87Nb

MOR:

procurement: (19.73 + 0.458taueq)Nb + 701

design: 940.90

assembly: (4.52 + 0.064taueq)Nb + 87.7

1.4185

5) Power Conditioning costs (k$):

procurement:

$$0.001\left(7.21e6 + \frac{E_{bank}}{0.85}\left(0.104 + 0.005\left(\frac{500 - S_p(\mu s)}{120}\right)\right) + 0.027 E_{bank}\left(\frac{E_{lamp}}{E_{lamp0}}\right)^{-0.7}\right)$$

where Sp is the flashlamp pump pulse duration, Elamp is (Ebank/Nlamps), and Elamp0 = 17 kJ/lamp
This is broken into three parts: one fixed and two marginal with different scalings (see below)

design: 0 (incl in procurment fixed cost)

assembly: 0 (incl in procurement)

6) Spatial filter (cavity and transport) costs (k$):

procurement (k$): 914 + 92.33*Nb*(.94 + .06(SFLength/23 m))
= 914 + 86.79*Nb + 0.241*Nb*SFLength
design (k$): 1374
assembly (k$): 21.483*Nb

7) Laser glass bulk cost ($/cc), including production, pilot, and facilitization 1.4185
8) Laser glass finishing/cladding cost ($/cm2), including production, pilot, and facilitization 1.0886
9) Cost of all optics besides laser glass (k$/beamlet), including production, pilot, and facili 293.54
Fixed facility costs associated with optics (k$) (design and misc proc) 10800
Development (pre-production) costs at vendor (not TPC dollars ?) (k$): 26550
Development (pre-production) costs at LLNL (not TPC dollars ?) (k$): 25900
10) Space Frame costs for laser (k$) (put under fixed costs):

proc (k$): 8000*(Vlasglass / 30.6 kl)^0.6
design (k$): 1680

Total cost: production,pilot,facilitization; not devel,overhead,taxes,conting

Total cost as reported in this CHAINOP run (M$): 604.44

--- this should be approximately equal to ---

This CHAINOP run is used to determine new cost coefficients below.
Total cost as detemined by these coefficients (M$): 604.30

--- and this should be approximately equal to ---

Total cost as determined from detailed cost eqns (M$): 604.30

Ditto w/o optics facil,pilot: 534.50

These detailed costs are racked up as follows:

WBS Item	Proc (k$)	Design (k$)	Assem (k$)	Total (k$)
1. Project Office	13564	2000	0	15564
2. Conventional Facilities	16300	0	1737	18037
3. Laser				
3.1 Front End	35372	4268.9	7534.7	47176
3.2 Main Amp System				115542
3.2.1 Main Amps				47424
3.2.1.1 Flashlamp Assemblies	10122	0	0	10122
3.2.1.3, 3.2.1.5-7 (amp mech)	30122	2370	4810	37302
3.2.1.4 Cooling and Purge Sys	???	???	???	
3.2.2 Spatial Filters	12902	275	2811.9	15988
3.2.3 Mirror Mounts	4694.8	55.1	482.57	5232.4
3.2.4 Polarizer Assembly	2445	310.5	1255.7	4011.2
3.2.5 Pockels' Cell Assembly	24832	2195.3	5217.4	32245
3.2.6 Boost Amp				9465.4
3.2.6.1 Flashlamp Assemblies	2169	0	0	2169
3.2.6.3, 3.2.6.5-7 (amp mech)	6265.7	0	1030.7	7296.4
3.2.6.4 Cooling and Purge Sys	???	???	???	
3.2.7 Interstage Hdw	1130.2	14.6	30.721	1175.5
3.3 Beam Xport System				32642
3.3.1 Spatial Filters	14651	1099	3413.8	19164
3.3.2 Mirror Assembly	3970.3	53.8	427.51	4451.6
3.3.3 Final Optics System	5911.9	135.1	614.39	6661.4
3.3.4 Beam Tube System	2295.2	29.9	40.286	2365.4
3.3.5 Interstage Hdw	0	0	0	0

Total (M$): 604.30

WBS Item	Proc (k$)	Design (k$)	Assem (k$)	Total (k$)
3.4 Power Cond System	46560	0	0	46560
3.5 Align and Laser Diag	33694	7475	23024	64193
3.6 Space Frame	10611	1680	0	12291
3.7 Laser Aux Systsems	725	0	1873	2598
4. Target Area				43795
4.1 Chamber and Containment				20454
4.1.1 Walls	10239	300	6000	16539
4.1.2 n/gamma shield	1750	150	350	2250
4.1.3 Chamber Port System	65	0	0	65
4.1.4 Chamber Vacuum System	1400	0	0	1400
4.1.5 EMI Mitigation System	200	0	0	200
4.1.6 Chmbr Thermal Contl Sys	0	0	0	0
4.2 Final Optics Protection				3640.5
4.2.1 Debris Shield Holders	941.85	0	0	941.85
4.2.2 Other Protection Sys	2073.6	75	550	2698.6
4.3 Target Positioning				3485
4.3.1 Inserter/Positioner	1350	300	1020	2670
4.3.2 Target Align Support Hdw	250	75	0	325
4.3.3 Target Thrml Contr Hdw	450	40	0	490
4.4 Target Diags	9000	0	0	9000
4.5 Target Spaceframe	1000	1680	0	2680
4.6 Environ Protection System	500	150	85	735
4.7 Target Area Aux Systems	2100	300	1400	3800
5. Intgrtd Comp Contl System	6971.6	3560	1675.4	12207
6. Optics (incl proc,pilot,facil; no devel)				193696

The above costs result in the following coefficients for CHAINOP (which should be very similar to those used in the optimizatior the case should be re-run with these) (all costs in k$):

		current design resulting costs (M$):
136237	1) fixed costs:	136.24
	2) marginal per beamlet (most items):	274.32
922	for 0 < Einj < 0.5 J	
947	for 0.5 < Einj < 3 J	
951	for 3 < Einj < 10 J	
8.39245892	3) marginal per beamlet per slab (amps):	41.35
0.04129804	4) marginal per beamlet per slab per cm (flashlamps):	12.29
0.522	5) marginal per beamlet per ns (MOR):	0.73
0.00012922	6) marginal per beamlet per J (power cond):	32.14
0.00321808	7) marginal per beamlet per J^0.3 per slab^0.7 per cm^0.7 (power cond):	7.21
0.241	8) marginal per beamlet per m (spatial filter):	1.49
1.42041489	9) marginal per cc (laser glass bulk):	69.54
0.00108356	10) marginal per cm2 (laser glass finish/clad):	29.01
	total:	604.30

data for pie chart

15.6	15.6	1. Project Office
18.0	18.0	2. Conventional Facilities
47.2	47.2	3.1 Front End
115.5	115.5	3.2 Main Amp System
32.6	32.6	3.3 Beam Xport System
46.6	46.6	3.4 Power Cond System
64.2	64.2	3.5 Align and Laser Diag
14.9	14.9	3.6/3.7 Space Frame/Aux Sys
43.8	43.8	4. Target Area
12.2	12.2	5. Intgrtd Comp Contl System
193.7	193.7	6. Optics
	604.3 *Total (M$)*	

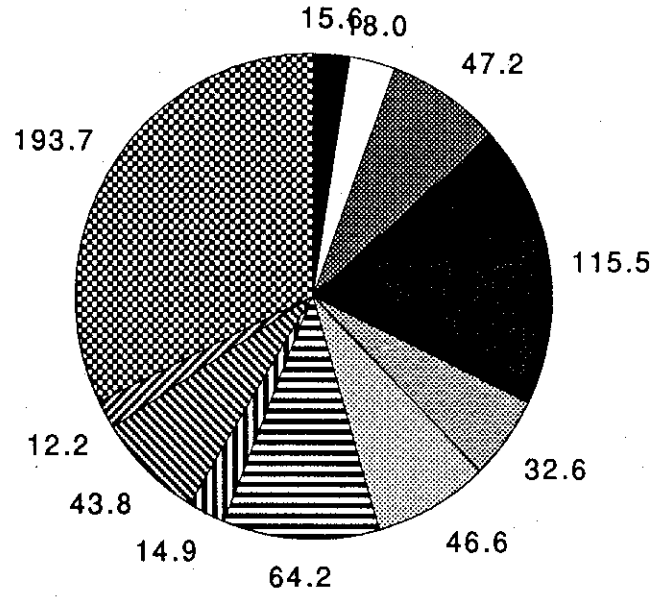

NIF Configuration Summary
Design 4

NIF Configuration Summary

Engineering Design Information from CHAINOP for Laser Design Basis Study

- W. Williams
x31945

Design summary for: ***Design_#4_for_LDB_Report_(1.8MJ/500TW)***

- 240.2 beamlets
- 15 beamlines
- 4 x 4 amps
- slab layout: 11 5 3
- 38 cm hard aperture'
- laser slab thickness (cm): 3.23
- free-air expl fctn (%): 20

- contrast ratio of 3w pulse: 50:1
- design pulse length (ns): 4.80
- design inj energy (J): 0.5
- chain output:

	power (GW)	energy (kJ)
1w @ freq conv	4080.0	19.60
3w @ LEH(abv*.85*.86*X)	2097.4	7.49
(freq conv eff X (power):	0.7	
(freq conv eff X (energy):	0.52)	

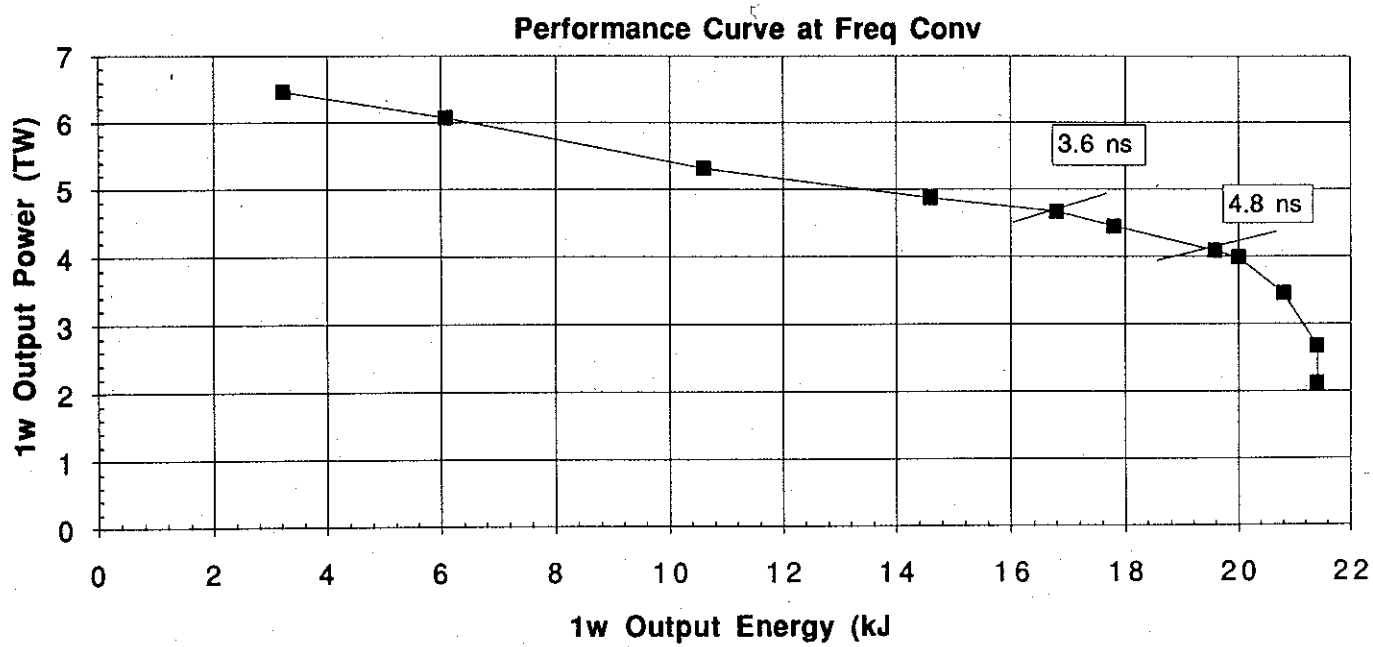

7/2/93 2:55 PM
format rev A

Figure 1: Baseline layout dimensions from CHAINOP (drawing not to scale; dimensions in m)

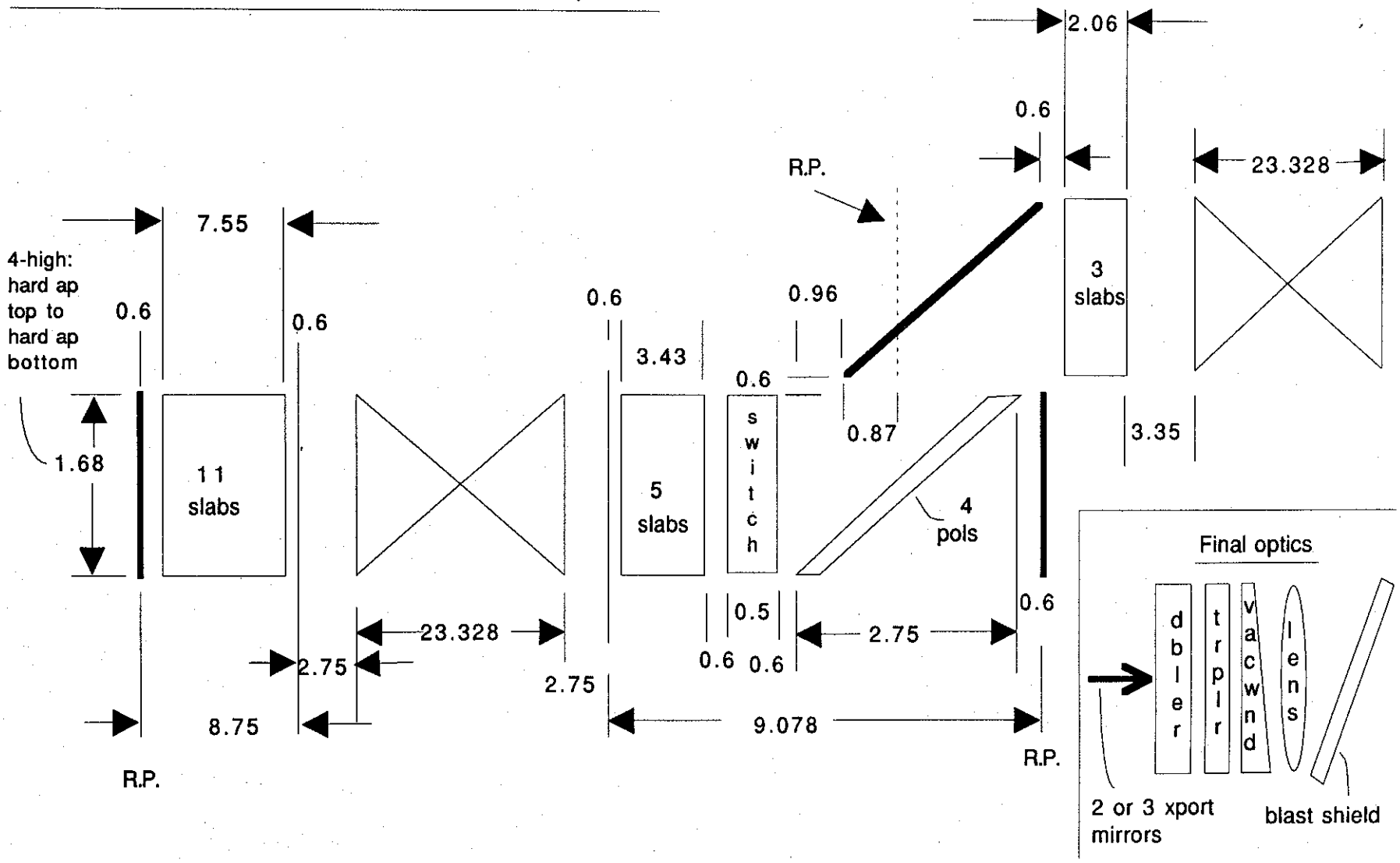

7/2/93 2:00 PM
format rev A

Design information by WBS element:

3.1 Front End

Injection energy (J):	0.0198 at 1 ns
(nominal gain/loss)	0.5 at 4.8 ns
	1.77 at 10 ns

3.2 Main Amplification System (see Figures 1-4)

MSA equivalency:	1	
Amplifier numeric gain (pumped/unpumped ratio):		
main amp:	10.09	
switch amp:	2.773	
boost amp:	1.804	
Cavity spatial filter length (m):	23.328	
Axial ghost focus standoff (amp end to lens)(m):	3.35	
Cavity component end spacing (m):	0.6	
Polarizer axial (z) length (m):	2.75	
Switch axial (z) length (m):	0.5	
Center point to center point laser slab spacing (cm):		
in x (per N. Frank) (see Fig 5):	TBD	
in y (per N. Frank) (see Fig 5):	43.38	
in z (per CHAINOP input):	68.64	
Hard ap edge to hard ap edge laser slab spacing (cm):		
in x (per N. Frank) (see Fig 5):	TBD	
in y (per N. Frank) (see Fig 5):	5.38	
in z (per CHAINOP input) (see Fig 4):	4.5	
Minimum clear aperture size (cm) (width/height):		
at main amp:	38.0	37.9
at switch amp:	38.0	38.0
at SF lens:	38.2	38.8

at cavity mirrors:	37.4	35.3	
PC switch:	37.7	36.6	
Polarizer	37.6	36.3	
Extra width/height on optics for holders (cm):			
Phosphate laser glass in all amps:	0		
SiO2 cavity SF lens:	1.671		
BK7 cavity mirrors:	2		
KD*P PC switch:	1		
SiO2 PC switch windows:	2		
HiQ BK7 polarizer:	2		
Optical material sizes (cm) (width/height/thickness):			
Phosphate laser glass in all amps:	74.7	41.4	3.2
SiO2 cavity SF lens:	39.8	40.5	2.6
BK7 cavity mirrors:	39.4	37.3	8.0
KD*P PC switch:	38.7	37.6	1.0
SiO2 PC switch windows:	39.7	38.6	3.0
HiQ BK7 polarizer:	39.6	73.6	9.0

3.3 Beam Transport System

Transport spatial filter length (m): (CHAINOP assumes this to be the same as the cavity SF length. The actual difference will have some impact on pinhole width)	23.328
Axial ghost focus standoff (amp end to lens) (m): (assumed to be the same as the cavity standoff for beam size calcs and Figure 1)	3.35

3.4 Power Conditioning

Pump efficiency (%):	
in main amp:	0.04624
in switch amp:	0.04489
in boost amp:	0.04329

Pumping energy density (J/cc):	
in main amp:	0.293
in switch amp:	0.284
in boost amp:	0.274
Required bank energy per chain (kJ) (no margain):	1052.3

6.0 Optical Materials:

Component:	Dimensions (cm) Width	Height	Thickness	Piece Vol. (liters)	Piece Wt (kg)	Piece Finised Area (cm2)	Notes
Laser glass slabs (phosphate)	74.7	41.4	3.2	9.99	28.27	6186	5.15E+20
Spatial filter lenses (SiO2)	39.8	40.5	2.6	4.19	9.23	3226	Nd3+/cc
Final focus lenses (SiO2)	44.4	42.3	2.9	5.45	12.00	3762	
Vacuum windows (SiO2)	39.4	37.3	5.1	7.43	16.35	2944	
Blast shields (SiO2)	44.4	69.2	1.0	3.08	6.77	6152	
Pockels cell windows (SiO2)	39.7	38.6	3.0	4.60	10.11	3063	
Polarizer (HiQ BK7)	39.6	73.6	9.0	26.23	65.85	5830	Deut frac:
Doubler crystal (KD*P)	38.4	36.3	1.1	1.47	3.45	2792	0%
Tripler crystal (KD*P)	38.4	36.3	0.9	1.19	2.79	2792	60%
PC crystal (KD*P)	38.7	37.6	1.0	1.45	3.42	2909	60%
Cavity mirrors (BK7)	39.4	37.3	8.0	11.78	29.56	1472	
Transport mirrors (BK7) *	45.4	41.7	8.0	15.13	37.99	1892	
Elbow mirrors (BK7)	39.5	65.9	9.0	23.43	58.81	2603	

*effective dimensions

Component:	NIF # Pieces	Tot NIF Vol (liters)	Tot NIF Area (m2)
Laser glass slabs (phosphate)	4563.8	45597	2823.3
Spatial filter lenses (SiO2)	960.8	4029	309.9
Final focus lenses (SiO2)	240.2	1310	90.4
Vacuum windows (SiO2)	240.2	1785	70.7
Blast shields (SiO2)	240.2	739	147.8
Pockels cell windows (SiO2)	480.4	2208	147.2
Polarizer (HiQ BK7)	240.2	6301	140.0
Doubler crystal (KD*P)	240.2	352	67.1
Tripler crystal (KD*P)	240.2	285	67.1
PC crystal (KD*P)	240.2	349	69.9
Cavity mirrors (BK7)	480.4	5657	70.7
Transport mirrors (BK7)	641	9694	121.2
Elbow mirrors (BK7)	240.2	5628	62.5

Summary:

Total laser glass vol (kl):	45.60
Total SiO2 vol (kl):	10.07
Total std/HiQ BK7 vol (kl):	27.28
Total KD*P/KDP vol (kl):	0.99
Total optical matls vol (kl):	83.93
Total las glass area (m2):	2823.3
Total SiO2 area (m2):	765.9
Total std/HiQ BK7 area (m2):	394.5
Total KD*P/KDP area (m2):	204.0
Total optical matls area (m2):	4187.7

Minimum required clear aperture (these values dictate piece sizes):

Component:	Width (cm):	Height (cm):
Main amp laser slabs	38.0	37.9
Switch amp laser slabs	38.0	38.0
Booster amp laser slabs	37.7	35.3
Cavity spatial filter lenses	38.2	38.8
Xport spatial filter lenses	37.9	35.3
PC switch KD*P crystal	37.7	36.6
PC Windows	37.7	36.6
Polarizer	37.6	36.3
Cavity mirrors	37.4	35.3
Elbow mirrors	37.5	35.3
Transport mirrors	37.4	35.3
Doubler KDP crystal	37.4	35.3
Tripler KD*P crystal	37.4	35.3
Vacuum windows	37.4	35.3
Final focus lenses	37.4	35.3
Blast shields	37.4	35.3

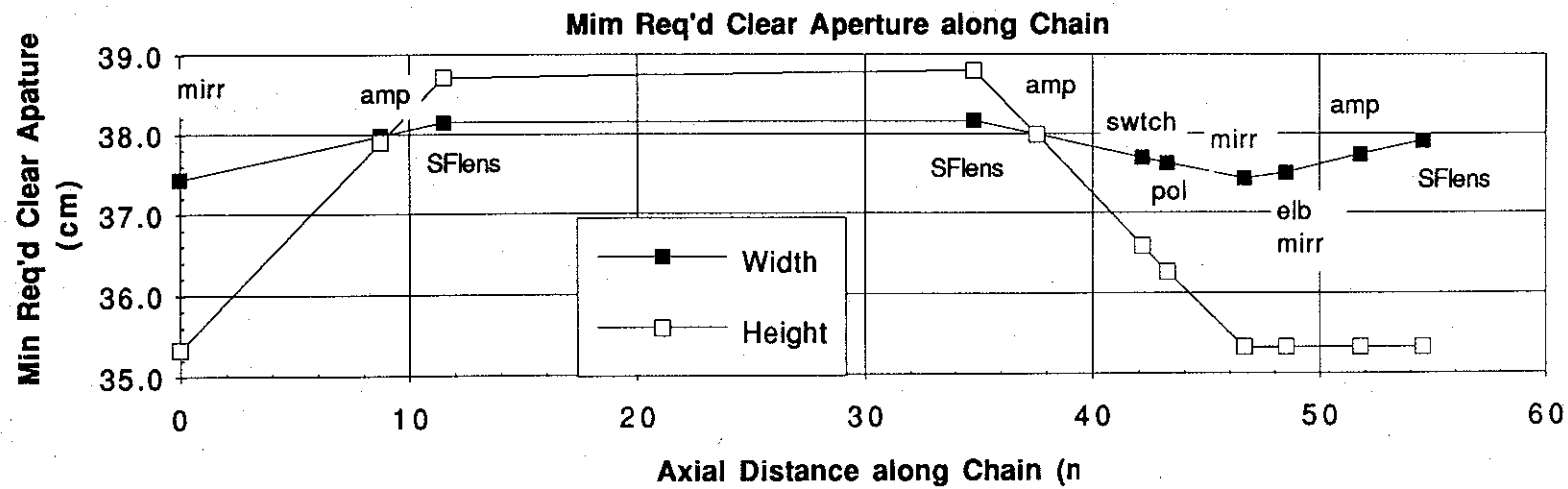

7/2/93 2:41 PM
format rev A

Figure 2: Amplifier directional fiducial

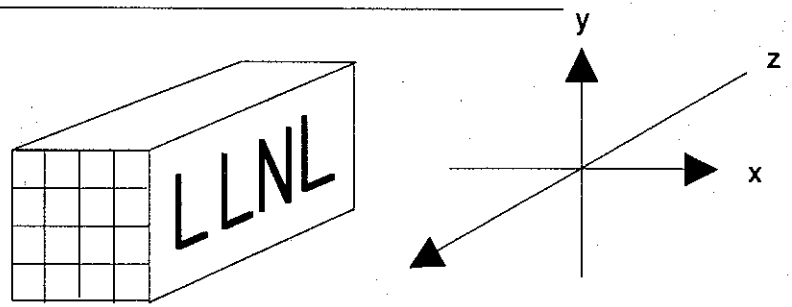

Figure 4: Slab spacing in Z direction

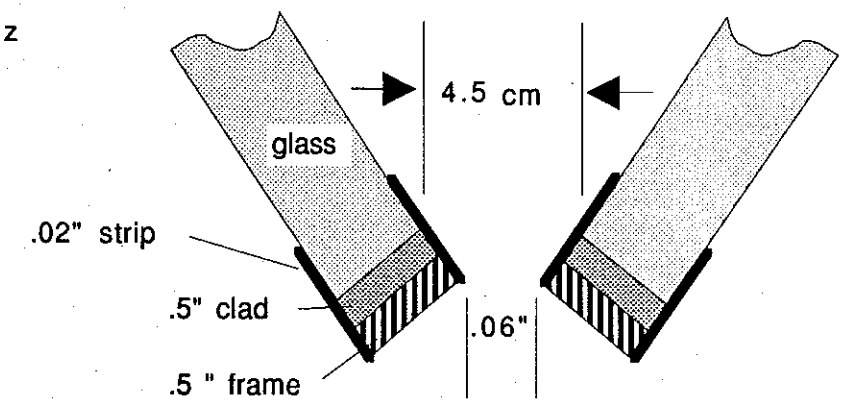

Figure 3: Aperture dimensions viewed parallel to beam

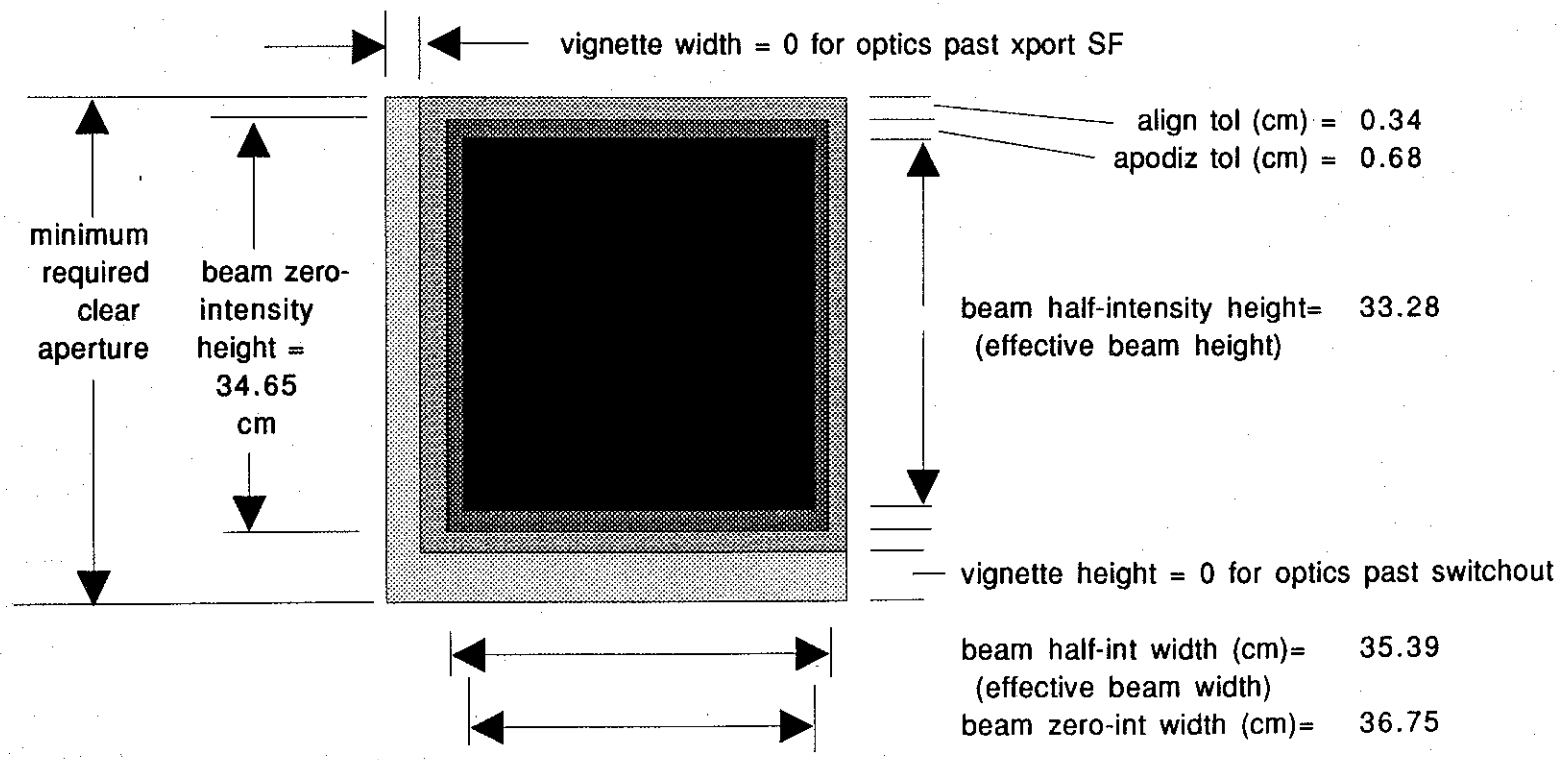

7/2/93 2:00 PM
form rev A

Figure 5: Slab spacing in X and Y directions (cm) for 2x2 amp quadrant

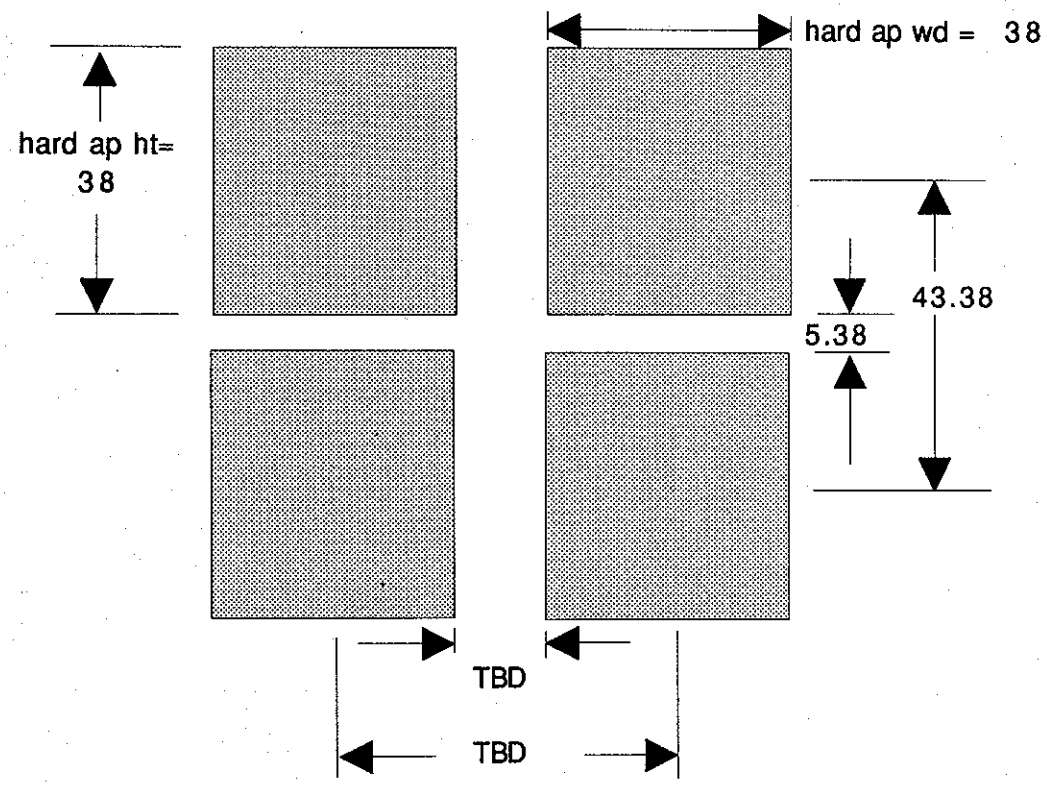

Inputs (mostly from CHAINOP output):

Design ID: Design_#4_for_LDB_Report_(1.8MJ/500TW)

Hard aperture width (cm): 38 height (cm): 38

Laser glass slab dimensions (cm):

length:	74.66	flslmp pump	360
width:	41.43	pulse (microsec)	
thickness:	3.23		

Extra width/height for holder (cm):

		Thckns (cm)	Nd3+ doping
Laser glass slabs (phosphate)	0	3.23	5.15E+20
Spatial filter lenses (SiO2)	1.671	2.6	
Final focus lenses (SiO2)	7	2.9	flshlmp pk fcn
Vacuum windows (SiO2)	2	5.05	0.544
Blast shields (SiO2)	7	1	
Pockels cell windows (SiO2)	2	3	
Polarizer (HiQ BK7)	2	9	Deut fraction
Doubler crystal (KD*P)	1	1.05	0%
Tripler crystal (KD*P)	1	0.85	60%
PC crystal (KD*P)	1	1	60%
Cavity mirrors (BK7)	2	8	
Transport mirrors (BK7)	2	8	
Elbow mirrors (BK7)	2	9	

Number of beamlets:	240.2
Main amp # slabs:	11
Switch amp # slabs:	5
Boost amp # slabs:	3
Polarizer refr indx:	1.507
Laser glass density (gm/cc):	2.83
SiO2 density (gm/cc):	2.2
HiQ BK7 density (gm/cc):	2.51
BK7 density (gm/cc):	2.51
Explosion fraction:	0.2

Main amp numeric gain:	10.09
Switch amp numeric gain:	2.773
Boost amp numeric gain:	1.804
Amps # bmlts high:	4
Amps # bmlts wide:	4

Bank energy (kJ):	1052.3
MSA equivalency:	1
Apoization border (cm):	0.682
Beam zero-int width (cm):	36.751
Beam zero-Int height (cm):	34.646
Alignment border (cm):	0.341
Pinhole width (cm):	0.728
Pinhole height (cm):	3.433
Main-side to-mirr dist (m):	8.75
Swtch-sde to-mirr dist (m):	9.078
Spatial filter length (m):	23.328
Slab axial length (cm):	64.14
Num of polarizer lgths:	4
Switch length (m):	0.5
Extra length in cav (m):	5.5
Cav comp and end sp (m):	0.6
Slab xtr lg for holders (cm):	4.5
# slabs in booster amp:	3

	Pump Eff(%):	Energy Dens(J/cc):
Main amp:	4.62%	0.293
Switch amp:	4.49%	0.284
Boost amp:	4.33%	0.274

Injection energy at 1 ns (J):	0
Injection energy at 4.8 ns:	0.5
Injection energy at 11 ns:	0
Design pulse length (ns):	4.8

Doubler (KDP) density (gm/cc):	2.35
Tripler (KD*P) density (gm/cc):	2.35
PC (80% deut KD*P) density (gm/cc):	2.35

Output pow (GW)/eng (kJ):

(fm outpt; use 0.9 xpt and 0.85 knfm below)

1w	4.08E+03	1.96E+04
3w	2.10E+03	7.49E+03

7/2/93 2:00 PM
form rev A

Run #4 for LDB report (1.8 MJ/500 TW)
LaserPrint();DamagePrint();RunThruPrint();
Parameters:

Chain injection energy (mJ):	500.0000	
Energy density (J/cc) infinite length:	0.3002	
Slab caliper thickness (cm):	3.2306	
Number of slabs in amp 1:	11.0000	
Number of slabs in amp 2:	5.0000	
Number of slabs in amp 3:	3.0000	
Amp hard aperature width (cm):	38.0000	
Amp hard aperature area (cm^2):	1444.0000	
Laser square-pulse pulsewidth (ns):	4.8000	
Laser size (total volume laser glass) (kl):	45.6182	
Amp # beamlets wide	4.0000	
Amp # beamlets high	4.0000	
Gain cross section (E-20):	3.5000	
Slab single surface transmission:	0.9950	
Slab bulk loss coefficient:	0.0500	
Relative stored energy (MSA is unity):	1.0000	
Explosion fraction in lamps (free air):	0.2000	
Extra length in cavity (m):	5.5000	
Slab extra edge (cm):	0.1000	
Slab extra edge/thickness ratio:	0.5000	
Slab extra length for holders etc. (cm):	4.5000	
Switch length (m):	0.5000	
Cavity component end & spacing (m):	0.6000	
Number of slab-equiv lengths for the polarizer:	4.0000	
Injection mirror area (cm^2):	0.5000	
Beam dump area - both parts (cm^2):	50.0000	
Apodizing fixed per-side margin (cm):	0.5000	
Apodizing multiplier of SQRT(lambda*L):	1.5000	
Alignment fixed per-side margin (cm):	0.2500	
Alignment multiplier of SQRT(lambda*L):	0.7500	
Fluence peak/avg just after pinhole:	1.4000	
Peak/avg multipler of gain term:	0.1000	
Peak/avg multipler of delta-B:	1.0000	
Per beamlet marg (k$/bmlt):	1002.0000	
Marg amps cost (k$/(bmlt-slab)):	8.3925	
Marg flashlamps cost ($/(bmlt-slab-cm):	42.7995	
Part of MOR cost ($/(bmlt-ns):	522.0000	
Part of bank ($/J):	0.1292	
Part of bank ($/(bmlt-J^.3-(slab-cm)^.7):	3.2181	
Part of spatial filter cost ($/m):	241.0000	
Laser glass bulk cost ($/cc):	1.4600	(w/o facil/pilot: .89)
Laser glass finish/clad cost ($/cm^2):	1.0867	(w/o facil/pilot: .60)
Fixed cost per beam (M$):	136.1160	
Maximum between-filter B integral:	2.2000	

Slab specs:

thickness	3.23 cm	width	74.66 cm	height	41.43 cm
covered edge	3.43 cm	volume	9.99 liters	pumped	8.74 liters
axial length	64.14 cm	module	68.64 cm	area	3093.41 cm^2/side

Amplifier specs:	Amp 1	Amp 2	Amp 3		
slab count	11.000	5.000	3.000	total	19.000
pump effiency (%)	4.624	4.489	4.329	inf length amp	4.740
energy density (J/cc)	0.293	0.284	0.274	inf length amp	0.300
gain coefficient (/m)	5.433	5.274	5.086	inf length amp	5.569
numeric gain (pumpd/un)	10.09	2.773	1.804		
unpumped transmission	0.8767	0.9420	0.9648		
stored 1w energy (J)	28169.4	12429.9	7192.3	total	47791.7
bank energy (kJ)	609.2	276.9	166.2	total	1052.3

Cavity layout:

total length of cavity (m): 46.656 length of spatial filter (m): 23.328
distance from left-side mirror to farthest slab (m): 8.750
distance from right-side mirror to farthest slab (m): 9.078

Beam geometry - vignette, alignment, apodization:

	--width--	--height-		
pinhole spacing	0.728 cm	3.433 cm		
injection mirror	0.728 cm	0.687 cm	area (cm^2):	0.50
beam dump (2 parts)	7.283 cm	6.866 cm	area (cm^2):	50.00
beam angles	0.125 mrad	0.589 mrad		
beam vig shft (left side)	0.546 cm	2.575 cm		
beam vig shft (right side)	0.567 cm	2.672 cm		
hard metal aperature	38.000 cm	38.000 cm	area (cm^2):	1444.00
beam zero-intensity	36.751 cm	34.646 cm	area (cm^2):	1273.30
beam half-intensity	35.387 cm	33.283 cm	area (cm^2):	1177.78

apodization border (all 4 sides)	0.6820 cm (to 1/2 intensity)
alignment border (all 4 sides)	0.3410 cm
fill factor from vignette	0.9158 of area
fill factor from alignment	0.9628 of area
fill factor from apodization	0.9250 of area
total fill factor (half-intensity/hard)	0.8156 of area

CHAINOP9 costs of NIF (proc,design,assembly,pilot,facilit; no develop,conting,taxes,overhead):

Total laser glass volume (laser size) (kl): 45.62

all marg per beamlet only costs; 240.2 beamlets at 1002.0 k$ per beamlet	240.73
amp mechanical at 8.392 k$ per beamlet per slab	38.31
flash lamps at 42.8 $ per beamlet per slab per cm slab length	12.53
part of MOR at 522.0 $ per beamlet per ns	0.60
bank energy; 252.81 MJ at 0.12920 $/J	32.66
bank energy at 3.2181 $ per beamlet per (J^0.3-(slab-cm)^0.7)	7.16
spatial filter at 241.0 $/m for two filters of 23.33 m	1.35
bulk laser glass: 45.62 kl at 1.46000 $/cc	66.60
finish/clad laser glass at 1.08670 $/cm^2	30.69
fixed costs for all of above	136.12

Total:	566.76 M$
(w/o optics facil/pilot:	498.9 M$)

Specs on chain elements:

Item Name	Thick (cm)	Refr Indx	Non Lin Coeff	Angle (deg)	Pasv Xmsn
las glass	3.231	1.519	2.890	56.642	0.988
SF lens	2.600	1.450	2.700	0.000	0.990
focus lens	2.900	1.450	8.100	0.000	0.990
vac window	5.050	1.450	8.100	0.000	0.990
debris shield	1.000	1.450	8.100	55.408	0.980
PC window	3.000	1.450	2.700	0.000	0.990
pol trans	9.000	1.507	2.700	56.433	0.970
pol refl	0.000	0.000	0.000	56.433	0.980
doubler cryst	1.050	1.500	2.900	0.000	0.700
tripler cryst	0.850	1.500	8.100	0.000	1.000
PC crystal	1.000	1.500	2.890	0.000	0.969
mirrors	0.000	0.000	0.000	0.000	0.990

Summary of component fluence damage:

Component	Type	Peak Flunce J/cm^2	Max Allwd J/cm^2	Peak/ max

amp1	laser glass	22.237	41.202	0.540
amp2	laser glass	23.876	41.202	0.579
amp3	laser glass	33.466	41.202	0.812
SFlenses	AR	33.466	41.202	0.812
beam dump	AR	26.864	41.202	0.652
pokl cell wind	AR	23.964	41.202	0.582
wedge	AR	0.000	41.202	0.000
small UT lens	AR	0.000	41.202	0.000
pol in refl	polR	24.644	25.615	0.962
pol in trans	polT	0.449	22.413	0.020
passive rot	polT	0.000	22.413	0.000
cav mirrors	HR	6.425	30.418	0.211
xport mirrors	HR	24.052	30.418	0.791
inj mirror	HR	3.000	30.418	0.099
small UT mirr	HR	0.000	30.418	0.000
large UT mirr	HR	0.000	30.418	0.000
pokl KD*P	KD*P w/ plasma	24.422	43.818	0.557
1st freq conv	KD*P w/ plasma	23.571	43.818	0.538
2nd freq conv	KD*P @ 3w	16.573	19.718	0.841
final foc lens	AR @ 3w	16.723	18.728	0.893
vac window	AR @ 3w	17.184	18.728	0.918
blast shield	AR @ 3w	18.728	18.728	1.000

Run-through of the laser chain:

Item Name	Energy (J)	Power (GW)	Peak (J/cm^2)	Peak/ avg.	Added B Int.	Total B Int.	Energy change	Last Ph gain	Gain ratio
Inject	0.500	0.354	3.00	3.000	.000	.000	1.000	1.0	1.00
SFLens	0.495	0.351	0.594E-03	1.400	.125E-04	.125E-04	0.990	0.99	1.00
Amp3	0.862	0.611	0.102E-02	1.400	.528E-04	.653E-04	1.741	1.7	1.00
PolRefl	0.844	0.599	0.102E-02	1.400	.000	.653E-04	0.980	1.7	1.00
BeamDump	0.169E-01	0.120E-01	0.135E-02	4.000	.000	.653E-04	1.000	1.7	1.00
PoklWind	0.836	0.593	0.100E-02	1.400	.244E-04	.898E-04	0.990	1.7	1.00
PoklKDP	0.810	0.574	0.994E-03	1.400	.854E-05	.983E-04	0.969	1.6	1.00
PoklWind	0.802	0.568	0.963E-03	1.400	.234E-04	.122E-03	0.990	1.6	1.00
Amp2	2.09	1.48	0.249E-02	1.400	.179E-03	.300E-03	2.612	4.2	1.00
SFLens	2.07	1.47	0.249E-02	1.400	.525E-04	.353E-03	0.990	4.1	1.00
Pinhole									
SFLens	2.05	1.46	0.246E-02	1.400	.520E-04	.520E-04	0.990	4.1	1.00
Amp1	18.1	12.8	0.216E-01	1.400	.216E-02	.221E-02	8.837	36.	1.00
Mirror	18.0	12.7	0.216E-01	1.400	.000	.221E-02	0.990	36.	1.00
Amp1	157.	110.	0.187	1.402	.187E-01	.209E-01	8.747	0.31E+03	1.02
SFLens	156.	109.	0.187	1.402	.390E-02	.248E-01	0.990	0.31E+03	1.02
Pinhole									
SFLens	154.	108.	0.185	1.400	.386E-02	.386E-02	0.990	0.30E+03	1.02
Amp2	396.	273.	0.472	1.404	.334E-01	.373E-01	2.570	0.77E+03	1.05
PoklWind	392.	271.	0.472	1.404	.112E-01	.484E-01	0.990	0.76E+03	1.05
PoklKDP	380.	262.	0.467	1.405	.390E-02	.523E-01	0.969	0.74E+03	1.05
PoklWind	376.	260.	0.453	1.405	.107E-01	.630E-01	0.990	0.73E+03	1.05
PolTrans	365.	252.	0.449	1.407	.251E-01	.881E-01	0.970	0.71E+03	1.05
Mirror	361.	249.	0.436	1.409	.000	.881E-01	0.990	0.70E+03	1.05
PolTrans	350.	242.	0.432	1.409	.241E-01	.112	0.970	0.68E+03	1.05
PoklWind	347.	239.	0.420	1.412	.987E-02	.122	0.990	0.68E+03	1.05
PoklKDP	336.	232.	0.416	1.413	.345E-02	.125	0.969	0.65E+03	1.05
PoklWind	332.	230.	0.403	1.413	.947E-02	.135	0.990	0.65E+03	1.05
Amp2	815.	545.	0.984	1.423	.684E-01	.203	2.450	0.15E+04	1.12
SFLens	806.	540.	0.984	1.423	.193E-01	.223	0.990	0.15E+04	1.12
Pinhole									
SFLens	798.	534.	0.959	1.400	.191E-01	.191E-01	0.990	0.15E+04	1.12
Amp1	0.511E+04	0.261E+04	6.42	1.482	.577	.596	6.398	0.74E+04	1.99
Mirror	0.506E+04	0.259E+04	6.42	1.482	.000	.596	0.990	0.73E+04	1.99
Amp1	0.129E+05	0.419E+04	22.2	2.033	1.40	1.99	2.548	0.12E+05	6.00

SFLens	0.128E+05	0.415E+04	22.2	2.033	.148	2.14	0.990	0.12E+05	6.00
Pinhole									
SFLens	0.126E+05	0.411E+04	15.2	1.400	.147	.147	0.990	0.12E+05	6.00
Amp2	0.180E+05	0.446E+04	23.9	1.559	.804	.951	1.428	0.13E+05	13.1
PoklWind	0.179E+05	0.442E+04	23.9	1.559	.182	1.13	0.990	0.12E+05	13.1
PoklKDP	0.173E+05	0.428E+04	24.4	1.611	.637E-01	1.20	0.969	0.12E+05	13.1
PoklWind	0.171E+05	0.424E+04	24.0	1.631	.175	1.37	0.990	0.12E+05	13.1
PolRefl	0.168E+05	0.415E+04	24.6	1.694	.000	1.37	0.980	0.12E+05	13.1
BeamDump	336.	83.0	26.9	4.000	.000	1.37	1.000	0.12E+05	13.1
Amp3	0.204E+05	0.425E+04	33.5	1.931	.471	1.84	1.216	0.12E+05	22.3
SFLens	0.202E+05	0.421E+04	33.5	1.931	.150	1.99	0.990	0.12E+05	22.3
Pinhole									
SFLens	0.200E+05	0.417E+04	24.0	1.400	.149	.149	0.990	0.12E+05	22.3
Xport4m	0.196E+05	0.408E+04	24.1	1.416	.000	.149	0.980	0.12E+05	22.3
Triple1	0.137E+05	0.286E+04	23.6	1.416	.527E-01	.202	0.700	0.81E+04	22.3
Triple3	0.137E+05	0.286E+04	16.6	1.422	.997E-01	.301	1.000	0.81E+04	22.3
FocusLens	0.136E+05	0.283E+04	16.7	1.435	.339	.640	0.990	0.80E+04	22.3
VacWindow	0.135E+05	0.280E+04	17.2	1.490	.584	1.22	0.990	0.79E+04	22.3
BlastShld	0.132E+05	0.275E+04	18.7	1.640	.168	1.39	0.980	0.77E+04	22.3
KForm	0.101E+05	0.210E+04	14.0	1.640	.000	1.39	0.765	0.59E+04	22.3
ngFreqCon	0.749E+04	0.210E+04	10.4	1.640	.000	1.39	0.743	0.44E+04	22.3

```
In[15]:
energy;
1.8e+06
power;
5.04e14
nBeamlets;
240.2
```

Determination of Cost Coefficients for CHAINOP

-W. Williams
x 31945

Point design around which cost scaling with aperture is determined:

Design ID: Design_#4_for_LDB_Report_(1.8MJ/500TW)

Apature (cm) width: 38 height: 38 avg: 38
Number of beamlets: 240.20

Component:	Dimensions (cm) Width	Hgt	Thick	NIF # Pcs	NIF Vol (l)	NIF Area (m2)
Laser glass slabs (phosphate)	74.66	41.43	3.23	4564	45597	2823.3
Spatial filter lenses (SiO2)	39.84	40.48	2.60	961	4029	309.9
Final focus lenses (SiO2)	44.43	42.33	2.90	240	1310	90.4
Vacuum windows (SiO2)	39.43	37.33	5.05	240	1785	70.7
Debris shields (SiO2)	44.43	69.23	1.00	240	739	147.8
Pockels cell windows (SiO2)	39.70	38.58	3.00	480	2208	147.2
Polarizer (HiQ BK7)	39.63	73.55	9.00	240	6301	140.0
Doubler cryst KDP	38.43	36.33	1.05	240	352	67.1
Tripler cryst KD*P	38.43	36.33	0.85	240	285	67.1
PC crystal KD*P	38.70	37.58	1.00	240	349	69.9
Cavity mirrors (BK7)	39.43	37.33	8.00	480	5657	70.7
Transport mirrors (BK7)	45.42	41.65	8.00	641	9694	121.2
Elbow mirrors (BK7)	39.51	65.89	9.00	240	5628	62.5

Nd3+/ cc: 5.15 e20

		KD*P test	KDP test	label
Deut:	0%	0	1	KDP
	60%	1	0	KD*P
	60%	1	0	KD*P

Total SiO2 vol (kl): 10.07
Total area of flats (m2): 3583
Total area of lenses (m2): 400
Total area of crystals (m2): 204

Optics costs for point design using scalings from J. Atherton 5/3/93 printout:

-- Proprietary information: Do not duplicate --

Cap equip/Facilities + Pilot production + Production (construction)	Bulk		Finish		Coating		Totals	
	NIF (M$)	*bmlt (k$)*	*NIF (M$)*	*bmlt (k$)*	*NIF (M$)*	*bmlt (k$)*	*NIF (M$)*	*bmlt (k$)*
Laser glass slabs (phosphate)*	67.44	280.8	30.37	126.44	0.00	0.00	97.81	407.21
Spatial filter lenses (SiO2)	7.28	30.3	5.96	24.83	1.02	4.26	14.27	59.40
Final focus lenses (SiO2)	2.37	9.9	1.74	7.24	0.29	1.22	4.40	18.32
Vacuum windows (SiO2)	3.23	13.4	1.00	4.15	0.24	0.98	4.46	18.56
Debris shields (SiO2)	1.34	5.6	2.72	11.32	0.46	1.92	4.52	18.80
Pockels cell windows (SiO2)	3.99	16.6	2.07	8.64	0.49	2.04	6.55	27.28
Polarizer (HiQ BK7)	3.15	13.1	2.28	9.47	3.08	12.84	8.51	35.43
Doubler cryst KDP	1.72	7.2	2.10	8.76	0.27	1.12	4.10	17.05
Tripler cryst KD*P	5.42	22.6	2.10	8.76	0.27	1.12	7.80	32.47
PC crystal KD*P	6.65	27.7	2.19	9.12	0.28	1.17	9.12	37.97
Cavity mirrors (BK7)	2.83	11.8	1.38	5.75	2.72	11.30	6.92	28.83
Transport mirrors (BK7)	1.45	6.1	2.37	9.85	4.22	17.56	8.04	33.47
Elbow mirrors (BK7)	0.84	3.5	1.22	5.08	2.15	8.97	4.22	17.56
Totals:	107.71	448.4	57.51	239.42	15.50	64.52	180.72	752.4

Nd3+/ cc: 5.15 e20
(Ahterton cost validity range: 2 - 5e20)

Deut: 0%
60%
60%
(Atherton cost validity range: 60-80%)

Total marg optics cost for NIF (M$): 180.72 w/o facil,pilot: 113.06
Total marg cost per beamlet (k$): 752.4 w/o facil,pilot: 470.7
Full cost (k$): 191516 (optics only; includes facil+pilot+prod+fixed costs, but not devel (see below))
Full cost (k$): 123862 (optics only; includes prod+fixed costs, but not devel,facil,pilot)
* finish cost includes edge cladding

Cap equip/Facilities	Bulk		Finish		Coating	
	NIF (M$)	bmlt (k$)	NIF (M$)	bmlt (k$)	NIF (M$)	bmlt (k$)
Laser glass slabs (phosphate)	17.63	73.39	9.08	37.79	0	0
Spatial filter lenses (SiO2)	2.31	9.61	1.72	7.17	0.186	0.78
Final focus lenses (SiO2)	0.75	3.13	0.50	2.09	0.054	0.23
Vacuum windows (SiO2)	1.02	4.26	0.47	1.96	0.042	0.18
Debris shields (SiO2)	0.42	1.76	1.29	5.37	0.089	0.37
Pockels cell windows (SiO2)	1.27	5.27	0.98	4.07	0.088	0.37
Polarizer (HiQ BK7)	0	0	1.09	4.52	0.617	2.57
Doubler cryst KDP	0.22	0.90	0.81	3.37	0.040	0.17
Tripler cryst KD*P	0.26	1.10	0.81	3.37	0.040	0.17
PC crystal KD*P	0.32	1.35	0.84	3.51	0.042	0.18
Cavity mirrors (BK7)	0	0	0.46	1.92	0.623	2.59
Transport mirrors (BK7)	0	0	0.79	3.28	1.067	4.44
Elbow mirrors (BK7)	0	0	0.41	1.69	0.551	2.29
Totals:	24.20	100.77	19.25	80.12	3.44	14.32

Pilot Production	Bulk		Finish		Coating	
	NIF (M$)	bmlt (k$)	NIF (M$)	bmlt (k$)	NIF (M$)	bmlt (k$)
	9.119	37.965	4.235	17.631	0	0
	1.305	5.435	0.465	1.935	0.115	0.480
	0.424	1.767	0.136	0.564	0.029	0.120
	0.579	2.408	0.106	0.442	0.029	0.120
	0.239	0.997	0.222	0.923	0.029	0.120
	0.715	2.978	0.221	0.919	0.058	0.240
	0	0	0.210	0.874	0.384	1.600
	0	0	0.201	0.838	0.029	0.120
	0	0	0.201	0.838	0.029	0.120
	0	0	0.210	0.873	0.029	0.120
	0	0	0.106	0.442	0.312	1.300
	0	0	0.182	0.757	0.512	2.134
	0	0	0.094	0.390	0.240	1.000
	12.38	51.55	6.59	27.43	1.80	7.47

Production (Construction)	Bulk		Finish		Coating	
	NIF (M$)	bmlt (k$)	NIF (M$)	bmlt (k$)	NIF (M$)	bmlt (k$)
Laser glass slabs (phosphate)	40.693	169.41	17.06	71.02	0	0
Spatial filter lenses (SiO2)	3.6657	15.26	3.78	15.73	0.722	3.01
Final focus lenses (SiO2)	1.192	4.96	1.10	4.58	0.210	0.88
Vacuum windows (SiO2)	1.6245	6.76	0.42	1.75	0.165	0.69
Debris shields (SiO2)	0.6722	2.80	1.21	5.03	0.344	1.43
Pockels cell windows (SiO2)	2.0085	8.36	0.88	3.65	0.343	1.43
Polarizer (HiQ BK7)	3.1507	13.12	0.98	4.08	2.0842	8.68
Doubler cryst KDP	1.5055	6.27	1.0921	4.55	0.201	0.84
Tripler cryst KD*P	5.1612	21.49	1.0921	4.55	0.201	0.84
PC crystal KD*P	6.3254	26.33	1.1377	4.74	0.209	0.87
Cavity mirrors (BK7)	2.8285	11.78	0.81	3.39	1.7802	7.41
Transport mirrors (BK7)	1.4541	6.05	1.40	5.81	2.6396	10.99
Elbow mirrors (BK7)	0.8442	3.51	0.72	3.00	1.3629	5.67
Totals:	71.13	296.11	31.68	131.87	10.26	42.72

-- Proprietary information: Do not duplicate --

Scaling Equations for CHAINOP costing:

The scaling equations from WBS items, as used in CHAINP, are broken into 9 categories:

1) fixed costs for facility, or fixed with a scaling with number of beamlets
   Most WBS items fall into this category. They are summarized in the table below.
2) flashlamps, which scale with number of beamlets. number of slabs per beamlet, and slab axial length. CHAINOP inputs of amp number beamlets high and wide and lamp packing fraction (as calculated by K. Jancaitis) are also required.
3) amplifier segments, which scale with number of beamlets and number of slabs per beamlet. CHAINOP input of amp number of beamlets high and wide are also required.
4) front end, which scales with number of beamlets and laser pulse length.
5) power conditioning system, which scales with bank energy, pumping pulse length, and energy per flashlamp.
6) spatial filters, which scale with SFlength (trivial ap scaling)
7) laser glass bulk, which scales with slab volume ($/cc)
8) laser glass finish, which scales with slab surface area ($/cm2)
9) all other optics, which scales with number of beamlets

1) Facility fixed costs, or fixed with scaling with number of beamlets.

	Procurement		Design		Assembly		
		Marg		Marg		Marg	
WBS Item	Fixed (k$)	(*Nb) (k$)	Fixed (k$)	(*Nb) (k$)	Fixed (k$)	(*Nb) (k$)	Comments
1. Project Office	13564		2000				
2. Conventional Facilities	16300				1737		assumes 60 ft extension on blg 391
3. Laser							
3.1 Front End							-- see (4) below --
3.2 Main Amp System							
3.2.1 Main Amps							
3.2.1.1 Flashlamp Assemblies							-- see (2) below --

3.2.1.3, 3.2.1.5-7 (amp mech)							-- see (3) below --
3.2.1.4 Cooling and Purge Sys							?? not yet determined
3.2.2 Spatial Filters							-- see (6) below --
3.2.3 Mirror Mounts		16.2	55.1		7.3	1.64	
3.2.4 Polarizer Assembly	216.4	7.69	310.5			4.333	
3.2.5 Pockels' Cell Assembly	725.3	83.185	2195.3		482.9	16.337	
3.2.6 Boost Amp							
3.2.6.1 Flashlamp Assemblies							-- see (2) below --
3.2.6.3, 3.2.6.5-7 (amp mech)							-- see (3) below --
3.2.6.4 Cooling and Purge Sys							?? not yet determined
3.2.7 Interstage Hdw		3.9	14.6		2.9	0.096	
3.3 Beam Xport System							
3.3.1 Spatial Filters							-- see (6) below --
3.3.2 Mirror Assembly		13.7	53.8		7.3	1.45	
3.3.3 Final Optics System		20.4	135.1		17.4	2.06	
3.3.4 Beam Tube System		7.92	29.9		5.8	0.119	
3.3.5 Interstage Hdw							-- no identifiable items here
3.4 Power Cond System							-- see (5) below --
3.5 Align and Laser Diag	657	114	7475		130	79	
3.6 Space Frame							-- see (10) below --
3.7 Laser Aux Systsems	725				1873		?? needs scaling
4. Target Area							
4.1 Chamber and Containment							
4.1.1 Walls	9477	2.63	300		6000		
4.1.2 n/gamma shield	1750		150		350		
4.1.3 Chamber Port System	65		0		0		
4.1.4 Chamber Vacuum System	1400		0		0		?? begin rechecked by Patton
4.1.5 EMI Mitigation System	200						total cost
4.1.6 Chmbr Therml Contl Sys							-- no thermal control system
4.2 Final Optics Protection							
4.2.1 Debris Shield Holders		3.25	0		0		
4.2.2 Other Protection Sys	45	7	75		550		
4.3 Target Positioning							
4.3.1 Inserter/Positioner	1350		300		1020		
4.3.2 Target Align Support Hdw	250		75		0		
4.3.3 Target Thrml Contr Hdw	450		40		0		

4.4 Target Diags	9000						total cost
4.5 Target Spaceframe	1000		1680		0		
4.6 Environ Protection System	500		150		85		
4.7 Target Area Aux Systems	2100		300		1400		
5. Intgrtd Comp Contl System	2129	16.71	3560		806	3	
totals:	61904	297	18899	0	14475	108	

total fixed (k$):	95278
total per beam (k$):	405

2) Flash lamps cost

procurement (k$):

*(400 + 2.3 Llamp)*Nlamps*.001*

where N_{lamps} = # lamps in NIF

$$= \left(N_{slabsA1} + N_{slabsA2} + N_{slabsA3}\right)\left(\frac{L_{slabaxial} F_{pack}}{2.5\ \text{cm}}\right)\left(\frac{N_B}{H_{amp} W_{amp}}\right)\left(W_{amp}\right)$$

Llmp = Hamp Hap + (Hamp - 1)Sspace = lamp length (cm)
Hap = hard aperture height (cm)
Hamp = amplifier # beamlets high (e.g. 4) (input to CHAINOP)
Wamp = amplifier # beamlet wide (e.g. 4) (input to CHAINOP)
Sspace = vertical hard ap to hard ap spacing (cm) (from Summary)
Lslabaxial = axial length of a slab (cm) (e.g. 60) (from CHAINOP)
Fpack = packing fraction of lamps (e.g. 0.544) (from Jancitis/CHAINOP)
(based on 2.5 cm ID lamps and
side cassettes having 1/2 packing fraction of central cassettes)

design (k$): 0
assembly (k$ 0 (incl in amp segments)

3) Amplifier segments cost (per beamlet for assemb; fixed for proc, design)

procurement (k$):

Ch(NslabsA1 + NslabsA2 + NslabsA3)* Nb + 882*

where

$$Ch = 8.55 + \frac{30.88}{e^{H_{amp}}} - 0.51 H_{amp} + \frac{7.77 - 1.38 H_{amp} + 0.13 H_{amp}^2}{e^{0.8 W_{amp}}} + \left(0.0001 - 0.016 H_{amp} + 0.007 H_{amp}^2 - 0.0012 H_{amp}^3 + 0.000068 H_{amp}^4\right) W_{amp}$$

(note: the $882 k fixed cost is for all amps and flashlamps, but is included here)

design cost (k$): 2370

assembly cost (k$): (0.770 /Hamp^0.7 + 0.461 / (Hamp^0.7Wamp) +
1.953 /Hamp^0.6)(NslabsA1 + NslabsA2 + NslabsA3)
(includes BAU and flash lamp cassette;
variables defined in (2) above)

4) Front end costs (k$):

regen/preamp (for one regen/preamp per beamlet):

procurement: 72.5Nb + 61 for 0 < Einj < 0.5 J
97.5Nb + 61 for 0.5 < Einj < 3 J
102.3Nb + 61 for 3 < Einj < 10 J

design: 3328

assembly: 20.87Nb

MOR:

procurement: (19.73 + 0.458taueq)Nb + 701

design: 940.90

assembly: (4.52 + 0.064taueq)Nb + 87.7

1.4185

5) Power Conditioning costs (k$):

procurement:

$$0.001\left(7.21e6 + \frac{E_{bank}}{0.85}\left(0.104 + 0.005\left(\frac{500 - S_p(\mu s)}{120}\right)\right) + 0.027 E_{bank}\left(\frac{E_{lamp}}{E_{lamp0}}\right)^{-0.7}\right)$$

where Sp is the flashlamp pump pulse duration, Elamp is (Ebank/Nlamps), and Elamp0 = 17 kJ/lamp
This is broken into three parts: one fixed and two marginal with different scalings (see below)

design: 0 (incl in procurment fixed cost)

assembly: 0 (incl in procurement)

6) Spatial filter (cavity and transport) costs (k$):

procurement (k$): 914 + 92.33*Nb*(.94 + .06(SFLength/23 m))
= 914 + 86.79*Nb + 0.241*Nb*SFLength
design (k$): 1374
assembly (k$): 21.483*Nb

7) Laser glass bulk cost ($/cc), including production, pilot, and facilitization 1.4185
8) Laser glass finishing/cladding cost ($/cm2), including production, pilot, and facilitization 1.0886
9) Cost of all optics besides laser glass (k$/beamlet), including production, pilot, and facili 293.54
Fixed facility costs associated with optics (k$) (design and misc proc) 10800
Development (pre-production) costs at vendor (not TPC dollars ?) (k$): 26550
Development (pre-production) costs at LLNL (not TPC dollars ?) (k$): 25900
10) Space Frame costs for laser (k$) (put under fixed costs):

proc (k$): 8000*(Vlasglass / 30.6 kl)^0.6
design (k$): 1680

Total cost: production,pilot,facilitization; not devel,overhead,taxes,conting

Total cost as reported in this CHAINOP run (M$): 566.76

--- this should be approximately equal to ---

This CHAINOP run is used to determine new cost coefficients below.
Total cost as detemined by these coefficients (M$): 566.56

--- and this should be approximately equal to ---

Total cost as determined from detailed cost eqns (M$): 566.56

Ditto w/o optics facil,pilot: 498.91

These detailed costs are racked up as follows:

WBS Item	Proc (k$)	Design (k$)	Assem (k$)	Total (k$)
1. Project Office	13564	2000	0	15564
2. Conventional Facilities	16300	0	1737	18037
3. Laser				
3.1 Front End	29449	4268.9	6260.2	39978
3.2 Main Amp System				103517
3.2.1 Main Amps				46056
3.2.1.1 Flashlamp Assemblies	10550	0	0	10550
3.2.1.3, 3.2.1.5-7 (amp mech)	28580	2370	4556.3	35506
3.2.1.4 Cooling and Purge Sys	???	???	???	
3.2.2 Spatial Filters	10781	275	2330.7	13386
3.2.3 Mirror Mounts	3891.2	55.1	401.23	4347.6
3.2.4 Polarizer Assembly	2063.5	310.5	1040.8	3414.8
3.2.5 Pockels' Cell Assembly	20706	2195.3	4407	27309
3.2.6 Boost Amp				8025.8
3.2.6.1 Flashlamp Assemblies	1978.2	0	0	1978.2
3.2.6.3, 3.2.6.5-7 (amp mech)	5193.3	0	854.3	6047.6
3.2.6.4 Cooling and Purge Sys	???	???	???	
3.2.7 Interstage Hdw	936.78	14.6	25.959	977.34
3.3 Beam Xport System				27473
3.3.1 Spatial Filters	12331	1099	2829.6	16259
3.3.2 Mirror Assembly	3290.7	53.8	355.59	3700.1
3.3.3 Final Optics System	4900.1	135.1	512.21	5547.4
3.3.4 Beam Tube System	1902.4	29.9	34.384	1966.7
3.3.5 Interstage Hdw	0	0	0	0

Total (M$): 566.56

WBS Item	Proc (k$)	Design (k$)	Assem (k$)	Total (k$)
3.4 Power Cond System	47031	0	0	47031
3.5 Align and Laser Diag	28040	7475	19106	54621
3.6 Space Frame	10163	1680	0	11843
3.7 Laser Aux Systsems	725	0	1873	2598
4. Target Area				43156
4.1 Chamber and Containment				20324
4.1.1 Walls	10109	300	6000	16409
4.1.2 n/gamma shield	1750	150	350	2250
4.1.3 Chamber Port System	65	0	0	65
4.1.4 Chamber Vacuum System	1400	0	0	1400
4.1.5 EMI Mitigation System	200	0	0	200
4.1.6 Chmbr Therml Contl Sys	0	0	0	0
4.2 Final Optics Protection				3132.1
4.2.1 Debris Shield Holders	780.65	0	0	780.65
4.2.2 Other Protection Sys	1726.4	75	550	2351.4
4.3 Target Positioning				3485
4.3.1 Inserter/Positioner	1350	300	1020	2670
4.3.2 Target Align Support Hdw	250	75	0	325
4.3.3 Target Thrml Contr Hdw	450	40	0	490
4.4 Target Diags	9000	0	0	9000
4.5 Target Spaceframe	1000	1680	0	2680
4.6 Environ Protection System	500	150	85	735
4.7 Target Area Aux Systems	2100	300	1400	3800
5. Intgrtd Comp Contl System	6142.7	3560	1526.6	11229
6. Optics (incl proc,pilot,facil; no devel)				191516

The above costs result in the following coefficients for CHAINOP (which should be very similar to those used in the optimization the case should be re-run with these) (all costs in k$):

		current design resulting costs (M$):
135789	1) fixed costs:	135.79
	2) marginal per beamlet (most items):	240.36
976	for 0 < Einj < 0.5 J	
1001	for 0.5 < Einj < 3 J	
1005	for 3 < Einj < 10 J	
8.39245892	3) marginal per beamlet per slab (amps):	38.30
0.04279948	4) marginal per beamlet per slab per cm (flashlamps):	12.53
0.522	5) marginal per beamlet per ns (MOR):	0.60
0.00012922	6) marginal per beamlet per J (power cond):	32.66
0.00321808	7) marginal per beamlet per J^0.3 per slab^0.7 per cm^0.7 (power cond):	7.16
0.241	8) marginal per beamlet per m (spatial filter):	1.35
1.47835065	9) marginal per cc (laser glass bulk):	67.44
0.00107573	10) marginal per cm2 (laser glass finish/clad):	30.37
	total:	566.56

data for pie chart

15.6	15.6	1. Project Office
18.0	18.0	2. Conventional Facilities
40.0	40.0	3.1 Front End
103.5	103.5	3.2 Main Amp System
27.5	27.5	3.3 Beam Xport System
47.0	47.0	3.4 Power Cond System
54.6	54.6	3.5 Align and Laser Diag
14.4	14.4	3.6/3.7 Space Frame/Aux Sys
43.2	43.2	4. Target Area
11.2	11.2	5. Intgrtd Comp Contl System
191.5	191.5	6. Optics
	566.6 *Total (M$)*	

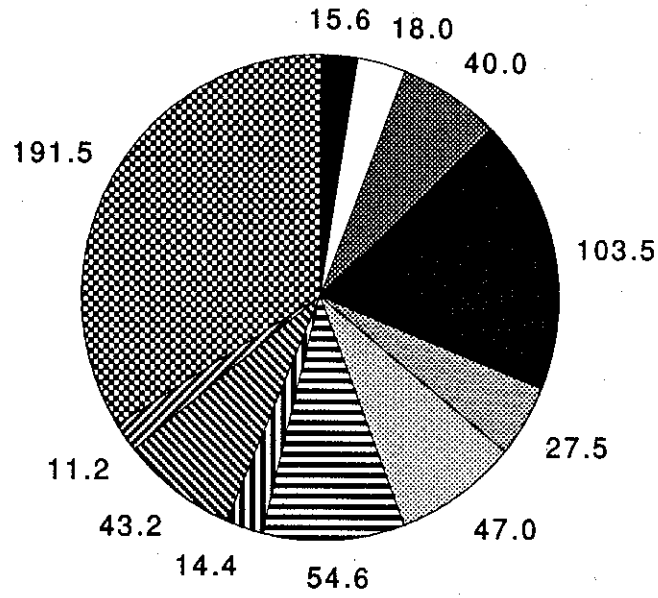

Appendix B

CHAINOP
Cost Algorithms

Detailed Cost Algorithms by WBS Element

(costs for entire facility):

N_B : number of beamlets in facility
E_{inj} : injection energy per beamlet (J)
τ_{eq} : flat-top equivalent pulse length (ns)
$V_{lasglass}$: total volume of laser glass (kL)

1. Project Office

procurement cost (k$): 13564 — Henning/
design cost (k$): 2000 — Sawicki
assembly cost (K$): 0) (included in design)

2. Conventional Facilities

procurement cost (k$): 16300 — Henning/
design cost (k$): 0 (included in assembly) — Foley
assembly cost (k$): 1737

3. Laser

3.1 Optical Pulse Generation System

regen/preamp (for one regen/preamp per beamlet):
procurement cost (k$): $72.5N_B + 61$ for $0 < E_{inj} < 0.5$ J — Karpenko
$97.5N_B + 61$ for $0.5 < E_{inj} < 3$ J — Ault
$102.3N_B + 61$ for $3 < E_{inj} < 10$ J
design cost (k$): 3328
assembly cost (k$): $20.87N_B$
MOR: — Burkhart
procurement cost (k$): $(19.73 + 0.458\tau_{eq})N_B + 691$
design cost (k$): 940.9
assembly cost (k$):$(4.52 + 0.064\tau_{eq})N_B + 87.8$

3.2 Main Amplification System

3.2.1 Main Amplifier Segments

3.2.1.1 Flash Lamp Assemblies

procurement cost (k$): — Frank

$$(400 + 2.3L_{lmp})\left(\frac{N_{slabsA1} + N_{slabsA2}}{N_{slabsA1} + N_{slabsA2} + N_{slabsA3}}\right)N_{lamps}(.001)$$

$L_{lmp} = H_{amp}H_{ap} + (H_{amp} - 1)S_{space}$ = lamp length(cm)

H_{ap} = hard aperture height (cm)

H_{amp} = amplifier # beamlets high (e.g.4) (input to CHAINOP)

N_{lamps} = # lamps in NIF

$$= \left(N_{slabsA1} + N_{slabsA2} + N_{slabsA3}\right)\left(\frac{L_{slabaxial}F_{pack}}{2.5\text{ cm}}\right)\left(\frac{N_B}{H_{amp}W_{amp}}\right)\left(W_{amp}\right)$$

W_{amp} = amplifier # beamlet wide (e.g.4) (input to CHAINOP)

S_{space} = vertical hard ap to hard ap spacing (cm) (from Summary)

$L_{slabaxial}$ = axial length of a slab (cm) (e.g. 60) (from CHAINOP)

F_{pack} = packing fraction of lamps (e.g.0.544) (from Jancitis / CHAINOP)

(based on 2.5 cm ID lamps, and side cassettes having 1/2 packing fraction of central cassettes)

design cost (k$): 0
assembly cost (k$): 0 (incl. in 3.2.1.3)

3.2.1.3, 3.2.1.5-7 (amp mechanical)

procurement cost (k$): $C_H N_B \ (N_{SlabsA1} + N_{SlabsA2}) + 882$ Frank

where C_H =

$$8.55 + \frac{30.88}{e^{H_{amp}}} - 0.51H_{amp} + \frac{7.77 - 1.38H_{amp} + 0.13H_{amp}^2}{e^{0.8W_{amp}}} +$$
$$\left(0.0001 - 0.016H_{amp} + 0.007H_{amp}^2 - 0.0012H_{amp}^3 + 0.000068H_{amp}^4\right)W_{amp}$$

= total amp hardware cost per slab (variables defined in 3.2.1.1)

design cost (k$): 2370
assembly cost (k$): $(0.770 / H_{amp}^{0.7} + 0.461 / (H_{amp}^{0.7}W_{amp}) + 1.953 / H_{amp}^{0.6})(N_{SlabsA1} + N_{SlabsA2})N_B$
(includes BAU and flash lamp cassette;
variables defined in 3.2.1.1)

3.2.1.4 Cooling and Purge System

cost : ????

3.2.2 Spatial Filters

procurement cost (k$): $180 + 44.10N_B\ (0.94 + 0.06\ (L_{SF}\ /\ 23\ \text{m}))$ Patton
design cost (k$) 275
assembly cost (k$): $9.703N_B$

3.2.3 Mirror Mounts

procurement cost (k$): $16.2N_B$ Smith
design cost (k$): 55.1
assembly cost (k$): $7.3 + 1.64N_B$

3.2.4 Polarizer Assembly

procurement cost (k$): $216.4 + 7.69N_B$ Patton
design cost (M$): 310.5
assembly cost (k$): $4.333N_B$

3.2.5 Pockels Cell Assembly

mechanical hardware: Foley
procurement cost (k$): $33.875N_B + 615.3$
design cost (k$): 697.5
assembly cost (k$): $14.546\,N_B + 482.9$

electrical hardware: Rhodes
procurement cost (k$): $49.31N_B + 110$
design cost (k$): 1497.8
assembly cost (k$): $1.791N_B$

3.2.6 Boost Amplifier Segments

3.2.6.1 Flash Lamp Assemblies

procurement cost (k$): Frank

$$(400 + 2.3L_{lmp})\left(\frac{N_{slabsA3}}{N_{slabsA1} + N_{slabsA2} + N_{slabsA3}}\right)N_{lamps}(.001)$$

where

$L_{lmp} = H_{amp}H_{ap} + (H_{amp} - 1)S_{space}$ = lamp length (cm)

H_{ap} = hard aperture height (cm)

H_{amp} = amplifier # beamlets high (e.g. 4) (input to CHAINOP)

N_{lamps} = # lamps in NIF

$$= (N_{slabsA1} + N_{slabsA2} + N_{slabsA3})\left(\frac{L_{slabaxial}F_{pack}}{2.5\text{ cm}}\right)\left(\frac{N_B}{H_{amp}W_{amp}}\right)(W_{amp})$$

W_{amp} = amplifier # beamlet wide (e.g. 4) (input to CHAINOP)

S_{space} = vertical hard ap to hard ap spacing (cm) (from Summary)

$L_{slabaxial}$ = axial length of a slab (cm) (e.g. 60) (from CHAINOP)

F_{pack} = packing fraction of lamps (e.g.0. 544) (from Jancitis / CHAINOP)

(based on 2.5 cm ID lamps, and side cassettes having 1/2 packing fraction of central cassettes)

design cost (k$): 0
assembly cost (k$): 0 (incl. in 3.2.1.3)

3.2.6.3, 3.2.6.5-7 (amp mechanical)

procurement cost (k$): $C_H N_B$ $(N_{SlabsA3})$ Frank

where C_H =

$$8.55 + \frac{30.88}{e^{H_{amp}}} - 0.51H_{amp} + \frac{7.77 - 1.38H_{amp} + 0.13H_{amp}^2}{e^{0.8W_{amp}}} +$$

$$\left(0.0001 - 0.016H_{amp} + 0.007H_{amp}^2 - 0.0012H_{amp}^3 + 0.000068H_{amp}^4\right)W_{amp}$$

= total amp hardware cost per slab (variables defined in 3.2.6.1)

design cost (k$): 0 (included in 3.2.1 amps above)
assembly cost (k$): $(0.770 / H_{amp}^{0.7} + 0.461 / (H_{amp}^{0.7}W_{amp}) + 1.953 / H_{amp}^{0.6})(N_{SlabsA3})N_B$
(includes BAU and flash lamp cassette; variables defined in 3.2.6.1)

3.2.6.4 Cooling and Purge System

cost : ????

3.2.7 Interstage Hardware

(for 4 x 4 amps)
procurement cost (k$): 62.4 BLN (# beamlines) Smith
$= 3.9N_B$
design cost (k$): 14.6
assembly cost (k$): $2.9 + 0.096N_B$

3.3 Beam Transport System

3.3.1 Spatial Filters

procurement cost (k$): $734 + 48.23N_B\ (0.94 + 0.06\ (L_{SF}\ /\ 23\ \text{m}))$ Patton
design cost (k$): 1099
assembly cost (k$): $11.78N_B$

3.3.2 Mirror Assemblies

procurement cost (k$): $13.7N_B$ Smith
design cost (k$): 53.8
assembly cost (k$): $7.3 + 1.45N_B$

3.3.3 Final Optics System

procurement cost (k$): $20.4N_B$ Smith
design cost (k$): 135.1
assembly cost (k$): $17.4 + 2.06N_B$

3.3.4 Beam Tube System

procurement cost (k$): $7.92N_B$ Smith
design cost (k$): 29.9
assembly cost (k$): $5.8 + 0.119N_B$

3.3.5 Interstage Hardware

-- no identifiable interstage hardware in transport section:
Smith
incompatible w/ beamtubes in 3.3.4 --

3.4 Power Conditioning System

procurement cost (k$): Larson

$$0.001\left(7.21e6+\frac{E_{bank}}{0.85}\left(0.104+0.005\left(\frac{500-S_p(\mu s)}{120}\right)\right)+0.027E_{bank}\left(\frac{E_{lamp}}{E_{lamp0}}\right)^{-0.7}\right)$$

where S_p is the flashlamp pump pulse duration
E_{lamp} = bank energy per lamp = E_{bank}/N_{lamps}
(N_{lamps} defined in 3.2.1.1)
and E_{lamp0} = 17 kJ/lamp
0.85 is the bank-to-lamps transfer efficiency

assembly cost (k$): 0 (in procurement)
design cost (k$): 0 (included in procurement fixed cost)

3.5 Alignment and Laser Diagnostic Systems

procurement cost (k$): 657 + 114$N_B$ Vann/
assembly cost (k$): 130 + 97$N_B$ Bliss
design cost (k$): 7475

3.6 Laser and Beam Transport Structural Support System

procurement cost (k$): 8000 ($V$ / 30.6 kl)$^{0.6}$ Hurley
assembly cost (k$): 0 (included in procurement)
design cost (k$): 1680

3.7 Laser Auxiliary System

procurement cost (k$): 725 Sawicki
assembly cost (k$): 1873 (needs scaling)
design cost (k$): 0

4. Target Area

4.1 Target Chamber and Containment

4.1.1 Walls

(includes optics tubes on chamber)
procurement cost (k$): 2.63$N_B$ + 9477 Smith
design cost (k$): 300
assembly cost (K$): 6000

4.1.2 Neutron/Gamma Ray Shield

procurement cost (k$): 1750 — Tobin
design cost (k$): 150
assembly cost (k$): 350

4.1.3 Chamber Port System

(optics tubes under 4.1.1)
procurement cost (k$): 65 — Smith
design cost (k$): 0
assembly cost (k$): 0 (under 4.1.1)

4.1.4 Chamber Vacuum System

procurement cost (k$): 1400 — Tobin
design cost (k$): 0 (in procurement above ??)
assembly cost (k$): 0 (in procurement above ??)

4.1.5 EMI Mitigation System

total cost (k$): 200 — Tobin

4.1.6 Chamber Thermal Control System

- no thermal control system in chamber: 0 cost — Tobin/
(e.g. no frosty walls) — Smith

4.2 Final Optics Protection

4.2.1 Debris Shield Holders

procurement cost (k$): 3.25 N_B — Smith
design cost (k$): 0 (included under 3.3.3)
assembly cost (k$): 0 (included under 3.3.3)

4.2.2 Other Protection Systems

(debris shield scrubbers)
procurement cost (k$): $7N_B + 45$ — Smith
design cost (k$): 75
assembly cost (k$): 550 (~ half of 1105)

4.3 Target Emplacement and Positioning/Alignment System

4.3.1 Inserter/Positioner

procurement cost (k$): 1350 — Smith
design labor (k$): 300
assembly labor (k$): 1020

4.3.2 Target Alignment Support Hardware

procurement cost (k$): 250 — Smith
design labor (k$): 75
assembly labor (k$): 0 (included in 4.3.1)

4.3.3 Target Thermal Control Support Hardware

procurement cost (k$): 450 — Smith
design labor (k$): 40
assembly labor (k$): 0 (included in 4.3.1)

4.4 Target Diagnostics - Phase I

4.4.1 Optical Detection System

total cost (k$): 500 — Tobin/Cambell

4.4.2 X-Ray Detection System

total cost (k$): 3300 — Tobin/Cambell

4.4.3 Neutron Detection System

total cost (k$): 400 — Tobin/Cambell

4.4.4 γ-Ray Detection System

- no γ-ray detection system: 0 cost — Tobin/Cambell

4.4.5 Backlighting Diagnostic System

total cost (k$): 0 (likely include in Operations) — Smith

4.4.6 Central Diagnostic Vacuum System

total cost (k$): 700 — Tobin/ Patton

4.4.7 Data Acquisition System

total cost (k$): 4000 — Tobin/ Cambell

4.4.8 Target-Diagnostic Timing-Fiducial Laser System.

total cost (k$): 100 — Tobin/ Cambell

4.4.9 EMI Protection System for Target Diagnostics

total cost (k$): 0 — Tobin/ Cambell

4.5 Target Area Structural Support System

procurement cost (k$): 1000
design cost (k$): 1680
assembly cost (k$): 0 (included in procurement)

Hurley (needs scaling)

4.6 Environmental Protection System

procurement cost (k$): 500
design cost (k$): 150
assembly cost (k$): 85

Smith

4.7 Target Area Auxiliary Systems

procurement cost (k$): 2100
design cost (k$): 300
assembly cost (k$): 1400

Smith

5. Integrated Computer Control System

procurement cost (k$): $2129 + 16.71N_B$
design cost (k$): 3560
assembly cost (k$): $806 + 3.0N_B$

Van Arsdall

6. Optical Components

Atherton

-- 5/3/93 printouts by Atherton --

Appendix C

Optics Tables

Table 15.3 Specifications of the large optics blank for the NIF

Component	Blank Dimension in mm (approximate)	Material	Attenuation Coefficient	Birefrin-gence	ΔN	Wave Front Distortion	Gradient per cm	Bulk Damage Threshold	Surface Damage Threshold
Laser slab	695 x 388 x 36	LG-750	≤ .0015/cm	≤ 5 nm/cm		λ/7	λ/55	≥30J/cm²@1ns	≥20J/cm²@1ns
Cladding glass	800 x 50 x 14	LG-750 Cu doped	N/A	≤ 20 nm/cm	N/A	N/A	N/A	N/A	N/A
Switch windows	387 x 387 x 40	F/S	≤ .0015/cm	≤ 10 nm/cm	$\pm 1 \times 10^{-6}$	λ/15	λ/35	≥30J/cm²@1ns	≥20J/cm²@1ns
Spatial filter lens	372 x 378 x 40	F/S	≤ .0015/cm	≤ 10 nm/cm	$\pm 1 \times 10^{-6}$	λ/15	λ/35	≥30J/cm²@1ns	≥20J/cm²@1ns
Beam splitters	TBD	F/S	≤ .0015/cm	≤ 10 nm/cm	$\pm 1 \times 10^{-6}$	λ/15	λ/35	≥30J/cm²@1ns	≥20J/cm²@1ns
Reflection polarizer	366 x 667 x 94	BK-7	≤ .0015/cm	≤ 6 nm/cm	$\pm 1 \times 10^{-6}$	λ/15	λ/35	≥3J/cm²@3ns	≥30J/cm²@3ns
Transmission polarizer	TBD	F/S	≤ .0015/cm	≤ 10 nm/cm	$\pm 1 \times 10^{-6}$	λ/15	λ/35	≥30J/cm²@1ns	≥20J/cm²@1ns
Cavity mirror (leaky)	364 x 343 x 84	BK-7	≤ .0015/cm	≤ 6 nm/cm	$\pm 1 \times 10^{-6}$	λ/15	λ/35	≥3J/cm²@3ns	≥30J/cm²@3ns
Cavity mirror (HR)	364 x 343 x 84	BK-7	≤ .0015/cm	≤ 6 nm/cm	$\pm 1 \times 10^{-4}$	N/A	N/A	≥3J/cm²@3ns	≥30J/cm²@3ns
Transport mirror	419 x 384 x 84	BK-7	≤ .0015/cm	≤ 6 nm/cm	$\pm 2 \times 10^{-6}$	λ/10	λ/25	≥3J/cm²@3ns	≥30J/cm²@3ns
Alignment lens	TBD	BK-7	≤ .0015/cm	≤ 6 nm/cm	$\pm 2 \times 10^{-6}$	λ/10	λ/25	≥3J/cm²@3ns	≥30J/cm²@3ns
Conversion Xtals	358 x 337 x 8 to 10.5	KDP/KD*P	≤ .060/cm	≤ 4 nm/cm		λ/8	λ/10	≥40J/cm²@10ns	≥40J/cm²@10ns
Switch Xtals	357 x 345 10	KDP/KD*P	≤ .060/cm	≤ 4 nm/cm		λ/8	λ/10	≥40J/cm²@10ns	≥40J/cm²@10ns
Elbow mirror	365 x 591 x 94	BK-7	≤ .0015/cm	≤ 6 nm/cm	$\pm 1 \times 10^{-4}$	N/A	N/A	≥3J/cm²@3ns	≥30J/cm²@3ns
Debris shield	414 x 393 x 12	F/S	≤ .0015/cm	≤ 10 nm/cm	$\pm 2.5 \times 10^{-6}$	λ/10	N/A	≥30J/cm²@1ns	≥20J/cm²@1ns
Focus lens	414 x 393 x 33	F/S	≤ .0015/cm	≤ 10 nm/cm	$\pm 1 \times 10^{-6}$	λ/15	λ/35	≥30J/cm²@1ns	≥20J/cm²@1ns
Vacuum Window	364 x 343 x 54.5	F/S	≤ .0015/cm	≤ 10 nm/cm	$\pm 1 \times 10^{-6}$	λ/15	λ/35	≥30J/cm²@1ns	≥20J/cm²@1ns

Table 15.4 Specifications of the large finished optics for the NIF

Component	Finished Dimensions	Wave Front in Reflection	Wave Front in Transmission	Gradient	Angle of use (approximate)	Coating Specifications
Laser Slab	691 x 384 x 32	N/A	λ/6	λ/30 cm^{-1}	56.66°	N/A
Cladding glass	N/A	N/A	N/A	N/A	N/A	N/A
Switch windows	387 x 375 x 36	N/A	λ/8	λ/15 cm^{-1}	0°	Sol Gel
Spatial filter lens	372 x 378 x 36	N/A	λ/10	λ/25 cm^{-1}	0°	Sol Gel
Beam Splitters	To be determined					
Reflection Polarizer	366 x 667 x 90	λ/12	λ/12	λ/30 cm^{-1}	56.43°	See attached notes marked polarizers
Transmission polarizer	TBD	N/A	λ/12	λ/30 cm^{-1}	55.42°	See attached notes marked polarizers
Cavity mirror (leaky)	364 x 343 x 80	λ/8	λ/4	λ/35 cm^{-1}	0°	See attached notes marked mirrors
Cavity mirror (HR)	364 x 343 x 80	λ/8	N/A	λ/35 cm^{-1}	0°	See attached notes marked mirrors
Transport mirror (ave.)	419 x 384 x 80	λ/8	N/A	λ/35 cm^{-1}	45°	See attached notes marked mirrors
Alignment lens	To be determined					Sol Gel
Conversion Crystals	354 x 333 x 8 to 10.5	N/A	λ/4	λ/4 cm^{-1}	0°	Sol Gel
Switch Crystals	357 x 345 x 10	N/A	λ/4	λ/4 cm^{-1}	0°	Sol Gel
Elbow mirror	365 x 591 x 90	λ/12	N/A	λ/30 cm^{-1}	45°	See attached notes marked mirrors
Debris shield	414 x 393 x 10	N/A	λ/2	λ/15 cm^{-1}	0°	Sol Gel
Focus lens	414 x 393 x 29	N/A	λ/10	λ/15 cm^{-1}	0°	Sol Gel
Vacuum Window	364 x 343 x 5 to 50.5	N/A	λ/8	λ/15 cm^{-1}	0°	Sol Gel

Table 15.5 Comparison of Beamlet production costs and NIF projected production costs

	Beamlet*				NIF cost projection			
	Cost per Beamlet	Material cost ($/cm^3)	Finishing cost ($/m^2)	Coating cost ($/m^2)	Cost per Beamlet	Material cost ($/cm^3)	Finishing cost ($/m^2)	Coating cost ($/m^2)
Amplifiers	$745K	2.97	14200	—	$214K	0.91	6600	—
Cav. Sp. Filter	54	1.57	33200**		16	1.00	8000	2400
Cavity HR	46	0.55	15000**	54300**	20	0.50	12600	25800
Pockels KD*P	68	40.20	47800		28	18.24	18000	3100
Pockels windows	26	1.87	21000		16	1.00	6500	2400
Polarizer	42	0.54	13600	33200	22	0.50	7700	31600
Trans.Sp. Filter	54	1.57	33200**		16	1.00	8000	2400
Trans. HR (x2.7)	40	0.17	16600		21	0.15	12600	23700
KDP doubler	45	15.50	47800		11	4.85	18000	700
KD*P tripler	68	40.20	47800		23	18.24	18000	800
Focus lens	—	—	—		8	1.00	8000	2400
Debris shield	—	—	—		5	1.00	9000	2400
Vac. window	—	—	—		9	1.00	6500	2400
Elbow HR	42	0.54	13600	33200	13	0.15	12600	23900
Total	$1,230K				$422K			

*Does not include spares

**Round optics. Cost based on clear aperture

Appendix D

Laser Document File Log

	To:	From:	Date:	Title:	Ref. #
1.0 Project Office					
	File	J.T. Hunt	7/15/93	Comments on Nova Bridge Facility Strategy	
1.1 Project Management					
	Dist	RS & JTH	3/23/93	National Ignition Facility (NIF) Design Basis Strategy	LDB Mtg notes
	Dist		3/29/93	Development of the NIF laser design basks	LDB Mtg notes
	Dist	EMC	4/6/93	National Ignition Facility Project Leadership	93-281
	Dist	LDB Mtg VGs	4/8/93	Agenda - LDB Meeting 4/8/93	
		VGs	5/1/93	NIF/CDR organization possibilities	
	LDB Task Leaders	Hunt, Sawicki	7/20/93	Completion of LDB Study	L-15950-1
1.1.1 DOE Interfaces					
	Dist	Paisner	7/15/93	Interlaboratory Memorandum of Agreement with Respect to NIF Activities	NIF-LLNL-93-035, L-15897-1
1.1.2 Organization and Responsibilities					
	Henning & Lowdermilk	W. Simmons	5/9/93	Remarks: Nova Upgrade Selection Meeting of 4/1/93	
	Dist	Hunt, Sawicki, Post	7/13/93	Chapter authors for the Laser Design and Cost Basis Study Report	
1.1.3 Configuration Management & Control Board					
	LDB Task Leaders	R. Sawicki	4/27/93	Change control of the LDB baseline laser configuration	L-15683-1
	LDB Task Leaders	R. Sawicki	5/21/93	Configuration Change Request #1 Approval	L-15753-1
	LDB Task Leaders	R. Sawicki	6/14/93	LDB Action Item Status 6/14/93	L-15821-1
1.1.4 Systems Engineering					
	Dist	Henning	7/27/93	Generic NIF Building Concepts	NIF-LLNL-93-041, L-15941-1
1.2 Project control					
	NIF/NU Estimators	Henning	12/18/92	Updated Cost Estimate for the Ignition Faclity	Rev. 1 - New Trenholme Code
	JTH	Henning	1/13/93	Cost Allocation for the Amplifier and Beam Transport	
	LDB Task Ldrs	JTH & RS	4/6/93	Laser Design Basis QA File	LS&T 93-009
	Dist	J. Post	4/13/93	Account Structure for 90-Day Study	
	Dist	JTH	4/15/93	Cost Estimate Worksheet	L-15648-1

	To:	From:	Date:	Title:	Ref. #
	Patterson/Paisner/Lowdermilk/Henning	R. Sawicki	4/29/93	Proposed WBS changes for LDB study	L-15687-1
	LDB Task Leaders	Sawicki	6/9/93	LCB Cost Review (meeting notice)	L-15803-1
	Hunt, Sawicki	Simmons	6/11/93	LDF Interim Review Comments (stream of consciousness) -- copy in 1.4	
	Dist	R. Sawicki	6/21/93	LDB Cost Review Vu Graphs	
	LDB QA File	R. Sawicki	7/2/93	Preliminary Component Development Cost Estimates	L-15869-1
	LDB QA File	R. Sawicki	7/2/93	NIF Cost Status Report	L-15870-1
	Marshal Sluyter	LLNL, LLE, LANL, SNL	8/5/93	Primary mission of the NIF	93-481
1.2.1 Work Breakdown Structure (WBS)					
	Dist	Henning	7/27/93	WBS Revision for NIF	NIF-LLNL-93-042, L-15952-1
	Dist	Henning	8/17/93	Further revised WBS for NIF	NIF-LLNL-93-084, L-16059-1
1.2.2 Cost & Schedule Control System (CSCS)					
	LDB Task Leaders	R. Sawicki	4/30/93	Labor rates for LDB study	L-15698-1, NIF-93-005
1.2.2.3 Costs, Manpower, and Contingency					
	Dist	John Post	5/11/93	Projected Incremental Overhead Rates for the NIF Project	NIF-LLNL-93-014 L-15730-1
	S. Patterson	John Post	5/21/93	LLNL NIF CDR Cost Summary, April 1993	NIF-LLNL-93-020 L-15750-1
	S. Patterson	John Post	6/9/93	NIF WBS dated April 27, 1993	NIF-LLNL-93-025 L-15800-1
	Ken Zahora	John Post	7/9/93	Monthly Status Report for May	NIF-LLNL-93-033 L-15882-1
1.3 Assurances					
			4/1/92	Nova Upgrade Preconstruction Activities - LLNL ICF Program	83 pages
	LDB Task Ldrs	JTH & RS	4/6/93	Laser Design Basis QA File (w/note from EMC on front)	LS&T 93-009
1.4 Systems analysis					
	J. Holzrichter	Trenholme	10/1/81	Multipass Systems	R&D #81-51
	Dist	L. Pleasance	6/17/83	Zeus Project Status	ZLP 83-058
	Dist	G.J. Suski	7/31/85	Nova As-Built Cost Analysis	NOVA 85-039
	Laser Designers	JBT, JTH, JRM	7/3/91	Assumptions which produced the Upgrade design	LS&T 91-65
	John Hunt	Ken Manes	4/21/92	Prism Equations	filed in 6.0

	To:	From:	Date:	Title:	Ref. #
	Those who are interested	Manes, Eimerl	4/27/92	Non-collinear phase matched tripling for the Nova Upgrade	filed in 6.0
	JC, DE, JAP, & HP	J.T. Hunt	5/18/92	Attached memo 8-4/27/92-1: First Pass Through the "Physics Design" of the NU Laser System (filed in 6.0)	JTH:lhs:9-5/18/92-1
	EMC, JL, JAP	JTH,SH,KRM, JBT,JRM	7/6/92	A critical analysis of Nova Upgrade Laser Design	JTH:lhs:9-7/6/92-1
		JTH	7/31/92	VGs on frequency-tripled pulse	JTH-7/31/92
	Dist	Hunt, Manes, Renard	8/14/92	Pulse Shaping and Pulse Stacking Considerations	
			9/16/92	Steve Haan Scalings for Nova Upgrade Targets	
	EMC	KRM,JTH,JBT ,JRM,ST	10/9/92	Confidence level of ignition versus cost scaling	JTH:lhs:10-10/9/92-1
	JTH & other Laser Aficionados	Trenholme	10/12/92	Effect of First-to-Last Photon Gain Ratio Constraint on Laser Performance	LS&T 92-091
		Trenholme	1/7/93	CHAINOP9.C	
	Dick Berger	Ken Manes	1/8/93	Beam Smoothing for NIF (filed in 6.8)	
	JTH	C.D. Henning	1/13/93	Cost Allocation for the Amplifier and Beam Transport	(w/changes)
	Dist	D. Eimerl	2/19/93	FM and AM bandwidth for the NIF	
	E.M. Campbell	J.R. Murray	2/22/93	Your request for comment on the "U-Turn" configuration proposed, in various versions, by Novarro and Vann	M30222-1
	B. Grant Logan	J.A. Paisner	2/25/93	Learning Curve Values for ICF Laser Drivers Built at LLNL	LS&T 93-013
	File	DNF,JTH,JRM ,JBT	3/22/93	Power and energy curves for the Beamlet and NIF Beamlet	JTH:lhs:12-3/22/93-1
	VGs	RS & JTH	3/23/93	National Ignition Facility (NIF) Design Basis Strategy	3-23-93/93-005 RS:tms
	JAP,JTH,WHL ,CDH	D.N. Frank	3/29/93	A directed effort for the NIF	
	JAP, JTH, WHL, CDH	N. Frank	3/29/93	A directed effort for the NIF	
	Lindl, Paisner	E.M. Campbell	3/29/93	Baseline Beam Smoothing on the NIF (Indirect Drive) -- filed in 3.1 & 6.8	93-267
	VG	Trenholme	3/31/93	Baseline Cost Distribution - 35 cm x 35 cm Aperture	
	LDB Taks Ldrs	JTH & RS	4/6/93	Rules for NIF Cost Scaling Parameters	LS&T 93-008
	J. Paisner	D. Eimerl	4/14/93	Coherence Control for the NIF/Nova Upgrade Laser 90-Day Study (copy in 3.1 & 6.8)	
	File	Hunt & Williams	5/4/93	CHAINOP's design rule for optical damage limits	L-15744-1
	Henning & Lowdermilk	Bill Simmons	5/9/93	Remarks: Nova Upgrade Selection Meeting of 4/1/93	
	File	Hunt & Renard	5/18/93	Nova and the "Bridge Facility"--a performance comparison	L-15752-1

	To:	From:	Date:	Title:	Ref. #
	File	Hunt & Williams	5/19/93	Follow-up to memo L-15744-1, "CHAINOP's design rule for optical damage limits," same authors	L-15763-1
	File	Hunt, Manes	5/28/93	Flowdown of NIF laser requirements	JTH:lhs:12-5/25/93-1 L-15762-1
	Hunt, Sawicki	Simmons	6/11/93	LDF Interim Review Comments (stream of consciousness) -- copy in 1.2	
	NIF QA File	Manes, Haan	6/15/93	NIF beam pointing specifications	
	File	Hunt, Renard	6/15/93	Modeling the dynamic range of NIF's frequency tripler	JTH:lhs:12-6/16/93-1
	Dist	Ray Smith	7/7/93	Deflection and stress analysis for Type I and Type II KDP conversion crystals for the NIF	
	File	Hunt, Renard	7/16/93	Incorporation of damage thresholds in Btgain for shaped pulses	L-15949-1
	Hunt, Williams	Sawicki	7/16/93	Optic Thickness Requirements	L-15907-1
	Manes, Hunt, Lindl, Rosen, et al.	Haan	7/29/93	Revised figure-of-merit for NIF target systematics	
		R. Speck	8/1/93	Notes on U-Turn system	
			8/2/93	NIF Functional Requirements (Rev.0) -- Draft	NIF-LLNL-93-058 L-15982-1
	John Hunt	Ken Manes	8/3/93	Ignition energy	
	Lowdermilk	Trenholme	12/7/92	The French 4-pass laser	
1.4.2 Technical Risk Assessment					
	J.I. Davis	EMC & G.Logan	12/11/92	ICF Scenario Evaluation	92-484a
	JTH & JR Murray	R. Sacks	4/26/93	SRS and SBS constraints on NIF (copy in 3.1.2 and 3.3.3.2)	
	JTH & JR Murray	R. Sacks	4/29/93	SBS Suppression on NIF (2) (copy in 3.1.2 and 3.3.3.2)	
1.5 Systems integration					
	LLNL ICF Program		7/1/92	Nova Upgrade-A Proposed ICF Facility to Demonstrate Ignition and Gain	UCRL-LR-106736 Rev.1
		JTH	3/1/93	Manpower breakdowns for the NIF	JTH:lhs-1/19/93.a
	LDB Task Ldrs	R.S. & JTH	4/26/93	LDB Meeting Notes for April 22, 1993	L-15668-1
	Dist	JTH	5/3/93	Change of format for the LDB meeting on May 10 and 11	L-15697-1, NIF-93-007
	LDB Task Leaders	R. Sawicki	5/4/93	LDB Meeting Notes for April 29, 1993	L-15700-1, NIF-93-008
	LDB Task Leaders	R. Sawicki	5/13/93	Vugraphs for the LDB meeting held on May 10 & 11, 1993	L-15736-1 NIF-93-016
	LDB Task Leaders	R. Sawicki	5/14/93	Open action item list	L-15737-1 NIF-93-015

	To:	From:	Date:	Title:	Ref. #
	LDB Task Leaders	R. Sawicki	5/21/93	LDB activity schedule	L-15754-1, NIF-93-022
	LDB Task Leaders	R. Sawicki	5/26/93	LDB Design Review	L-15767-1
	LDB Task Leaders	J. Hunt	6/7/93	NIF 90-Day Study Briefing [held 6/11/93]	
	LDB Task Leaders	R. Sawicki	6/9/93	LDB Final Report	L-15804-1
	LDB Task Leaders	R. Sawicki	6/10/93	Vugraphs for the LDB meeting held on June 3, 1993	L-15816-1
	LDB Task Leaders	R. Sawicki	6/14/93	LDB action item status 6/14/93	L-15821-1
	LDB Task Leaders	R. Sawicki	7/9/93	Closeout of LDB action items	L-15884-1
1.5.1 Technical Integration Control					
	LDB Task Leaders	R. Sawicki	5/25/93	Laser design requirements template	L-15756-1
	NIF 90-Day Study File	J.R. Murray	6/1/93	Beam divergence budget (preliminary) with digressions on frequency conversion	M30526-1
1.5.1.1 System Requirements (SRs) & Performance Criteria					
	Dist	Wade Williams	5/3/93	NIF Configuration Summary for NIF Laser Design #1	
2.0 Conventional facilities					
	Dist	Henning	7/27/93	Generic NIF Building Concepts	NIF-LLNL-93-041, L-15941-1
	Dist	Sawicki, Foley	8/10/93	NIF Laser/Target Building Cost	L-16023-1
3.0 Lasers					
	Dist	J. Auerbach	3/1/93	Modeling of Effects of Amplifier Slab Non-Uniform Gain and Pump-Induced Aberrations on Laser Pulse Propagation in Beamlet	LS&T 93-003
	Dist	K. Manes	3/29/93	Parasitics in NIF	
	J.T. Hunt	E.M. Campbell		Comments on Eimerl's memo on beam smoothing (copy in 6.0)	
	VGs	N. Frank	4/15/93	Laser Cavity Design Issues	
3.1 Optical pulse generation					
	KJ, AE, JT, J.Miller	KRM & JTH	11/20/91	Zigzag Amplifier Test Plan	JRH:lhs:7-10/18/91-1
	John Hunt	Ken Jancaitis	1/13/92	Quick Estimate for the Expected Energy Storage Performance in the Large Zig-Zag Slab Laser	LS&T 92-8
	Dist	S. Haan	7/28/92	Pulse shapes for the Nova Upgrade	
	Dist	Hunt, Manes, Renard	8/14/92	Pulse Shaping and Pulse Stacking Considerations (filed in 1.4)	

	To:	From:	Date:	Title:	Ref. #
	KRM,JTH,DE, JL,MR,SP,Suter, Berger, Woodworth	S. Haan	10/4/92	Figure-of-merit for upgrade target systematics	
		VanWontergfhem et al.	1/1/93	A Compact and Versatile Pulse Generation and Shaping Subsystem for High Energy Laser Systems	UCRL-JD-111452
	Dick Berger	Ken Manes	1/8/93	Beam Smoothing for NIF (filed in 6.8)	
	Trenholme	Eimerl & Milam	2/1/93	"Quickie" derivation of the nonlinear phases in zig-zag amplifiers	
		Hector Baldis	2/22/93	Laser-Plasma Instabilities and Coherence Control	JDM-APS92
	Lindl & Paisner	E.M. Campbell	3/29/93	Baseline Beam Smoothing on the NIF (Indirect Drive)	93-267
	Bob Nelson	Ken Manes	3/29/93	Next OSL experiments	
	File	JTH	4/8/93	Direct Drive Pulse Shape-Rochester Version	L-15636-1
			4/9/93	Combined pulse stuff - 200:1 contrast ratio	
	File	JTH	4/13/93	New NIF Pulse Shapes from S. Haan	L-15635-1
	J. Paisner	D. Eimerl	4/14/93	Coherence Control for the NIF/Nova Upgrade Laser 90-Day Study (copy)	
	Dist	K. Jancaitis	4/28/93	Decrease in the baseline NIF laser performance caused by propagating "off-center" wavelengths (copy in 3.2)	LT-011
	Dist	K. Jancaitis	5/3/93	Change in the pulse-shaping requirements for the baseline NIF front end caused by operating the amplifier chain off line center (copy in 3.2)	
	J.T. Hunt	K. Manes	5/12/93	Note re: Karpenko charts and front-end costing	
	Earl Ault	Ken Manes	5/25/93	ASE power and its effect on input pulse shape specifications	
		V. Karpenko	8/3/93	Front end activation schedule	flow chart
				Idealized Pulse Shapes for NIF Study	
3.1.1 Multifrequency Master Oscillator (MOR)					
	Dist	Ault & Murray	5/24/93		L-15766-1
	NIF LDBQA File	Ault & Burkhart	6/8/93	Completion of Action Item 9	L-15815-1
3.1.2 Modulators					
	JTH & JR Murray	R. Sacks	4/26/93	SRS and SBS constraints on NIF	
	JTH & JR Murray	R. Sacks	4/29/93	SBS Suppression on NIF (2)	
	NIF LDBQA File	Ault & Burkhart	6/8/93	Completion of Action Item 9 (filed in 3.1.1)	L-15815-1
3.1.3 Optical Pulse (Fiber) Distribution Systems					

	To:	From:	Date:	Title:	Ref. #
	NIF LDBQA File	Ault & Burkhart	6/8/93	Completion of Action Item 9 (filed in 3.1.1)	L-15815-1
3.1.4 Regenerative Amplifiers					
	Dist	Jack Campbell	5/24/92	Notes from May 6th Beamlet Technical Meeting	BLT 92-103/rack
	NIF Front-End Team	Hugh Kirbie	6/3/93	FET-Switched Pockels Cell Driver	
	NIF LDBQA File	Ault & Karpenko	6/8/93	Completion of Action Item 14	L-15813-1
3.1.5 Preamplifiers (Multi-Pass Rod/Slab Amplifiers)					
	NIF Front-End Team	Hugh Kirbie	6/3/93	FET-Switched Pockels Cell Driver (filed in 3.1.4)	
	NIF LDBQA File	Ault & Karpenko	6/8/93	Completion of Action Item 14 (filed in 3.1.4)	L-15813-1
3.1.6 Isolators					
	NIF LDB QA File	B. Van Wonterghem	6/4/93	Front End isolation requirements - Action Item 27	
	NIF LDBQA File	Ault & Karpenko	6/8/93	Completion of Action Item 14 (filed in 3.1.4)	L-15813-1
3.2 Main amplification system					
			5/1/87	Note from Ken Manes re "i's" on the right	IEEE J Qntm EE
			11/13/92	Beamlet slab costs (Glass)	
			11/16/92	Beamlet pulsed power costs	
	VG		12/1/92	Comparison of amplifier storage efficiencies	02-30-1292-3684
			12/8/92	Update DRAFT (Beamlet amplifier mechanical costs)	
	JTH	A. Erlandson	12/14/92	Performance of the Beamlet Amplifier	
		A. Erlandson	1/4/93	DRAFT (Beamlet lamp costs)	1/4/93 ver.
	EMC	JR Murray	2/22/93	Your request for comment on the "U-turn" configuration proposed, in various versions, by Novarro and Vann	M30222-1
	Dist	K. Jancaitis	4/28/93	Decrease in the baseline NIF laser performance caused by propagating "off-center" wavelengths	LT-011
	Dist	K. Jancaitis	5/3/93	Change in the pulse-shaping requirements for the baseline NIF front end caused by operating the amplifier chain off line center	
				Flashlamp problems	
				Amplifier and Flashlamp development tasks	
	LDB QA File	Bliss	5/28/93	Action item no. 11 (11 May 93), Reconcile alignment centering accuracy	

	To:	From:	Date:	Title:	Ref. #
	Greg Tietbohl	N. Frank & A. Erlandson	6/2/93	Comments on your proposed presentation on amplifier assembly and maintenance issues	
3.2.1 Main amplification system					
	Proceedings Reprint	SPIE: High-power solid state lasesr and applications	3/12/90	Flashlamp Pumping of Nd:Glass Disk Amplifiers	Vol 1277
	ICF Quarterly Report		April-June 1992	Gain Uniformity and Amplified Spontaneous Emission	Volume 2, Number 3
	Dist	M. Rotter	4/14/93	Build-up of depolarization in a laser chain	AMP 93-001
	N. Frank	G. Tietbohl	5/9/93	Finite element analyses of NIF spatial filter and amplifier support frames (copy in 3.2.2)	
	90-day study group	Erlandson, Jancaitis	5/24/93	Resolution of Action Item #1—Efficiency loss due to operating the NIF flashlamps at short pulselengths with no prepulsing	L-15772-1
	J. Atherton	R.E. English	6/21/93	Preliminary analysis: pump-induced beam steering and correction in NIF (also in 6.0)	
3.2.2 Spatial filters					
	NIF Design Team	Ray Smith	5/27/93	Proposed design philosophy for fused silica optics (copy in 3.2.5)	L-15775-1
	N. Frank	G. Tietbohl	5/9/93	Finite element analyses of NIF spatial filter and amplifier support frames	
3.2.3 Mirror assemblies					
3.2.4 Polarizer assembly					
3.2.5 Pockets cell assembly					
	Paisner	Rhodes	4/28/93	Visit from Allied Signal engineers	
	J. Atherton	M. Rhodes	5/27/93	Large Optics for Switch Component Development	
	NIF Design Team	Ray Smith	5/27/93	Proposed design philosophy for fused silica optics	L-15775-1
	LDB QA File	Bliss	5/28/93	Action item no. 2 (29 Apr 93), Determine rep rate requirement for Pockels cell	
3.2.6 Booster amplifier segments					
3.2.7 Interstage hardware					

	To:	From:	Date:	Title:	Ref. #
3.3 Beam transport system					
	Dist	C. Hurley	7/15/86	Mechanical Cost Estimate - 10 Megajoule Laser System	
3.3.1 Spatial filters					
	J. Campbell	J. Auerbach	3/29/93	Spatial Filter Pinhole Sizing for Beamlet	LS&T 93-007
	John Hunt	J. Auerback	4/19/93	Pinhole spacing calculations in CHAINOP	LS&T 93-010
	File	J.T. Hunt	5/4/93	The design rule for the location of ghost foci	JTH:lhs:12-5/5/93-1
3.3.2 Mirror assemblies					
	JTH	C. Hurley	9/24/92	Attached: Athena Megajoule Cost Estimate	ADG86-87/2950R
3.3.3 Final optics system					
		D. Eimerl	Aug-87	Quadrature Frequency Conversion	IEEE JQE QE-23:8/15390
		Short & Skupsky	Mar-90	Frequency Conversion of Broad-Bandwidth Laser Light	IEEE JQE 26:3 p.580-88
	Dist	J. Auerbach	9/13/91	Review of Frequency Conversion Software in MALAPROP	LS&T 91-83
	J. Campbell	Sacks & Auerbach	12/3/92	SBS suppression in Beamlet tripler	LS&T 92-107
	JTH	K. Manes	12/3/92	Three wave mixing with a strong and a weak input - 1st draft	
	Dist	R. Sacks	12/9/92	First modeling results of Nova transverse SRS experiments; prediciton of observable stimulated scattering	LS&T 92-108
	JTH	K. Manes	12/16/92	Three wave mixing with a strong and a weak input - status -	
	Kilkenny & Baldis	Dixit & Wegner	2/19/93	RPP design for large f# experiments on Nova	
	Dist	J. Auerbach	3/24/93	New Software for Modeling of Harmonic Generation by Spatially Varying Beam Distributions	LS&T 93-006
	Lindl & Paisner	E.M. Campbell	3/29/93	Baseline Beam Smoothing on the NIF (Indirect Drive) copy in 3.1	93-267
	JTH & JRM	R. Sacks	4/26/93	SRS and SBS constraints on NIF	
	N. Frank	G. Tietbohl	5/9/93	Finite element analyses of NIF spatial filter and amplifier support frames (copy in 3.2.1)	
	NIF Design Team	Ray Smith	5/27/93	Proposed design philosophy for fused silica optics (copy)	L-15775-1
	NIF QA File	Ken Manes	7/15/93	NIF Final Optics, WBS 3.3.3 and WBS 4.2	
3.3.3.2 Frequency Convertors					

	To:	From:	Date:	Title:	Ref. #
	Dist	Henesian	12/11/84	Four crystal third harmonic generation: A dynamic range and polarization bandwidth extender for the third harmonic	9037R
	JTH & JR Murray	R. Sacks	4/26/93	SRS and SBS constraints on NIF	
	JTH & JR Murray	R. Sacks	4/29/93	SBS Suppression on NIF (2)	
3.3.4 Beam tube system					
3.3.5 Interstage hardware					
3.4 Power conditioning system					
			3/12/93	NIF Pulsed Power System	Revision
	VGs	D. Larson	4/29/93	NIF Pulsed Power Issues	
	LDB File	D. Larson	5/27/93	Resolution of Action Item Number 12	
3.4.1 MOR and preamp systems					
3.4.2 Multi-pass amp and booster systems					
	Henning & Lowdermilk	D. Larson	3/3/92	Nova Upgrade Pulsed Power Development Status and Plans	LDD 92-19
3.5 Alignment and laser-diagnostic systems					
	C. Henning	C. Vann	3/15/93	Estimated costs for the NIF alignment and diagnostic system	
	JTH	K. Manes	3/17/93	NIF Alignment	
	NIF design support team	Bliss,Vann, Van Arsdall	4/5/93	Attached background memo and support team meetings	
	VG	Bliss	4/7/93	Multiple crosshairs	ESB040793-1
	VGs	Bliss	4/8/93	Design considerations	ESB040893-1
		Bliss	4/8/93	Personnel for NIF Design and Cost Basis Effort	
	Dist	Vann & Bliss	4/27/93	Minutes for Alignmnet & Diagnostic Support Team Meeting - 22 April 93	
	Align & Diag Support Team	C. Vann	4/27/93	Cost Estimate Procedures and Assignments	
	Align & Diag Support Team	C. Vann	5/3/93	More Data for Cost Estimates	
	Dist	Vann & Bliss	5/3/93	Minutes for Alignmnet & Diagnostic Support Team Meeting - 29 April 93	
	Dist	Vann & Bliss	4/8/93	90 Day plan for developing a NIF point design for alignment and diagnostic	
	Align & Diag Support Team	C. Vann	5/6/93	Requirements for NIF Alignment and Diagnostics -- Case A	
	Dist	Vann & Bliss	5/18/93	Minutes for Alignmnet & Diagnostic Support Team Meeting - 6 May 93	
	Dist	Vann & Bliss	5/19/93	Minutes for Alignmnet & Diagnostic Support Team Meeting - 13 May 93	
	Dist	Vann & Bliss	5/21/93	Minutes for Alignmnet & Diagnostic Support Team Meeting - 20 May 93	

	To:	From:	Date:	Title:	Ref. #
	E.M. Campbell	Vann & Bliss	6/8/93	Response to comments on "Minutes for Alignmnet & Diagnostic Support Team Meeting - 20 May 93"	
	Dist	Vann & Bliss	6/8/93	Minutes for Alignmnet & Diagnostic Support Team Meeting - 27 May 93	
	Tables	Bliss	6/14/93	NIF Laser System Design Requirements	
	LDB QA File	Bliss	5/28/93	Action item no. 11 (11 May 93), Reconcile alignment centering accuracy	
	Dist	Vann & Bliss	7/7/93	Minutes for Alignmnet & Diagnostic Support Team Meeting - 10 June 93	
3.5.1 MOR systems					
	VG	Bliss	4/8/93	Generic front end	ESB040893-4
3.5.2 Pre-amp systems					
	VG	Bliss	4/8/93	Generic front end (copy)	ESB040893-4
3.5.3 Main amp and beam transport systems					
	VG	Bliss	4/14/93	NIF 11/5/3 amplifier, spatial filter, switch layout	ESB041493-1
	VG	Bliss	4/22/93	Alignment design status: things that seem clear	ESB042293, 040993, 042193, 041893
	LDB QA File	Bliss	5/28/93	Action item no. 2 (29 Apr 93), Determine rep rate requirement for Pockels cell	
3.5.4 Target systems					
	VG	Bliss	3/31/93	Mapping of beam groups to target	ESB033193-1
3.5.5 Alignment subsystem controls					
	VGs	Van Arsdall, D.C., C.C., R.D., W.L., V.M., J.W.	6/4/93	NIF Laser Design Basis Study Integrated Computer Control Systems	
3.5.6 Diagnostic subsystem controls					
	VGs	Van Arsdall, D.C., C.C., R.D., W.L., V.M., J.W.	6/4/93	NIF Laser Design Basis Study Integrated Computer Control Systems (draft)	
3.6 Laser and beam-transport structural support systems					
3.7 Laser auxiliary systems					
4.0 Target area					
	Gary Chenevert, DOE	Steve Younger, LANL	4/2/93	note from EMC "This is my option (1)"	NWT/ICFA:93-101

	To:	From:	Date:	Title:	Ref. #
4.1 Target chamber and containment					
4.2 Final-optics protection					
	NIF QA File	Ken Manes	7/15/93	NIF Final Optics, WBS 3.3.3 & 4.2	
4.3 Target emplacement and positioning/alignment systems					
4.4 Target diagnostics - phase I					
4.5 Target area structural support systems					
4.6 Environmental protection systems					
4.7 Target area auxiliary systems					
5.0 Integrated computer control systems					
	NIF design support team	Bliss,Vann, Van Arsdall	4/5/93	Attached background memo and support team meetings (copy)	
	VGs	Bliss	4/8/93	Design considerations (copy)	ESB040893-1
		Bliss	4/8/93	Personnel for NIF Design and Cost Basis Effort (copy)	
	VGs	Van Arsdall, D.C., C.C., R.D., W.L., V.M., J.W.	6/4/93	NIF Laser Design Basis Study Integrated Computer Control Systems (filed in 3.5.5)	
5.1 Computer system					
5.2 Control software					
6.0 Optical components					
	Dist	J. Campbell	3/6/91	"De-Rating" Optic Damage Thresholds for Beamlet Performance	BLT 91-022/rac
	John Hunt	Ken Manes	4/21/92	Prism Equations	
	Those who are interested	Manes, Eimerl	4/27/92	Non-collinear phase matched tripling for the Nova Upgrade	
	JC, DE, JAP, & HP	J.T. Hunt	5/18/92	Attached memo 8-4/27/92-1: First Pass Through the "Physics Design" of the NU Laser System	JTH:lhs:9-5/18/92-1
	JTH	J. Atherton	2/20/93	Input for development paths of NIF laser components; amplifiers, switch, and frequency conversion crystals	
	J.T. Hunt	E.M. Campbell		Comments on Eimerl's memo on beam smoothing (copy)	
	NIF Design Team	Ray Smith	5/27/93	Proposed design philosophy for fused silica optics (copy)	L-15775-1
	J. Atherton	R.E. English	6/21/93	Preliminary analysis: pump-induced beam steering and correction in NIF (also in 3.2.1)	

	To:	From:	Date:	Title:	Ref. #
	Dist	Rainer, Atherton, Kozlowski	6/21/93	Current and Projected Damage Thresholds for NIF Optical Components: Addresses Laser Design Basis Action Item #29	LDG 93-033
	Atherton	Kozlowski	6/23/93	Properties of Pyrex: LDB Action Item #24	LM 93-028
	Hunt, Williams	Sawicki	7/16/93	Optic Thickness Requirements	L-15907-1
	File	Hunt, Renard	7/16/93	Incorporation of damage thresholds in Btgain for shaped pulses (filed in 1.4)	L-15949-1
	Dist	Ray Smith	7/7/93	Deflection and stress analysis for Type I and Type II KDP conversion crystals for the NIF (filed in 1.4)	
6.1 Laser glass and coatings					
	CLEO paper	Caird, et al.	5/11/89	Passive Optical Losses in Laser Glass	UCRL-100012
		Campbell & Wallerstein	5/26/93	Elimination of Platinum Inclusions in Phosphate Laser Glasses	UCRL-53932
	Laser Glass Selectors	J.B. Trenholme	6/2/93	What are the best laser glass parameters?	LT-014
6.2 Lenses and coatings					
6.3 Mirrors and coatings					
	VGs	Kozlowski, Rainer, Chow	7/7/93	Feasibility of 3w HRs for the NIF	
6.4 Polarizers and coatings					
	M. Kozlowski	Wade Williams	8/2/93	NIF Costs for Changes in Polarizer Parameters	
6.5 KDP and KD*P crystals					
6.5.3 Frequency Convertors					
	File	Hunt, Renard	6/15/93	Modeling the dynamic range of NIF's frequency tripler	JTH:lhs:12-6/16/93-1
	Sawicki, Hunt, & Murray	C. Barker	6/28/93	NIF Baseline Harmonic Generation: Type I SHG/Type II THG (NIF CDR)	BLT-FC-93-03
	Dist	Atherton	7/27/93	Type I/II versus Type II/II frequency conversion for the NIF	L-15956-1
	Sawicki, Hunt, & Murray	C. Barker	6/28/93	Harmonic Generation development plan for the NIF LDB Study	BLT-FC-93-04
6.6 Wave-plate assemblies					
	Dist	J.R. Murray	5/21/87	Uniform Illumination of a Surface with a Poor-Quality Laser Beam Using Speckle Averaging	LRD 87-106 / 5848T
	Dist	J.R. Murray	3/1/88	Intensity Smoothing in the Target Spot for Large Fusion Lasers: An Approach Based on Speckle Statistics	LRD 88-033 / 5546K

	To:	From:	Date:	Title:	Ref. #
6.7 Wedges					
6.8 Beam-smoothing optics					
	Whom it may concern	Ken Manes	7/8/92	Scaling optical transport in the Nova Upgrade target chamber	
	Dick Berger	Ken Manes	1/8/93	Beam Smoothing for NIF	
	Lindl, Paisner	E.M. Campbell	3/29/93	Baseline Beam Smoothing on the NIF (Indirect Drive)	93-267
	J. Paisner	D. Eimerl	4/14/93	Coherence Control for the NIF/Nova Upgrade Laser 90-Day Study (copy)	
6.9 Debris shields and windows					
30.0 Operation					
				FUSION SYSTEMS OPERATIONS	thick document
		Hunt, Foley	x/x/84	1984 Annual Report,	copy of 2 articles

Appendix C

Optics Tables

Table 15.3 Specifications of the large optics blank for the NIF

Component	Blank Dimension in mm (approximate)	Material	Attenuation Coefficient	Birefrin-gence	ΔN	Wave Front Distortion	Gradient per cm	Bulk Damage Threshold	Surface Damage Threshold
Laser slab	695 x 388 x 36	LG-750	≤ .0015/cm	≤ 5 nm/cm		λ/7	λ/55	≥30J/cm²@1ns	≥20J/cm²@1ns
Cladding glass	800 x 50 x 14	LG-750 Cu doped	N/A	≤ 20 nm/cm	N/A	N/A	N/A	N/A	N/A
Switch windows	387 x 387 x 40	F/S	≤ .0015/cm	≤ 10 nm/cm	$\pm 1 \times 10^{-6}$	λ/15	λ/35	≥30J/cm²@1ns	≥20J/cm²@1ns
Spatial filter lens	372 x 378 x 40	F/S	≤ .0015/cm	≤ 10 nm/cm	$\pm 1 \times 10^{-6}$	λ/15	λ/35	≥30J/cm²@1ns	≥20J/cm²@1ns
Beam splitters	TBD	F/S	≤ .0015/cm	≤ 10 nm/cm	$\pm 1 \times 10^{-6}$	λ/15	λ/35	≥30J/cm²@1ns	≥20J/cm²@1ns
Reflection polarizer	366 x 667 x 94	BK-7	≤ .0015/cm	≤ 6 nm/cm	$\pm 1 \times 10^{-6}$	λ/15	λ/35	≥3J/cm²@3ns	≥30J/cm²@3ns
Transmission polarizer	TBD	F/S	≤ .0015/cm	≤ 10 nm/cm	$\pm 1 \times 10^{-6}$	λ/15	λ/35	≥30J/cm²@1ns	≥20J/cm²@1ns
Cavity mirror (leaky)	364 x 343 x 84	BK-7	≤ .0015/cm	≤ 6 nm/cm	$\pm 1 \times 10^{-6}$	λ/15	λ/35	≥3J/cm²@3ns	≥30J/cm²@3ns
Cavity mirror (HR)	364 x 343 x 84	BK-7	≤ .0015/cm	≤ 6 nm/cm	$\pm 1 \times 10^{-6}$	N/A	N/A	≥3J/cm²@3ns	≥30J/cm²@3ns
Transport mirror	419 x 384 x 84	BK-7	≤ .0015/cm	≤ 6 nm/cm	$\pm 2 \times 10^{-6}$	λ/10	λ/25	≥3J/cm²@3ns	≥30J/cm²@3ns
Alignment lens	TBD	BK-7	≤ .0015/cm	≤ 6 nm/cm	$\pm 2 \times 10^{-6}$	λ/10	λ/25	≥3J/cm²@3ns	≥30J/cm²@3ns
Conversion Xtals	358 x 337 x 8 to 10.5	KDP/KD*P	≤ .060/cm	≤ 4 nm/cm		λ/8	λ/10	≥40J/cm²@10ns	≥40J/cm²@10ns
Switch Xtals	357 x 345 10	KDP/KD*P	≤ .060/cm	≤ 4 nm/cm		λ/8	λ/10	≥40J/cm²@10ns	≥40J/cm²@10ns
Elbow mirror	365 x 591 x 94	BK-7	≤ .0015/cm	≤ 6 nm/cm	$\pm 1 \times 10^{-6}$	N/A	N/A	≥3J/cm²@3ns	≥30J/cm²@3ns
Debris shield	414 x 393 x 12	F/S	≤ .0015/cm	≤ 10 nm/cm	$\pm 2.5 \times 10^{-6}$	λ/10	N/A	≥30J/cm²@1ns	≥20J/cm²@1ns
Focus lens	414 x 393 x 33	F/S	≤ .0015/cm	≤ 10 nm/cm	$\pm 1 \times 10^{-6}$	λ/15	λ/35	≥30J/cm²@1ns	≥20J/cm²@1ns
Vacuum Window	364 x 343 x 54.5	F/S	≤ .0015/cm	≤ 10 nm/cm	$\pm 1 \times 10^{-6}$	λ/15	λ/35	≥30J/cm²@1ns	≥20J/cm²@1ns

Table 15.4 Specifications of the large finished optics for the NIF

Component	Finished Dimensions	Wave Front in Reflection	Wave Front in Transmission	Gradient	Angle of use (approximate)	Coating Specifications
Laser Slab	691 x 384 x 32	N/A	λ/6	λ/30 cm^{-1}	56.66°	N/A
Cladding glass	N/A	N/A	N/A	N/A	N/A	N/A
Switch windows	387 x 375 x 36	N/A	λ/8	λ/15 cm^{-1}	0°	Sol Gel
Spatial filter lens	372 x 378 x 36	N/A	λ/10	λ/25 cm^{-1}	0°	Sol Gel
Beam Splitters	To be determined					
Reflection Polarizer	366 x 667 x 90	λ/12	λ/12	λ/30 cm^{-1}	56.43°	See attached notes marked polarizers
Transmission polarizer	TBD	N/A	λ/12	λ/30 cm^{-1}	55.42°	See attached notes marked polarizers
Cavity mirror (leaky)	364 x 343 x 80	λ/8	λ/4	λ/35 cm^{-1}	0°	See attached notes marked mirrors
Cavity mirror (HR)	364 x 343 x 80	λ/8	N/A	λ/35 cm^{-1}	0°	See attached notes marked mirrors
Transport mirror (ave.)	419 x 384 x 80	λ/8	N/A	λ/35 cm^{-1}	45°	See attached notes marked mirrors
Alignment lens	To be determined					Sol Gel
Conversion Crystals	354 x 333 x 8 to 10.5	N/A	λ/4	λ/4 cm^{-1}	0°	Sol Gel
Switch Crystals	357 x 345 x 10	N/A	λ/4	λ/4 cm^{-1}	0°	Sol Gel
Elbow mirror	365 x 591 x 90	λ/12	N/A	λ/30 cm^{-1}	45°	See attached notes marked mirrors
Debris shield	414 x 393 x 10	N/A	λ/2	λ/15 cm^{-1}	0°	Sol Gel
Focus lens	414 x 393 x 29	N/A	λ/10	λ/15 cm^{-1}	0°	Sol Gel
Vacuum Window	364 x 343 x 5 to 50.5	N/A	λ/8	λ/15 cm^{-1}	0°	Sol Gel

Trans. polar. is also used in reflection, and should be speced.

Table 15.5 Comparison of Beamlet production costs and NIF projected production costs

	Beamlet*				NIF cost projection			
	Cost per Beamlet	Material cost ($/cm^3)	Finishing cost ($/m^2)	Coating cost ($/m^2)	Cost per Beamlet	Material cost ($/cm^3)	Finishing cost ($/m^2)	Coating cost ($/m^2)
Amplifiers	$745K	2.97	14200	—	$214K	0.91	6600	—
Cav. Sp. Filter	54	1.57	33200**		16	1.00	8000	2400
Cavity HR	46	0.55	15000**	54300**	20	0.50	12600	25800
Pockels KD*P	68	40.20	47800		28	18.24	18000	3100
Pockels windows	26	1.87	21000		16	1.00	6500	2400
Polarizer	42	0.54	13600	33200	22	0.50	7700	31600
Trans.Sp. Filter	54	1.57	33200**		16	1.00	8000	2400
Trans. HR (x2.7)	40	0.17	16600		21	0.15	12600	23700
KDP doubler	45	15.50	47800		11	4.85	18000	700
KD*P tripler	68	40.20	47800		23	18.24	18000	800
Focus lens	—	—	—		8	1.00	8000	2400
Debris shield	—	—	—		5	1.00	9000	2400
Vac. window	—	—	—		9	1.00	6500	2400
Elbow HR	42	0.54	13600	33200	13	0.15	12600	23900
Total	$1,230K				$422K			

*Does not include spares

**Round optics. Cost based on clear aperture

Appendix D

Laser Document File Log

	To:	From:	Date:	Title:	Ref. #
1.0 Project office					
1.1 Project management					
	Dist	RS & JTH	3/23/93	National Ignition Facility (NIF) Design Basis Strategy	LDB Mtg notes
	Dist		3/29/93	Development of the NIF laser design basks	LDB Mtg notes
	Dist	EMC	4/6/93	National Ignition Facility Project Leadership	93-281
	Dist	LDB Mtg VGs	4/8/93	Agenda - LDB Meeting 4/8/93	
		VGs	5/1/93	NIF/CDR organization possibilities	
1.1.2 Organization and Responsibilities					
	Henning & Lowdermilk	W. Simmons	5/9/93	Remarks: Nova Upgrade Selection Meeting of 4/1/93	
1.1.3 Configuration Management & Control Board					
	LDB Task Leaders	R. Sawicki	4/27/93	Change control of the LDB baseline laser configuration	L-15683-1
	LDB Task Leaders	R. Sawicki	5/21/93	Configuration Change Request #1 Approval	L-15753-1
	LDB Task Leaders	R. Sawicki	6/14/93	LDB Action Item Status 6/14/93	L-15821-1
1.2 Project control					
	NIF/NU Estimators	Henning	12/18/92	Updated Cost Estimate for the Ignition Faclity	Rev. 1 - New Trenholme Code
	JTH	Henning	1/13/93	Cost Allocation for the Amplifier and Beam Transport	
	LDB Task Ldrs	JTH & RS	4/6/93	Laser Design Basis QA File	LS&T 93-009
	Dist	J. Post	4/13/93	Account Structure for 90-Day Study	
	Dist	JTH	4/15/93	Cost Estimate Worksheet	L-15648-1
	Patterson/Paisner/Lowdermilk/Henning	R. Sawicki	4/29/93	Proposed WBS changes for LDB study	L-15687-1
	LDB Task Leaders	Sawicki	6/9/93	LCB Cost Review (meeting notice)	L-15803-1
	Hunt, Sawicki	Simmons	6/11/93	LDF Interim Review Comments (stream of consciousness) -- copy in 1.4	
1.2.2 Cost & Schedule Control System (CSCS)					
	LDB Task Leaders	R. Sawicki	4/30/93	Labor rates for LDB study	L-15698-1

	To:	From:	Date:	Title:	Ref. #
1.2.2.3 Costs, Manpower, and Contingency					
	Dist	John Post	5/11/93	Projected Incremental Overhead Rates for the NIF Project	NIF-LLNL-93-014 L-15730-1
	S. Patterson	John Post	5/21/93	LLNL NIF CDR Cost Summary, April 1993	NIF-LLNL-93-020 L-15750-1
	S. Patterson	John Post	6/9/93	NIF WBS dated April 27, 1993	NIF-LLNL-93-025 L-15800-1
1.3 Assurances					
			4/1/92	Nova Upgrade Preconstruction Activities - LLNL ICF Program	83 pages
	LDB Task Ldrs	JTH & RS	4/6/93	Laser Design Basis QA File (w/note from EMC on front)	LS&T 93-009
1.4 Systems analysis					
	J. Holzrichter	Trenholme	10/1/81	Multipass Systems	R&D #81-51
	Dist	L. Pleasance	6/17/83	Zeus Project Status	ZLP 83-058
	Dist	G.J. Suski	7/31/85	Nova As-Built Cost Analysis	NOVA 85-039
	Laser Designers	JBT, JTH, JRM	7/3/91	Assumptions which produced the Upgrade design	LS&T 91-65
	EMC, JL, JAP	JTH,SH,KRM, JBT,JRM	7/6/92	A critical analysis of Nova Upgrade Laser Design	JTH:lhs:9-7/6/92-1
		JTH	7/31/92	VGs on frequency-tripled pulse	JTH-7/31/92
	Dist	Hunt, Manes, Renard	8/14/92	Pulse Shaping and Pulse Stacking Considerations	
			9/16/92	Steve Haan Scalings for Nova Upgrade Targets	
	EMC	KRM,JTH,JBT ,JRM,ST	10/9/92	Confidence level of ignition versus cost scaling	JTH:lhs:10-10/9/92-1
	JTH & other Laser Aficionados	Trenholme	10/12/92	Effect of First-to-Last Photon Gain Ratio Constraint on Laser Performance	LS&T 92-091
		Trenholme	1/7/93	CHAINOP9.C	
	Dick Berger	Ken Manes	1/8/93	Beam Smoothing for NIF (filed in 6.8)	
	JTH	C.D. Henning	1/13/93	Cost Allocation for the Amplifier and Beam Transport	(w/changes)
	Dist	D. Eimerl	2/19/93	FM and AM bandwidth for the NIF	
	B. Grant Logan	J.A. Paisner	2/25/93	Learning Curve Values for ICF Laser Drivers Built at LLNL	LS&T 93-013
	File	DNF,JTH,JRM ,JBT	3/22/93	Power and energy curves for the Beamlet and NIF Beamlet	JTH:lhs:12-3/22/93-1
	VGs	RS & JTH	3/23/93	National Ignition Facility (NIF) Design Basis Strategy	3-23-93/93-005 RS:tms
	JAP,JTH,WHL ,CDH	D.N. Frank	3/29/93	A directed effort for the NIF	

	To:	From:	Date:	Title:	Ref. #
	John Hunt	Ken Jancaitis	1/13/92	Quick Estimate for the Expected Energy Storage Performance in the Large Zig-Zag Slab Laser	LS&T 92-8
	Dist	S. Haan	7/28/92	Pulse shapes for the Nova Upgrade	
	Dist	Hunt, Manes, Renard	8/14/92	Pulse Shaping and Pulse Stacking Considerations (filed in 1.4)	
	KRM,JTH,DE, JL,MR,SP,Suter, Berger, Woodworth	S. Haan	10/4/92	Figure-of-merit for upgrade target systematics	
		VanWontergfhem et al.	1/1/93	A Compact and Versatile Pulse Generation and Shaping Subsystem for High Energy Laser Systems	UCRL-JD-111452
	Dick Berger	Ken Manes	1/8/93	Beam Smoothing for NIF (filed in 6.8)	
	Trenholme	Eimerl & Milam	2/1/93	"Quickie" derivation of the nonlinear phases in zig-zag amplifiers	
		Hector Baldis	2/22/93	Laser-Plasma Instabilities and Coherence Control	JDM-APS92
	Lindl & Paisner	E.M. Campbell	3/29/93	Baseline Beam Smoothing on the NIF (Indirect Drive)	93-267
	Bob Nelson	Ken Manes	3/29/93	Next OSL experiments	
	File	JTH	4/8/93	Direct Drive Pulse Shape-Rochester Version	L-15636-1
			4/9/93	Combined pulse stuff - 200:1 contrast ratio	
	File	JTH	4/13/93	New NIF Pulse Shapes from S. Haan	L-15635-1
	J. Paisner	D. Eimerl	4/14/93	Coherence Control for the NIF/Nova Upgrade Laser 90-Day Study (copy)	
	Dist	K. Jancaitis	4/28/93	Decrease in the baseline NIF laser performance caused by propagating "off-center" wavelengths (copy in 3.2)	
	Dist	K. Jancaitis	5/3/93	Change in the pulse-shaping requirements for the baseline NIF front end caused by operating the amplifier chain off line center (copy in 3.2)	
	J.T. Hunt	K. Manes	5/12/93	Note re: Karpenko charts and front-end costing	
	Earl Ault	Ken Manes	5/25/93	ASE power and its effect on input pulse shape specifications	
				Idealized Pulse Shapes for NIF Study	
3.1.1 Multifrequency Master Oscillator (MOR)					
	Dist	Ault & Murray	5/24/93	Resolution of Action Item #35-Impact of 1w Wavelength Range on Front End	L-15766-1
	NIF LDBQA File	Ault & Burkhart	6/8/93	Completion of Action Item 9	L-15815-1
3.1.2 Modulators					

	To:	From:	Date:	Title:	Ref. #
	JTH & JR Murray	R. Sacks	4/26/93	SRS and SBS constraints on NIF	
	JTH & JR Murray	R. Sacks	4/29/93	SBS Suppression on NIF (2)	
	NIF LDBQA File	Ault & Burkhart	6/8/93	Completion of Action Item 9 (filed in 3.1.1)	L-15815-1
3.1.3 Optical Pulse (Fiber) Distribution Systems					
	NIF LDBQA File	Ault & Burkhart	6/8/93	Completion of Action Item 9 (filed in 3.1.1)	L-15815-1
3.1.4 Regenerative Amplifiers					
	NIF Front-End Team	Hugh Kirbie	6/3/93	FET-Switched Pockels Cell Driver	
	NIF LDBQA File	Ault & Karpenko	6/8/93	Completion of Action Item 14	L-15813-1
3.1.5 Preamplifiers (Multi-Pass Rod/Slab Amplifiers)					
	NIF Front-End Team	Hugh Kirbie	6/3/93	FET-Switched Pockels Cell Driver (filed in 3.1.4)	
	NIF LDBQA File	Ault & Karpenko	6/8/93	Completion of Action Item 14 (filed in 3.1.4)	L-15813-1
3.1.6 Isolators					
	NIF LDB QA File	B. Van Wonterghem	6/4/93	Front End isolation requirements - Action Item 27	
	NIF LDBQA File	Ault & Karpenko	6/8/93	Completion of Action Item 14 (filed in 3.1.4)	L-15813-1
3.2 Main amplification system					
			5/1/87	Note from Ken Manes re "i's" on the right	IEEE J Qntm EE
			11/13/92	Beamlet slab costs (Glass)	
			11/16/92	Beamlet pulsed power costs	
	VG		12/1/92	Comparison of amplifier storage efficiencies	02-30-1292-3684
			12/8/92	Update DRAFT (Beamlet amplifier mechanical costs)	
	JTH	A. Erlandson	12/14/92	Performance of the Beamlet Amplifier	
		A. Erlandson	1/4/93	DRAFT (Beamlet lamp costs)	1/4/93 ver.
	EMC	JR Murray	2/22/93	Your request for comment on the "U-turn" configuration proposed, in various versions, by Novarro and Vann	M30222-1
	Dist	K. Jancaitis	4/28/93	Decrease in the baseline NIF laser performance caused by propagating "off-center" wavelengths	

	To:	From:	Date:	Title:	Ref. #
	Dist	K. Jancaitis	5/3/93	Change in the pulse-shaping requirements for the baseline NIF front end caused by operating the amplifier chain off line center	
				Flashlamp problems	
				Amplifier and Flashlamp development tasks	
	LDB QA File	Bliss	5/28/93	Action item no. 11 (11 May 93), Reconcile alignment centering accuracy.	
	Greg Tietbohl	N. Frank & A. Erlandson	6/2/93	Comments on your proposed presentation on amplifier assembly and maintenance issues	
3.2.1 Main amplification system					
	Dist	M. Rotter	4/14/93	Build-up of depolarization in a laser chain	AMP 93-001
	N. Frank	G. Tietbohl	5/9/93	Finite element analyses of NIF spatial filter and amplifier support frames (copy in 3.2.2)	
	90-day study group	Erlandson, Jancaitis	5/24/93	Resolution of Action Item #1—Efficiency loss due to operating the NIF flashlamps at short pulselengths with no prepulsing	L-15772-1
3.2.2 Spatial filters					
	NIF Design Team	Ray Smith	5/27/93	Proposed design philosophy for fused silica optics (copy in 3.2.5)	L-15775-1
	N. Frank	G. Tietbohl	5/9/93	Finite element analyses of NIF spatial filter and amplifier support frames	
3.2.3 Mirror assemblies					
3.2.4 Polarizer assembly					
3.2.5 Pockets cell assembly					
	Paisner	Rhodes	4/28/93	Visit from Allied Signal engineers	
	J. Atherton	M. Rhodes	5/27/93	Large Optics for Switch Component Development	
	NIF Design Team	Ray Smith	5/27/93	Proposed design philosophy for fused silica optics	L-15775-1
	LDB QA File	Bliss	5/28/93	Action item no. 2 (29 Apr 93), Determine rep rate requirement for Pockels cell	
3.2.6 Booster amplifier segments					

	To:	From:	Date:	Title:	Ref. #
3.2.7 Interstage hardware					
3.3 Beam transport system					
	Dist	C. Hurley	7/15/86	Mechanical Cost Estimate - 10 Megajoule Laser System	
3.3.1 Spatial filters					
	J. Campbell	J. Auerbach	3/29/93	Spatial Filter Pinhole Sizing for Beamlet	LS&T 93-007
	File	J.T. Hunt	5/4/93	The design rule for the location of ghost foci	JTH:lhs:12-5/5/93-1
3.3.2 Mirror assemblies					
	JTH	C. Hurley	9/24/92	Attached: Athena Megajoule Cost Estimate	ADG86-87/2950R
3.3.3 Final optics system					
		D. Eimerl	Aug-87	Quadrature Frequency Conversion	IEEE JQE QE-23:8/15390
		Short & Skupsky	Mar-90	Frequency Conversion of Broad-Bandwidth Laser Light	IEEE JQE 26:3 p.580-88
	Dist	J. Auerbach	9/13/91	Review of Frequency Conversion Software in MALAPROP	LS&T 91-83
	J. Campbell	Sacks & Auerbach	12/3/92	SBS suppression in Beamlet tripler	LS&T 92-107
	JTH	K. Manes	12/3/92	Three wave mixing with a strong and a weak input - 1st draft	
	Dist	R. Sacks	12/9/92	First modeling results of Nova transverse SRS experiments; prediciton of observable stimulated scattering	LS&T 92-108
	JTH	K. Manes	12/16/92	Three wave mixing with a strong and a weak input - status -	
	Kilkenny & Baldis	Dixit & Wegner	2/19/93	RPP design for large f# experiments on Nova	
	Dist	J. Auerbach	3/24/93	New Software for Modeling of Harmonic Generation by Spatially Varying Beam Distributions	LS&T 93-006
	Lindl & Paisner	E.M. Campbell	3/29/93	Baseline Beam Smoothing on the NIF (Indirect Drive) copy in 3.1	93-267
	JTH & JRM	R. Sacks	4/26/93	SRS and SBS constraints on NIF	
	N. Frank	G. Tietbohl	5/9/93	Finite element analyses of NIF spatial filter and amplifier support frames (copy in 3.2.1)	
	NIF Design Team	Ray Smith	5/27/93	Proposed design philosophy for fused silica optics (copy)	L-15775-1
3.3.3.2 Frequency Convertors					

	To:	From:	Date:	Title:	Ref. #
	Dist	Henesian	12/11/84	Four crystal third harmonic generation: A dynamic range and polarization bandwidth extender for the third harmonic	9037R
	JTH & JR Murray	R. Sacks	4/26/93	SRS and SBS constraints on NIF	
	JTH & JR Murray	R. Sacks	4/29/93	SBS Suppression on NIF (2)	
3.3.4 Beam tube system					
3.3.5 Interstage hardware					
3.4 Power conditioning system					
			3/12/93	NIF Pulsed Power System	Revision
	VGs	D. Larson	4/29/93	NIF Pulsed Power Issues	
	LDB File	D. Larson	5/27/93	Resolution of Action Item Number 12	
3.4.1 MOR and preamp systems					
3.4.2 Multi-pass amp and booster systems					
	Henning & Lowdermilk	D. Larson	3/3/92	Nova Upgrade Pulsed Power Development Status and Plans	LDD 92-19
3.5 Alignment and laser-diagnostic systems					
	C. Henning	C. Vann	3/15/93	Estimated costs for the NIF alignment and diagnostic system	
	JTH	K. Manes	3/17/93	NIF Alignment	
	NIF design support team	Bliss,Vann, Van Arsdall	4/5/93	Attached background memo and support team meetings	
	VG	Bliss	4/7/93	Multiple crosshairs	ESB040793-1
	VGs	Bliss	4/8/93	Design considerations	ESB040893-1
		Bliss	4/8/93	Personnel for NIF Design and Cost Basis Effort	
	Dist	Vann & Bliss	4/27/93	Minutes for Alignmnet & Diagnostic Support Team Meeting - 22 April 93	
	Align & Diag Support Team	C. Vann	4/27/93	Cost Estimate Procedures and Assignments	
	Align & Diag Support Team	C. Vann	5/3/93	More Data for Cost Estimates	
	Dist	Vann & Bliss	5/3/93	Minutes for Alignmnet & Diagnostic Support Team Meeting - 29 April 93	
	Dist	Vann & Bliss	4/8/93	90 Day plan for developing a NIF point design for alignment and diagnostic	
	Align & Diag Support Team	C. Vann	5/6/93	Requirements for NIF Alignment and Diagnostics -- Case A	
	Dist	Vann & Bliss	5/18/93	Minutes for Alignmnet & Diagnostic Support Team Meeting - 6 May 93	

	To:	From:	Date:	Title:	Ref. #
	Dist	Vann & Bliss	5/19/93	Minutes for Alignmnet & Diagnostic Support Team Meeting - 13 May 93	
	Dist	Vann & Bliss	5/21/93	Minutes for Alignmnet & Diagnostic Support Team Meeting - 20 May 93	
	E.M. Campbell	Vann & Bliss	6/8/93	Response to comments on "Minutes for Alignmnet & Diagnostic Support Team Meeting - 20 May 93"	
	Dist	Vann & Bliss	6/8/93	Minutes for Alignmnet & Diagnostic Support Team Meeting - 27 May 93	
	Tables	Bliss	6/14/93	NIF Laser System Design Requirements	
	LDB QA File	Bliss	5/28/93	Action item no. 11 (11 May 93), Reconcile alignment centering accuracy	
3.5.1 MOR systems					
	VG	Bliss	4/8/93	Generic front end	ESB040893-4
3.5.2 Pre-amp systems					
	VG	Bliss	4/8/93	Generic front end (copy)	ESB040893-4
3.5.3 Main amp and beam transport systems					
	VG	Bliss	4/14/93	NIF 11/5/3 amplifier, spatial filter, switch layout	ESB041493-1
	VG	Bliss	4/22/93	Alignment design status: things that seem clear	ESB042293, 040993, 042193, 041893
	LDB QA File	Bliss	5/28/93	Action item no. 2 (29 Apr 93), Determine rep rate requirement for Pockels cell	
3.5.4 Target systems					
	VG	Bliss	3/31/93	Mapping of beam groups to target	ESB033193-1
3.5.5 Alignment subsystem controls					
	VGs	Van Arsdall, D.C., C.C., R.D., W.L., V.M., J.W.	6/4/93	NIF Laser Design Basis Study Integrated Copmputer Control Systems	
3.5.6 Diagnostic subsystem controls					
3.6 Laser and beam-transport structural support systems					
3.7 Laser auxiliary systems					
4.0 Target area					

	To:	From:	Date:	Title:	Ref. #
	Gary Chenevert, DOE	Steve Younger, LANL	4/2/93	note from EMC "This is my option (1)"	NWT/ICFA:93-101
4.1 Target chamber and containment					
4.2 Final-optics protection					
4.3 Target emplacement and positioning/alignment systems					
4.4 Target diagnostics - phase I					
4.5 Target area structural support systems					
4.6 Environmental protection systems					
4.7 Target area auxiliary systems					
5.0 Integrated computer control systems					
	NIF design support team	Bliss,Vann, Van Arsdall	4/5/93	Attached background memo and support team meetings (copy)	
	VGs	Bliss	4/8/93	Design considerations (copy)	ESB040893-1
		Bliss	4/8/93	Personnel for NIF Design and Cost Basis Effort (copy)	
5.1 Computer system					
5.2 Control software					
6.0 Optical components					
	Dist	J. Campbell	3/6/91	"De-Rating" Optic Damage Thresholds for Beamlet Performance	BLT 91-022/rac
	JTH	J. Atherton	2/20/93	Input for development paths of NIF laser components; amplifiers, switch, and frequency conversion crystals	
	J.T. Hunt	E.M. Campbell		Comments on Eimerl's memo on beam smoothing (copy)	
	NIF Design Team	Ray Smith	5/27/93	Proposed design philosophy for fused silica optics (copy)	L-15775-1
	Dist	Rainer, Atherton, Kozlowski	6/21/93	Current and Projected Damage Thresholds for NIF Optical Components: Addresses Laser Design Basis Action Item #29	LDG 93-033
6.1 Laser glass and coatings					
		Campbell & Wallerstein	5/26/93	Elimination of Platinum Inclusions in Phosphate Laser Glasses	UCRL-53932

	To:	From:	Date:	Title:	Ref. #
	Laser Glass Selectors	J.B. Trenholme	6/2/93	What are the best laser glass parameters?	LT-014
6.2 Lenses and coatings					
6.3 Mirrors and coatings					
6.4 Polarizers and coatings					
6.5 KDP and KD*P crystals					
6.5.3 Frequency Convertors					
	File	Hunt, Renard	6/15/93	Modeling the dynamic range of NIF's frequency tripler	JTH:lhs:12-6/16/93-1
6.6 Wave-plate assemblies					
	Dist	J.R. Murray	5/21/87	Uniform Illumination of a Surface with a Poor-Quality Laser Beam Using Speckle Averaging	LRD 87-106 / 5848T
	Dist	J.R. Murray	3/1/88	Intensity Smoothing in the Target Spot for Large Fusion Lasers: An Approach Based on Speckle Statistics	LRD 88-033 / 5546K
6.7 Wedges					
6.8 Beam-smoothing optics					
	Whom it may concern	Ken Manes	7/8/92	Scaling optical transport in the Nova Upgrade target chamber	
	Dick Berger	Ken Manes	1/8/93	Beam Smoothing for NIF	
	Lindl, Paisner	E.M. Campbell	3/29/93	Baseline Beam Smoothing on the NIF (Indirect Drive)	93-267
	J. Paisner	D. Eimerl	4/14/93	Coherence Control for the NIF/Nova Upgrade Laser 90-Day Study (copy)	
6.9 Debris shields and windows					

Appendix E

Laser Design Basis Presentation to DOE
August 11, 1993

The Laser Design Basis study

- Purpose
- Entry point design and performance
- Detailing of the design
- NIF options
- Recommended point design for the CDR

Laser Design Basis study

Purpose: Put in place a framework for the CDR

- Work Breakdown Structure
- Cost accounting system
- Comprehensive database of labor and materials for NIF construction
- Documented list of costs, cost algorithms, and assumptions
- "First pass" bottom-up costing of all laser components by the engineers responsible for the CDR
- Lay out the issues for selection of a CDR point design

- Initial review for Deputy Project Managers in June
- Study is being reviewed by an outside "blue team"

Requirements assumed for the LDB study

- 1.8 MJ, 500 TW on target, pulse shape as described by Steve Haan
- ≥192 beamlets (8-fold symmetry, 4 beamlets/spot)
- "Green field" site-- no site-specific design features
- Generic building sized but not costed (C. Henning)
- Target area not studied

LDB Laser architecture

- Four-pass multipass laser
- Plasma-electrode Pockels cell switch
- Injection in transport spatial filter

Not considered:

- MOPA
- Double-pass
- U-turn
- Injection in cavity spatial filter

Laser Performance

Projected routine operating point

based on judgement concerning damage fluence
of components available in ~5 years

Not highest performance we could project

Not derated performance due to poor QA on components

Accuracy: ± 10-15%
Relative accuracy between designs
with the same assumptions is better
than absolute accuracy.

Entry point design for LDB study

► Design selected previously using preliminary cost algorithms

11-5-3, 35-cm aperture

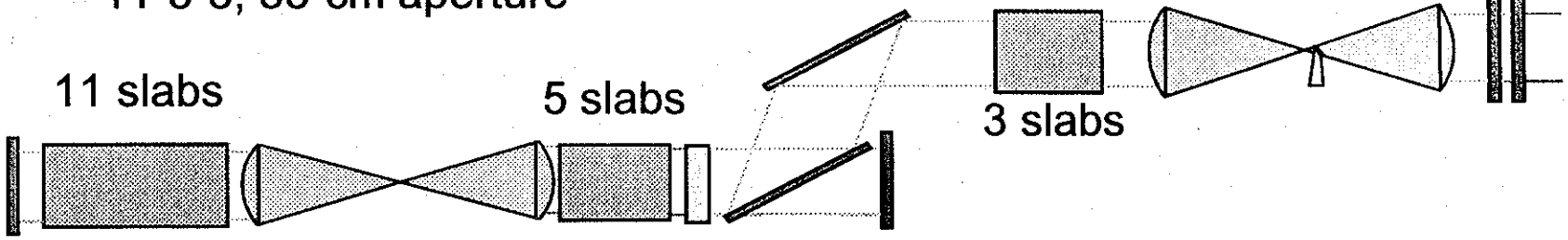

- Beam size ~31x33 cm at zero intensity
- thin disks (3.2 cm) , short pump pulse (390 μs), high doping
- 192 beamlets

► Engineers used this as a baseline for bottom up cost estimate, but also looked at scaling with number of beamlets, different apertures, etc.

Amplifier clear aperture vs. Beam zero intensity vs. ...

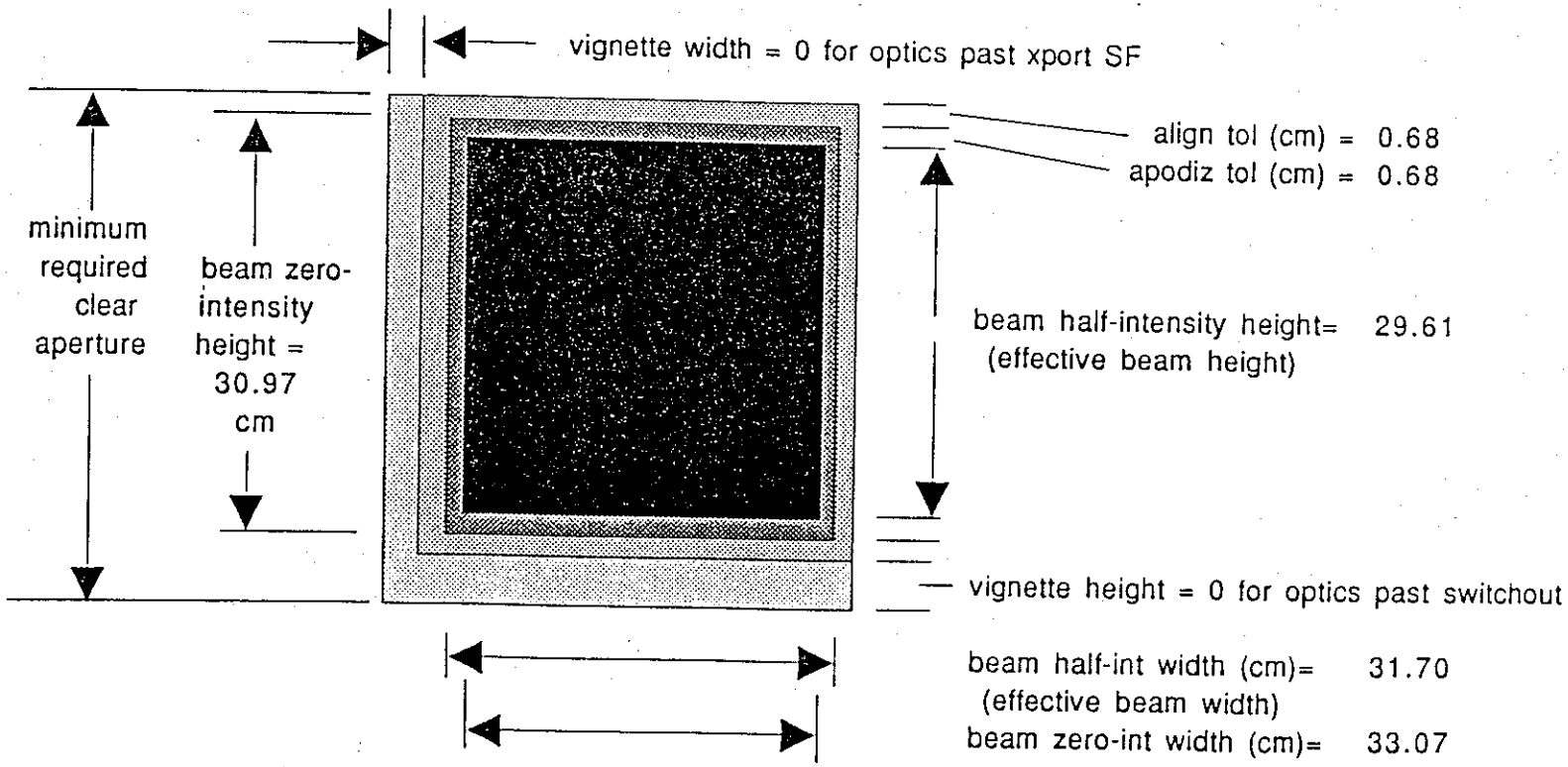

2 Laser Slab Issues: Amplifier slab allowances viewed normal to the slab

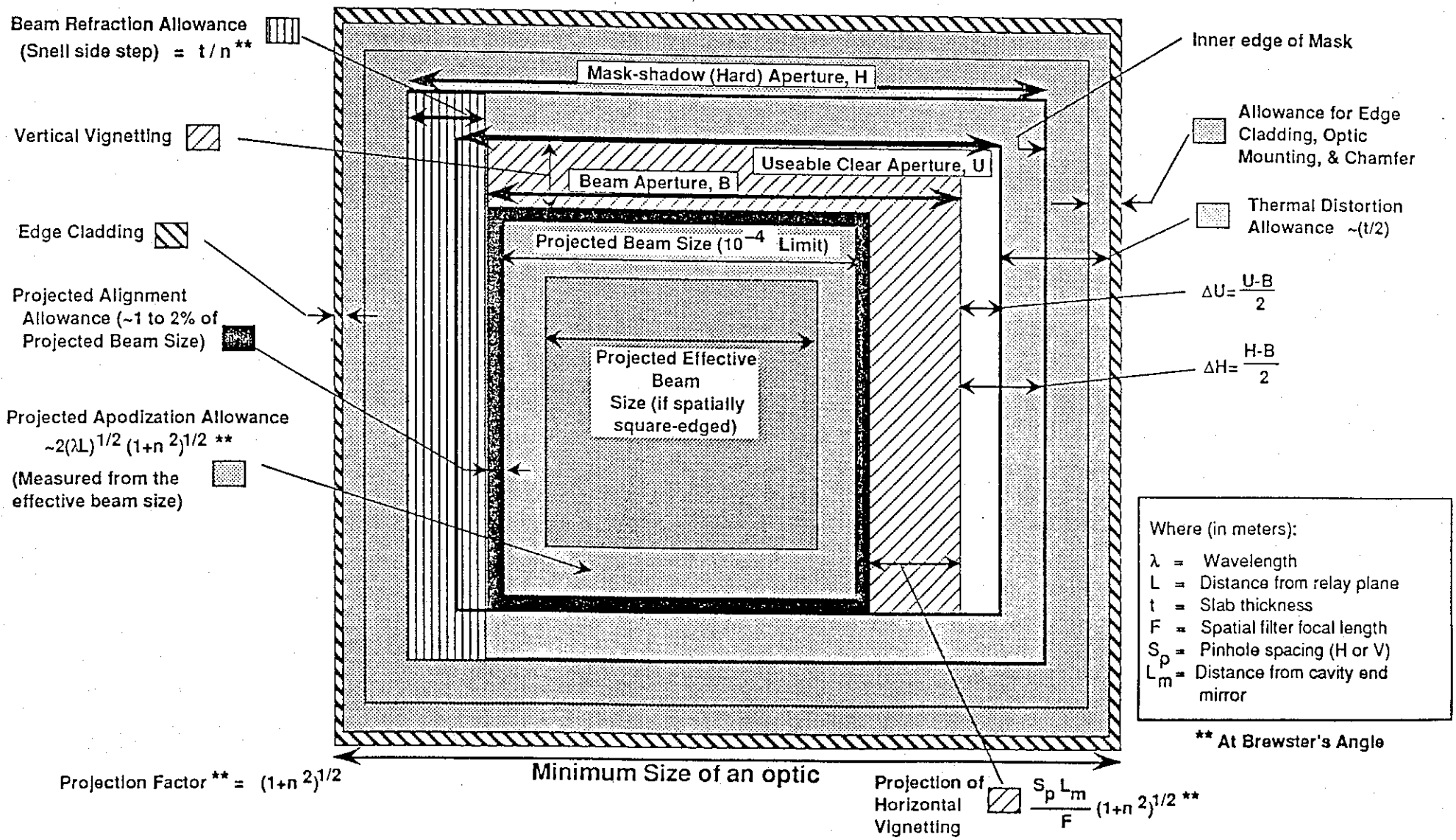

N. Frank
2/24/93
Gotchas vg no. 4

CHAINOP code

Given a basic design and cost algorithms, varies

- numbers of slabs in amplifiers
- disk thickness
- length of spatial filters
- (aperture)

within limits for damage, front-end requirements, etc.
set by the operator

► Contains models for nonlinear noise growth, saturation, pulse-length-dependent damage, etc.

► Current cost algorithms are derived from the cost estimate for the LDB entry point design

► Documented in the LDB report

LDB Design Assumptions for Laser Fluence Limits

CHAINOP has a pulse-length-dependent model.
Average fluence is lower by peak/average ratio,
which is calculated from noise growth model.

	Component	Safe peak working fluence J/cm^2 at 3 ns Beamlet demo.	LDB entry point
1ω	Mirror	18	21
	Polarizer	14	19
	KDP bulk	24	34
	AR surface	29	34
3ω	KDP bulk	11	16
	AR surface	13	15.5

LDB entry point design assumes that the 0.85 and 0.7 derating factors applied to measured damage thresholds to determine Beamlet Demonstration Project design values are not necessary.

V30805-7

Typical design tradeoffs

Amplifier aperture

Large -- more energy, less edge effects

Small -- higher energy density, longer storage lifetime, less glass, (better gain uniformity)

Slab thickness

Large-- better energy per cm^2 , longer storage lifetime, (better gain uniformity)

Small-- higher energy density, less glass

Typical design tradeoffs: Amplifier split

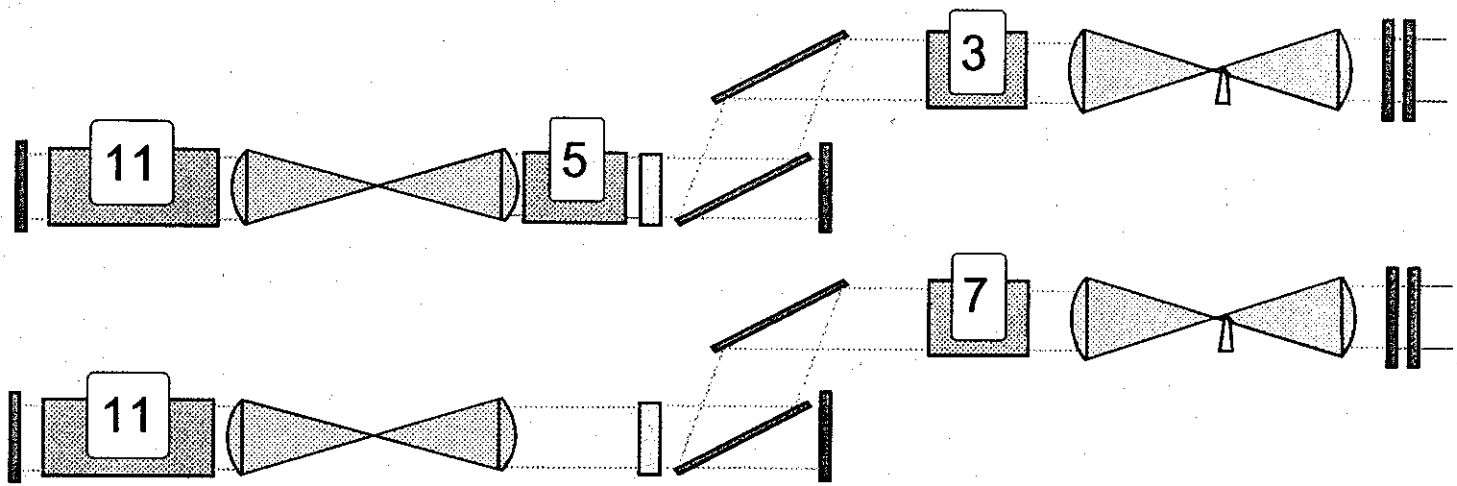

All disks in booster:
- + low fluence on polarizer
- + slightly better beam quality

Split amplifier:
- + smaller front end
- + smaller vignetting allowance
- - more gain in multipass for ghosts and parasitics

CHAINOP will put as many disks in the multipass as it can without damaging the polarizer.

V30809-3

CHAINOP can be used to explore design sensitivities

(Where do we put development money for best return?)

Only preliminary results so far, discussed in LDB report

- High leverage:
  - Efficient transport and frequency conversion
  - Efficient amplifier pumping
  - Larger aperture per beamlet
- Intermediate leverage:
  - Lower nonlinear index of glass
  - Lower laser gain cross-section
  - Cost of bulk laser glass
  - Amount of few-mm-period phase noise on the beam
- Low leverage:
  - Bulk and surface loss of laser glass

NIF entry point design

compared to Nova and the Beamlet Demonstration Project baseline design

1ω irradiance and fluence

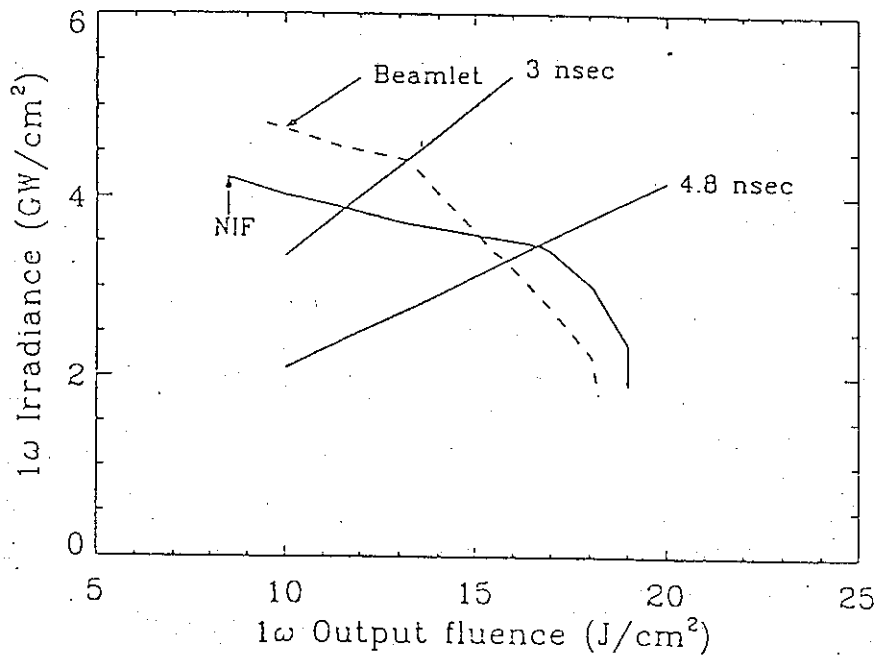

1ω power and energy

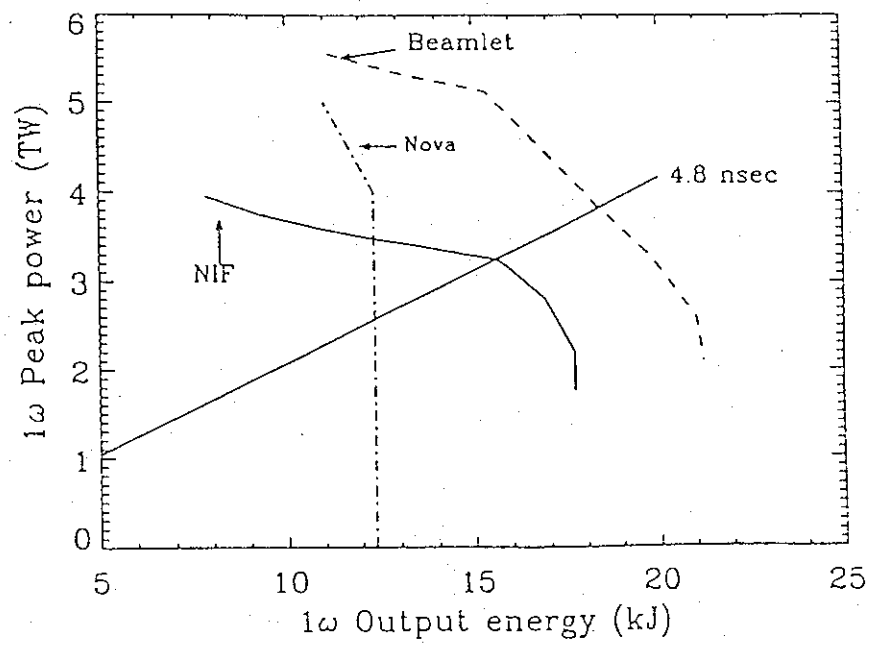

Equivalent square pulse

Saturation and energy extraction are independent of shape, depend only on fluence.

If a pulse is peaked at the end, then nonlinear effects depend on final peak power.

Then a square pulse containing the same energy as the shaped pulse and rising to the same peak power has the same extraction and nonlinear effects.

Inefficient frequency conversion implies 1ω pulse looks longer than 3ω pulse.

Damage: slightly conservative if based on fluence.

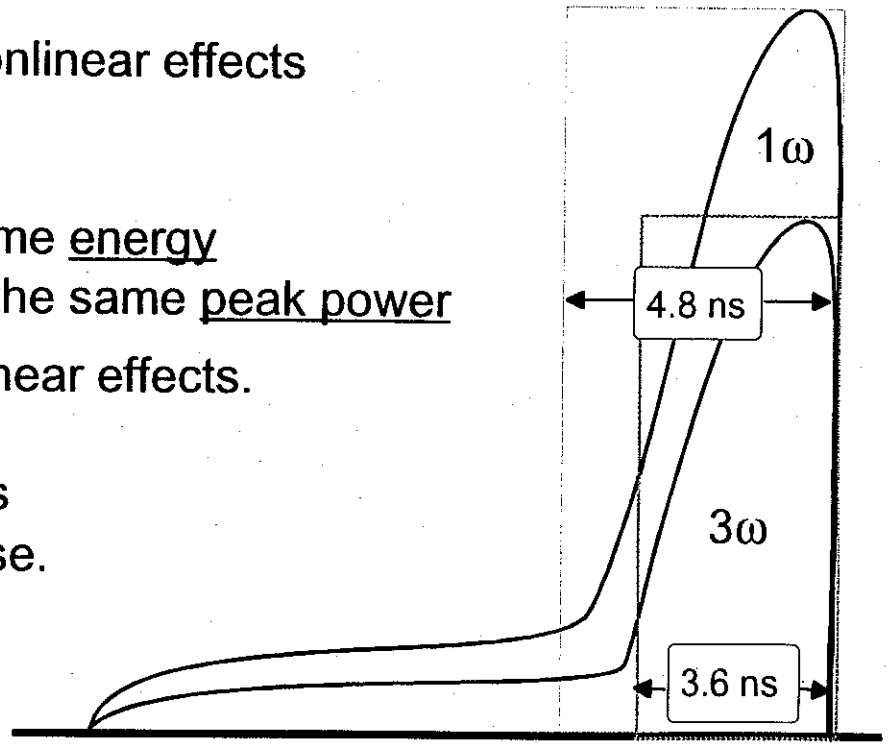

Entry point design:
Frequency conversion

Conservative: Full-aperture, shaped-pulse conversion
Nova-like performance from frequency converter
peak η 70%, energy η 52%, equivalent square pulse 4.8 ns

Nominal: Full-aperture, shaped-pulse conversion
95 % of calculated performance of current converter design
peak η 80%, energy η 58%, equivalent square pulse 4.2 ns

Optimistic: Combination of subaperture conversion,
picket fence modifications to the foot of the pulse,
and/or more complex converter design
peak and energy η 75%, equivalent square pulse 3.6 ns

The effect of low conversion efficiency on beamlet output

Longer pulses allow significantly greater energy
Low frequency conversion efficiency lengthens the effective pulselength
Effect on 3ω output energy is less
than energy conversion efficiency might suggest.

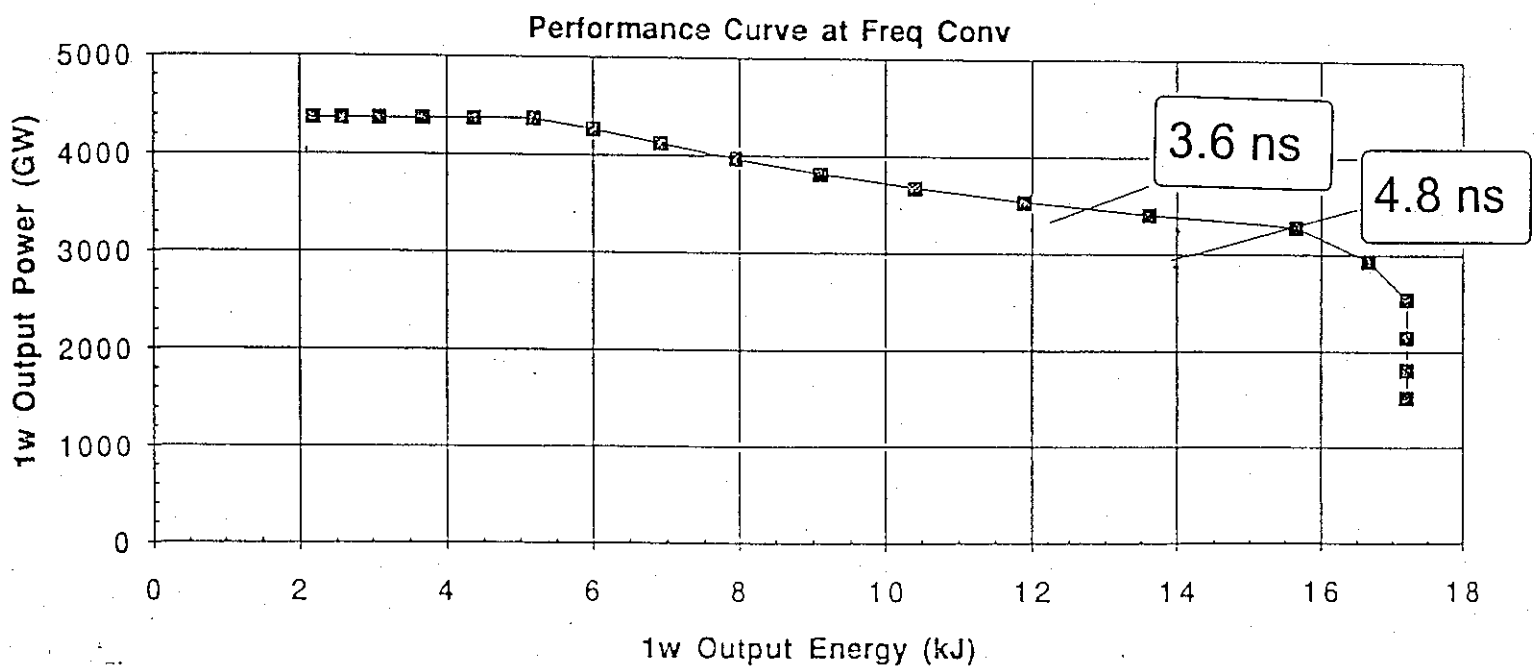

V30806

Conversion and transport

	Conservative	Nominal	Optimistic
Frequency conversion	52%	58%	75%
Kinoform	85%	91%	91%
3 ω Transport	86%	92%	95%
Energy on target / 1 ω laser energy	38%	49%	65%

Safe system design:

Meet 1.8 MJ requirement with conservative assumptions.
(20-25% design margin for nominal projections)

Proposed figure tolerances for optical components

Peak-to-Valley at 1μm, measured and reported as for Nova optics.

Laser disks	70 % of order <λ/10 in transmission, remainder <λ/5
Lenses	<λ/10 in transmission (Cavity SF)
Mirrors	<λ/4 in reflection (λ/8 surface flatness)
Windows	<λ/10 in transmission switch windows
KDP crystal	<λ/4 in transmission
Polarizer	<λ/10 in transmission, <λ/2 reflection (λ/4 surface flatness)
Debris shield	<λ/2 in transmission

Projected beam divergence on target:
±25 μr for Beamlet 11-0-5, cavity filter injection
±30 μr for NIF11-5-3, transport filter injection

NIF requirement ±35 μr
(set by target spot size)

V3060212

Pump-induced wavefront distortion

~±100 μr for LDB entry point design: requires compensation to meet NIF beam divergence requirement of ± 35μr

Possible correction techniques:

- Tilt spatial filter lenses
  - least expensive
  - introduces other aberrations
  - may complicate ghost control
- Figure cavity mirror to compensate
  - not expensive
  - complicates alignment
  - full compensation only at a single amp operating point
- Adaptive optics
  - most flexible
  - can allow looser tolerance on components
  - most expensive

NIF amplifier will be constructed from basic assembly units similar to the Beamlet design

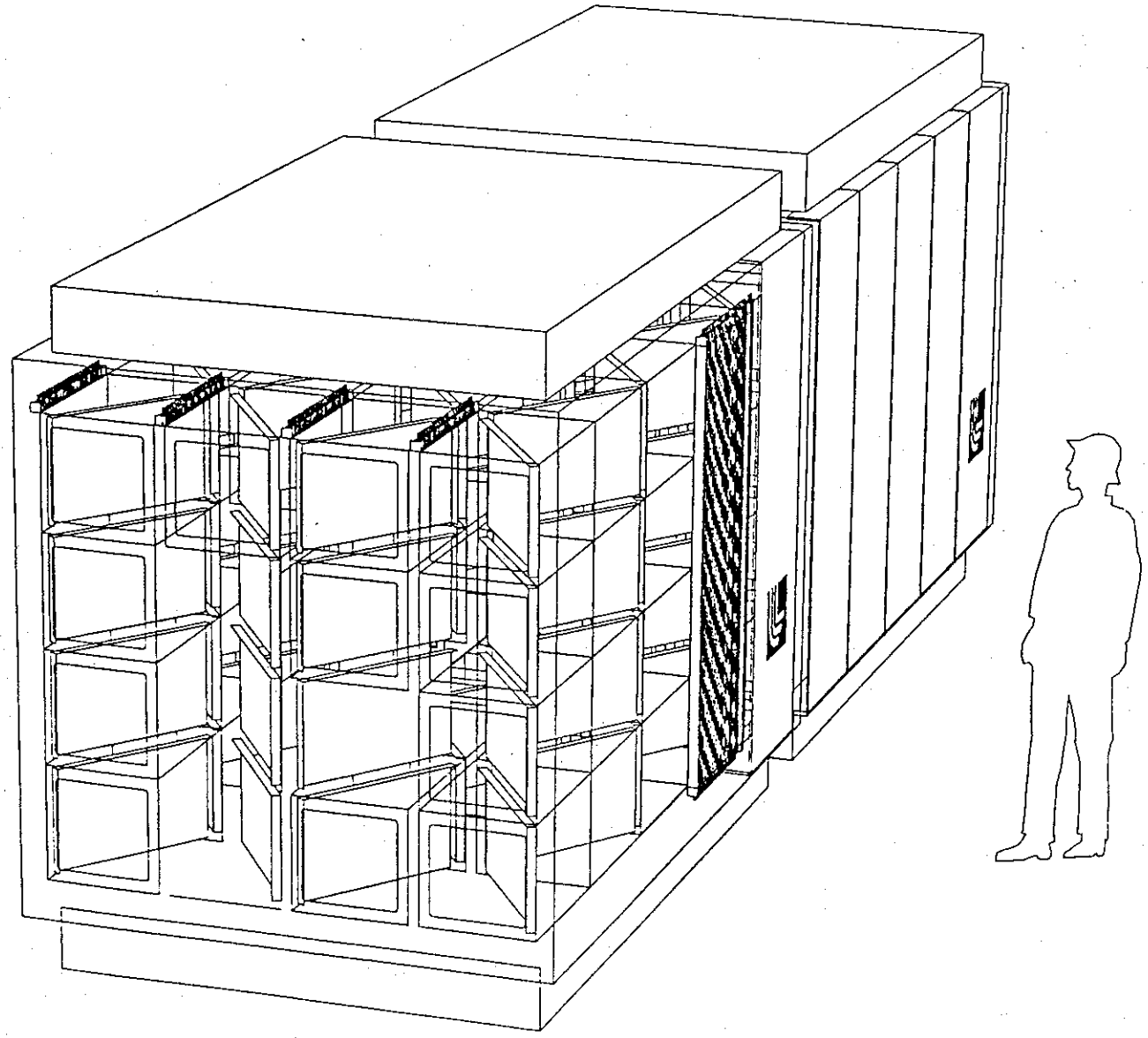

Increasing the number of beamlets per NIF Grouping dramatically reduces the mechanical costs

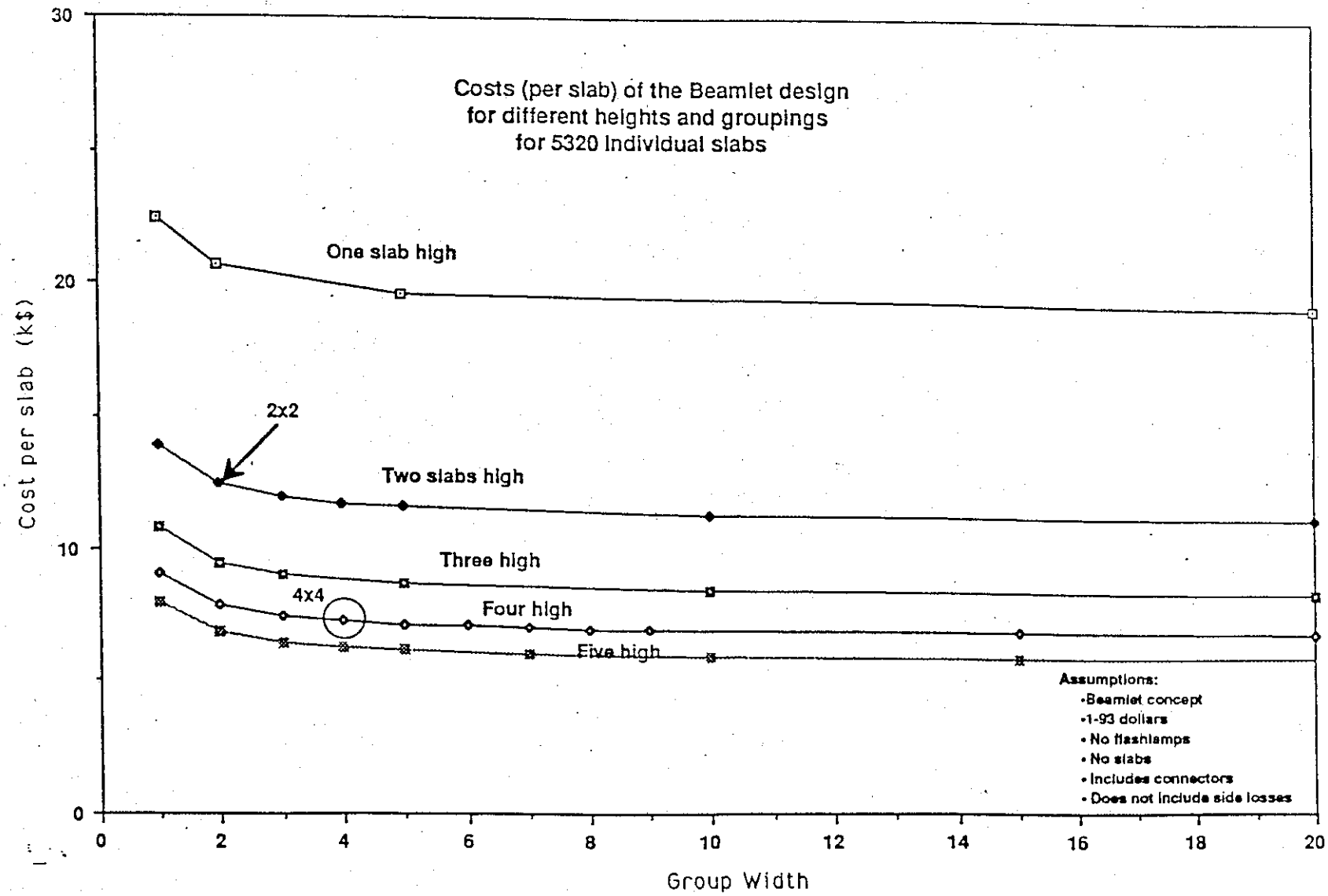

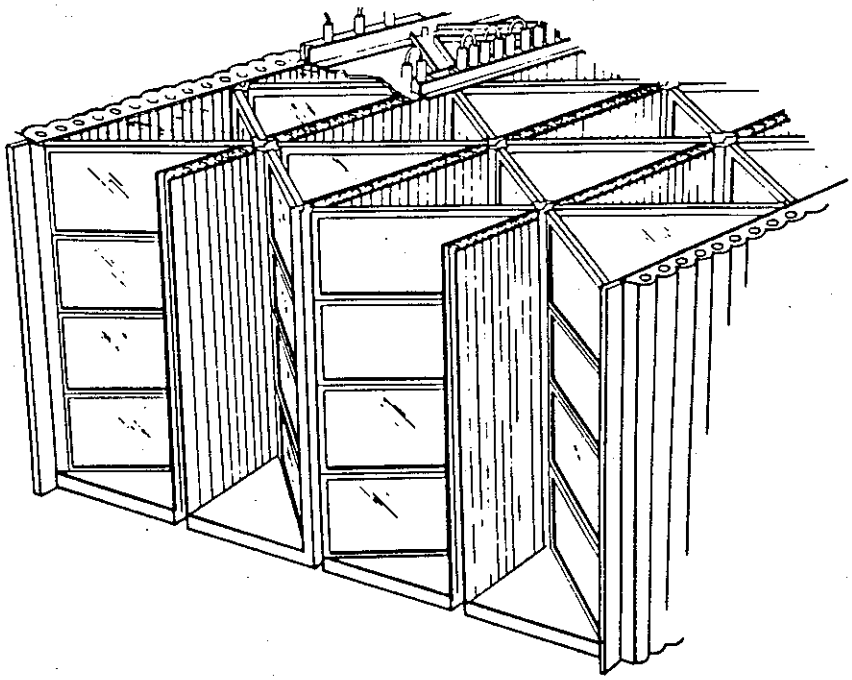

Cut-away view

Slice-of-bread

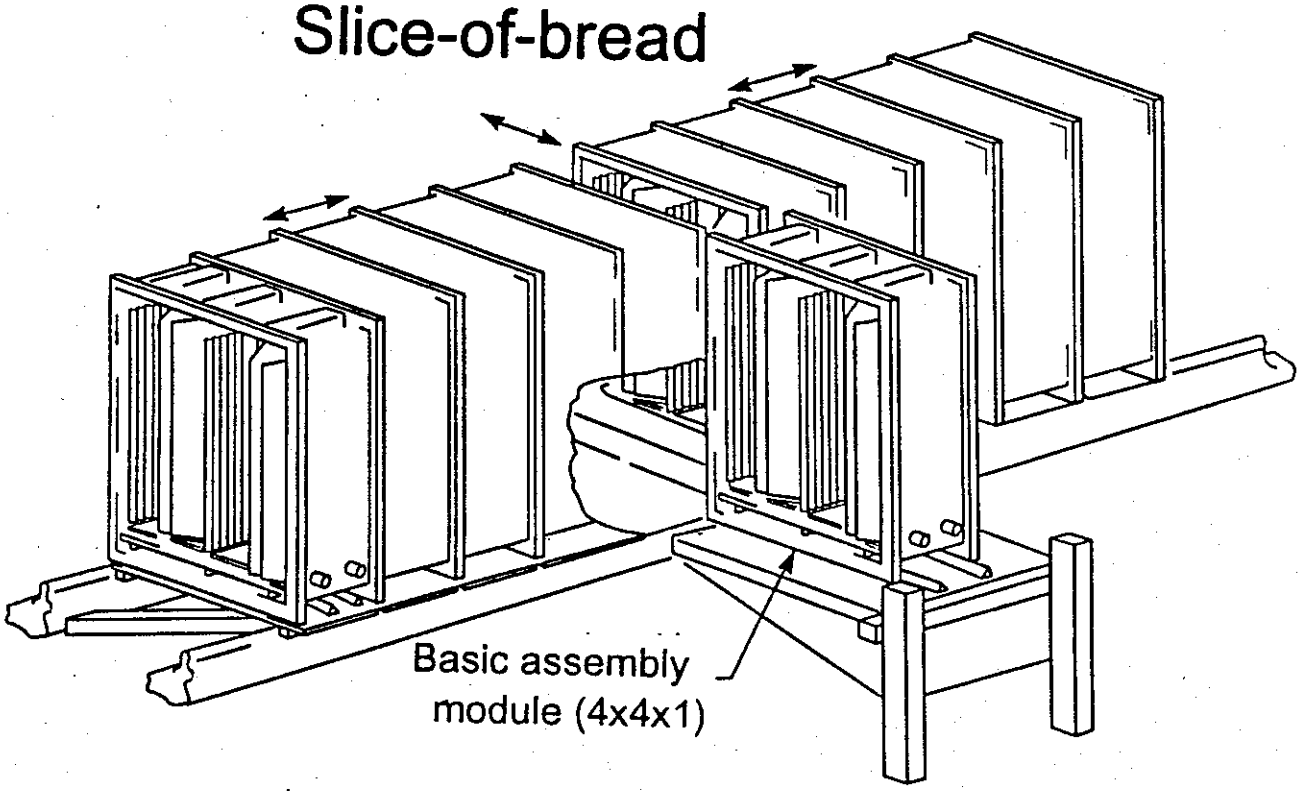

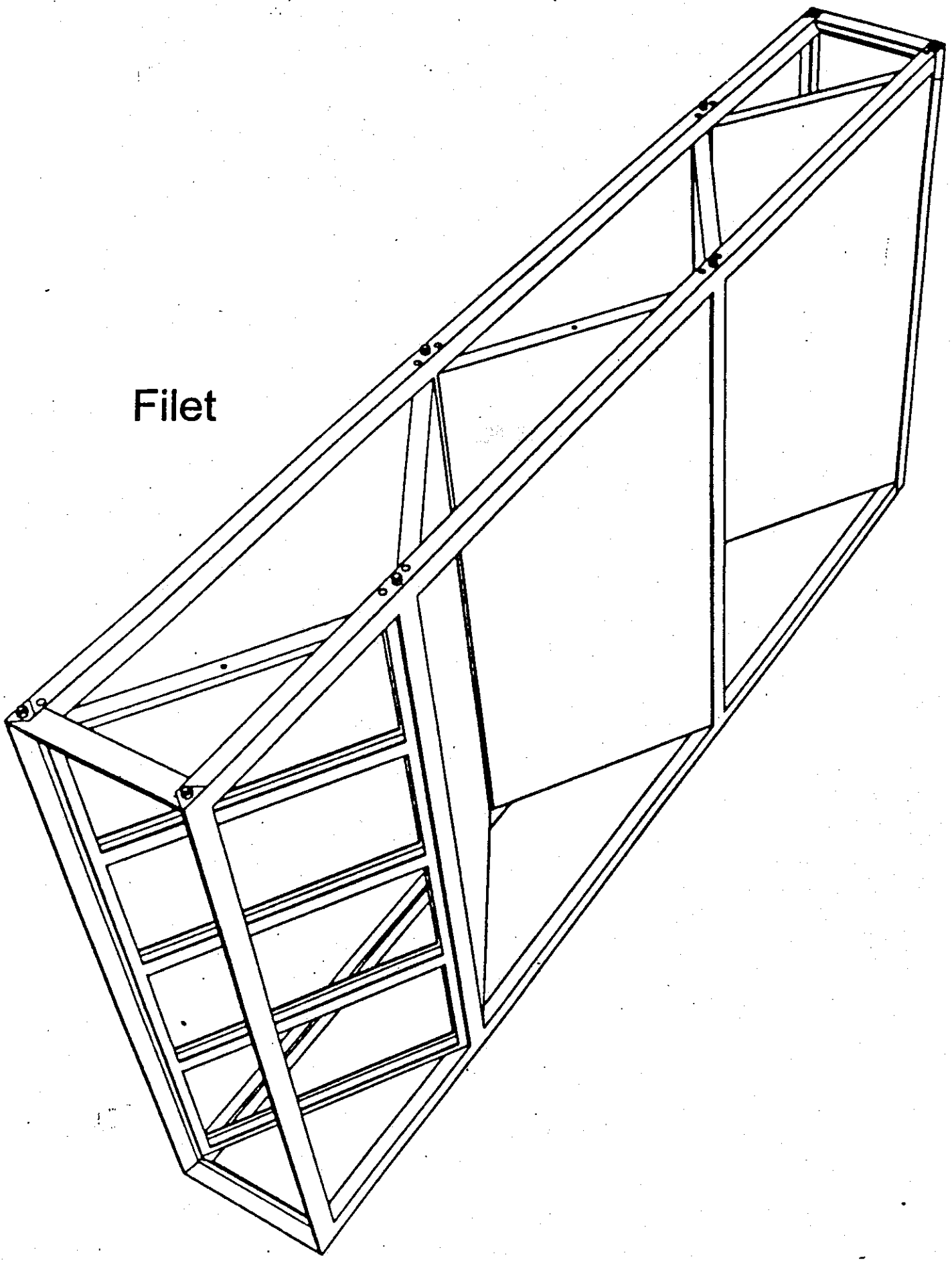
Filet

4. Slab and flashlamp-cassette replacement can be performed quickly and cleanly

Monolithic with Basic Assembly Unit

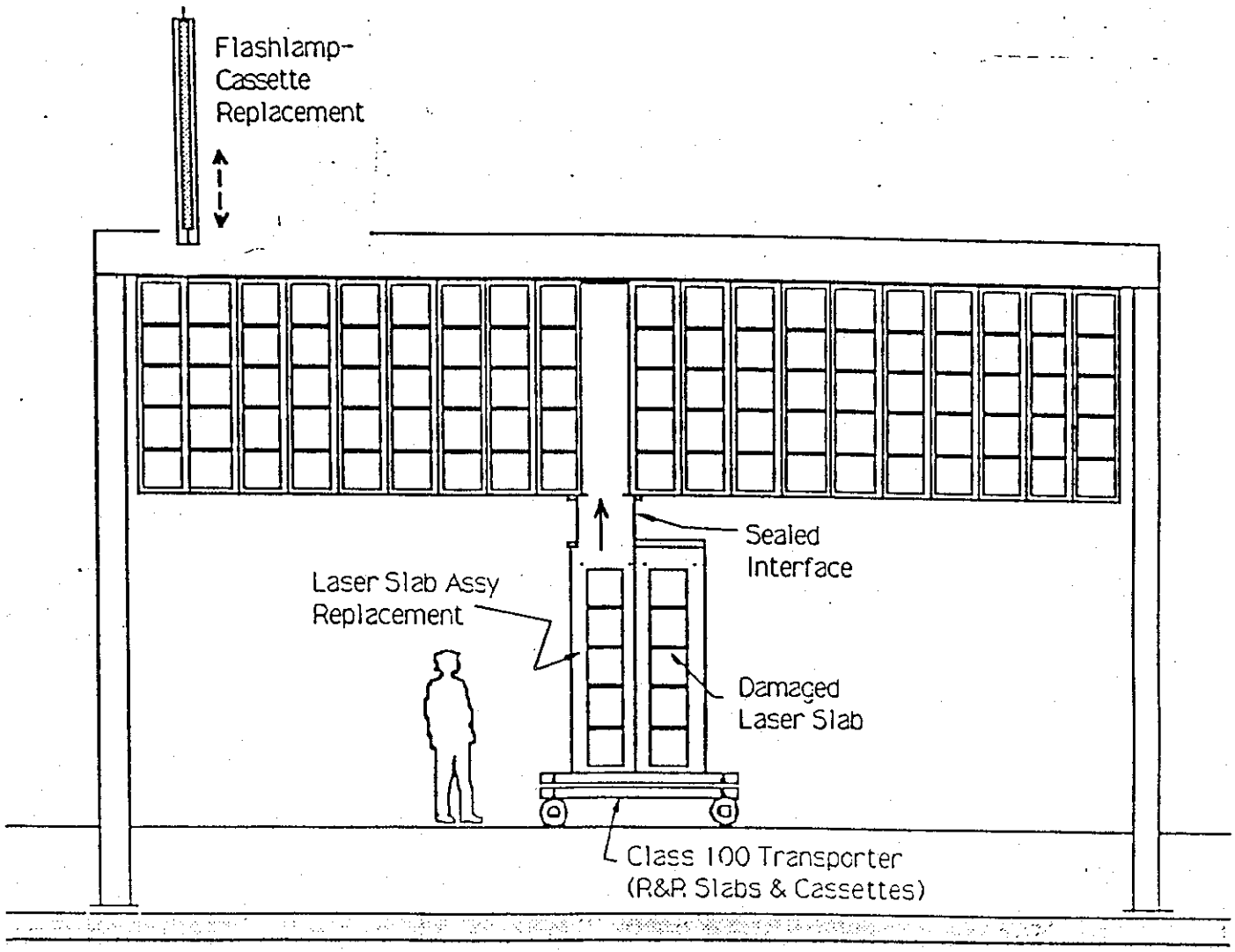

Spatial filter will utilize standard vacuum vessel technology and design

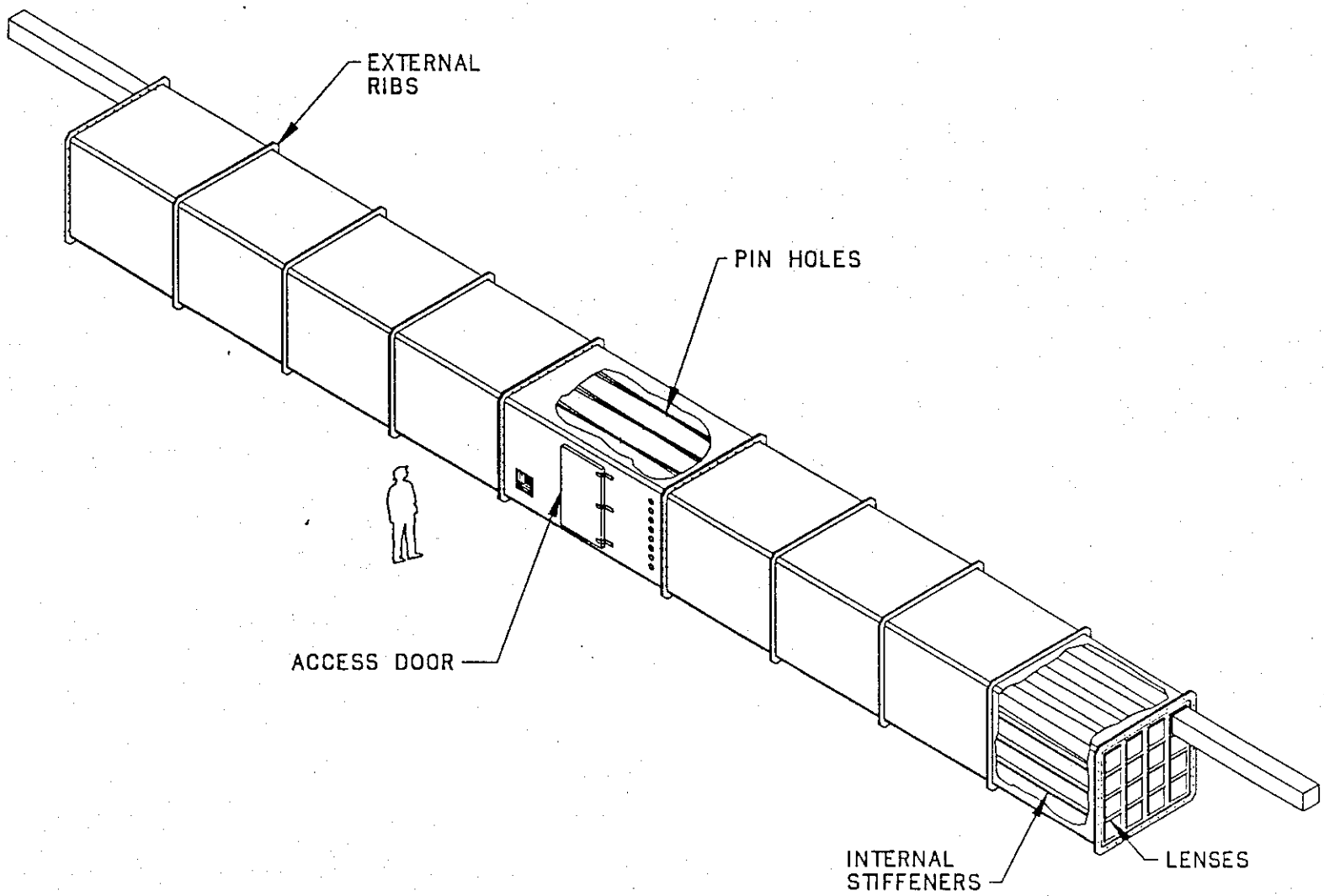

N optical switch will utilize Pockels cell design packaged into 1x2 modules and stacked in large arrays

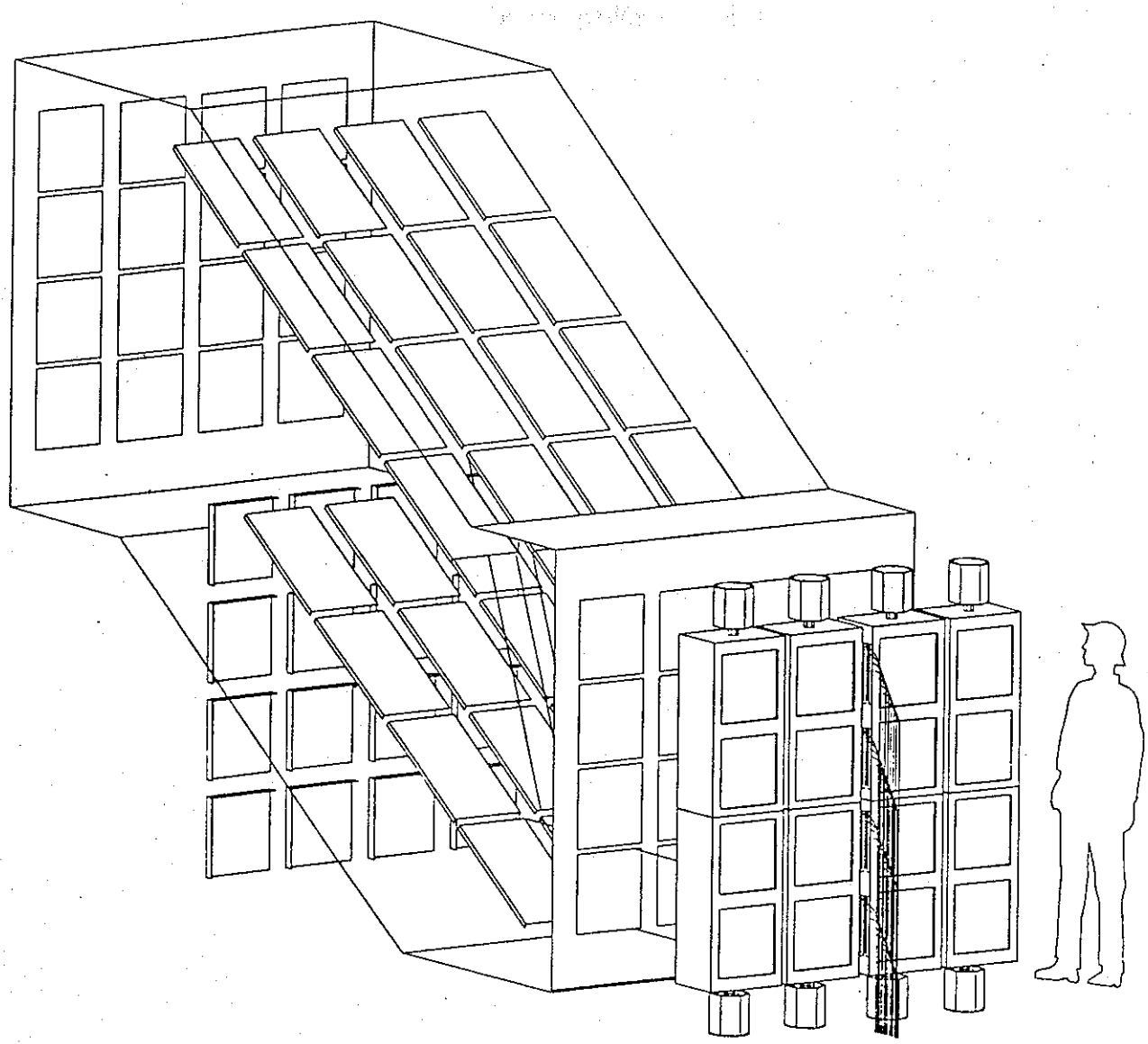

Pulse generation architecture provides flexibility to customize individual pulses to compensate for beamlet-to-beamlet variations

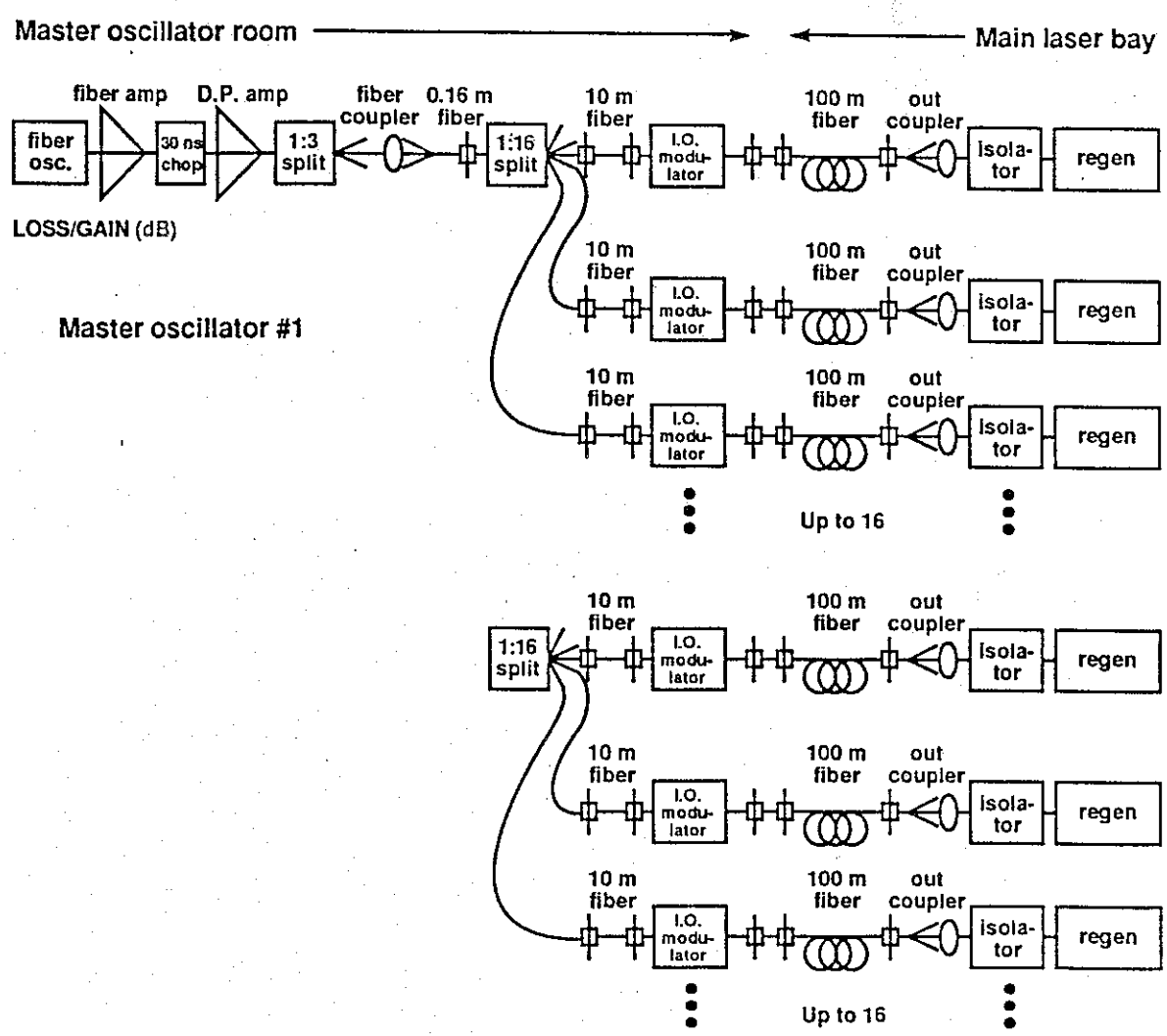

Pulse generation modules can be packaged into compact (4m x 0.5m x 0.5m) assembly units

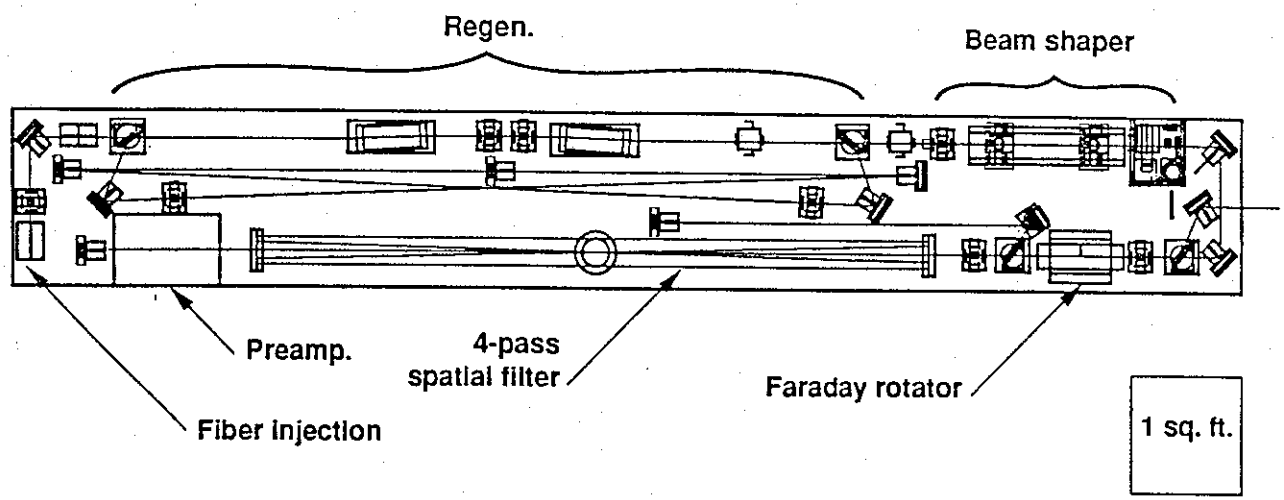

Alignment and diagnostic hardware for the multipass amplifier system has been defined

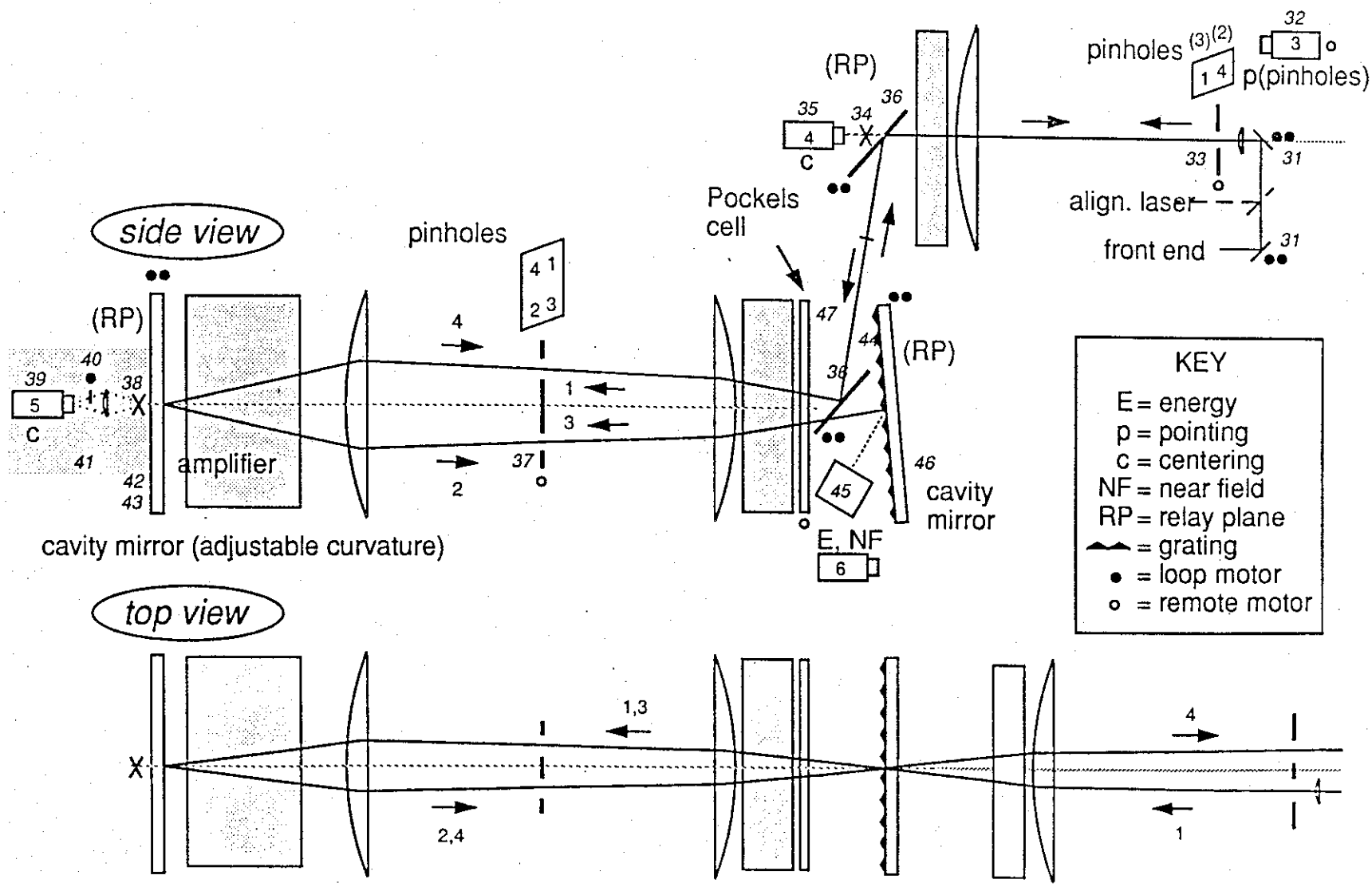

Target area alignment

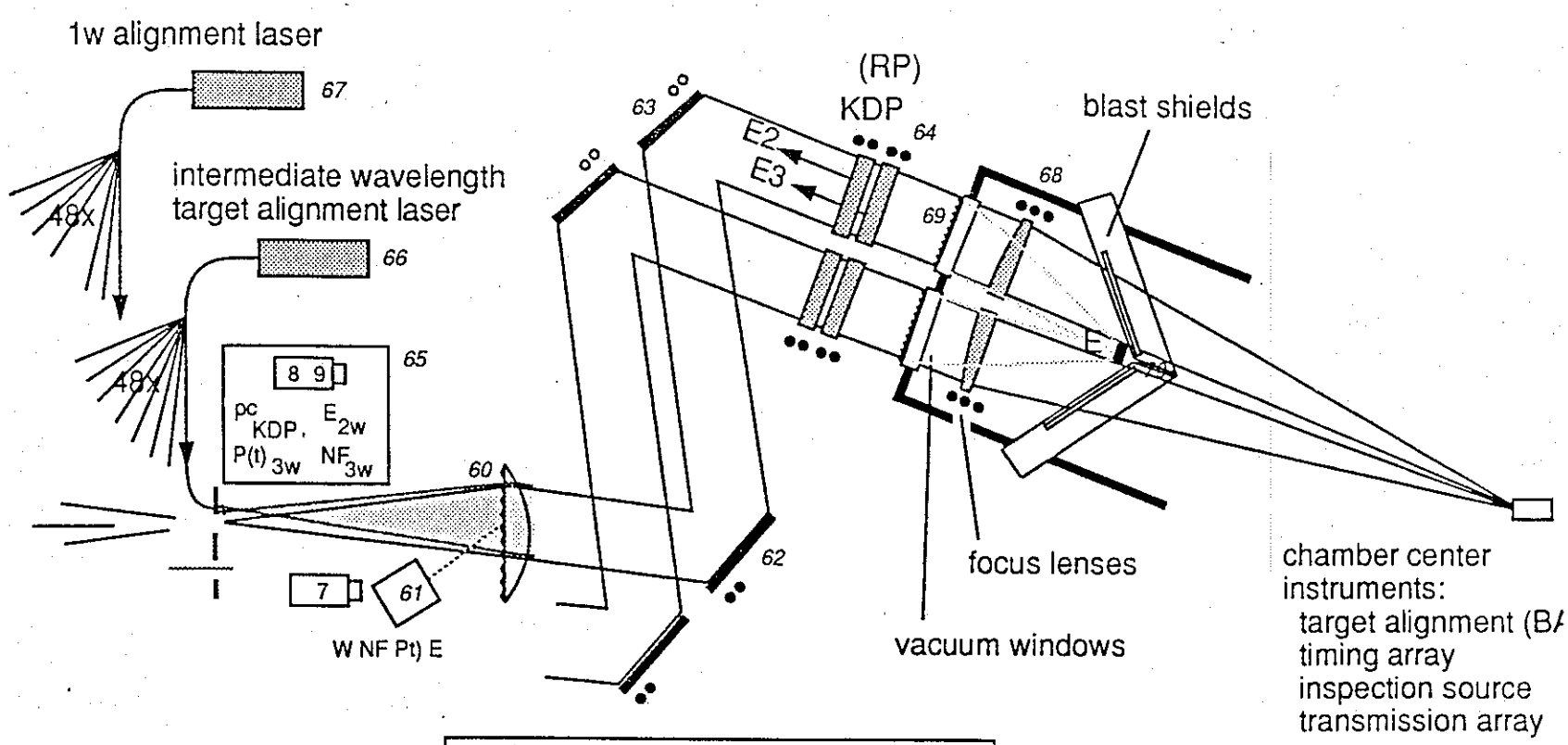

KEY

P(t) = power	E = energy
W = wavefront	p = pointing
= grating	c = centering
= loop motor	NF = near field
= remote motor	RP = relay plane

Control system architecture

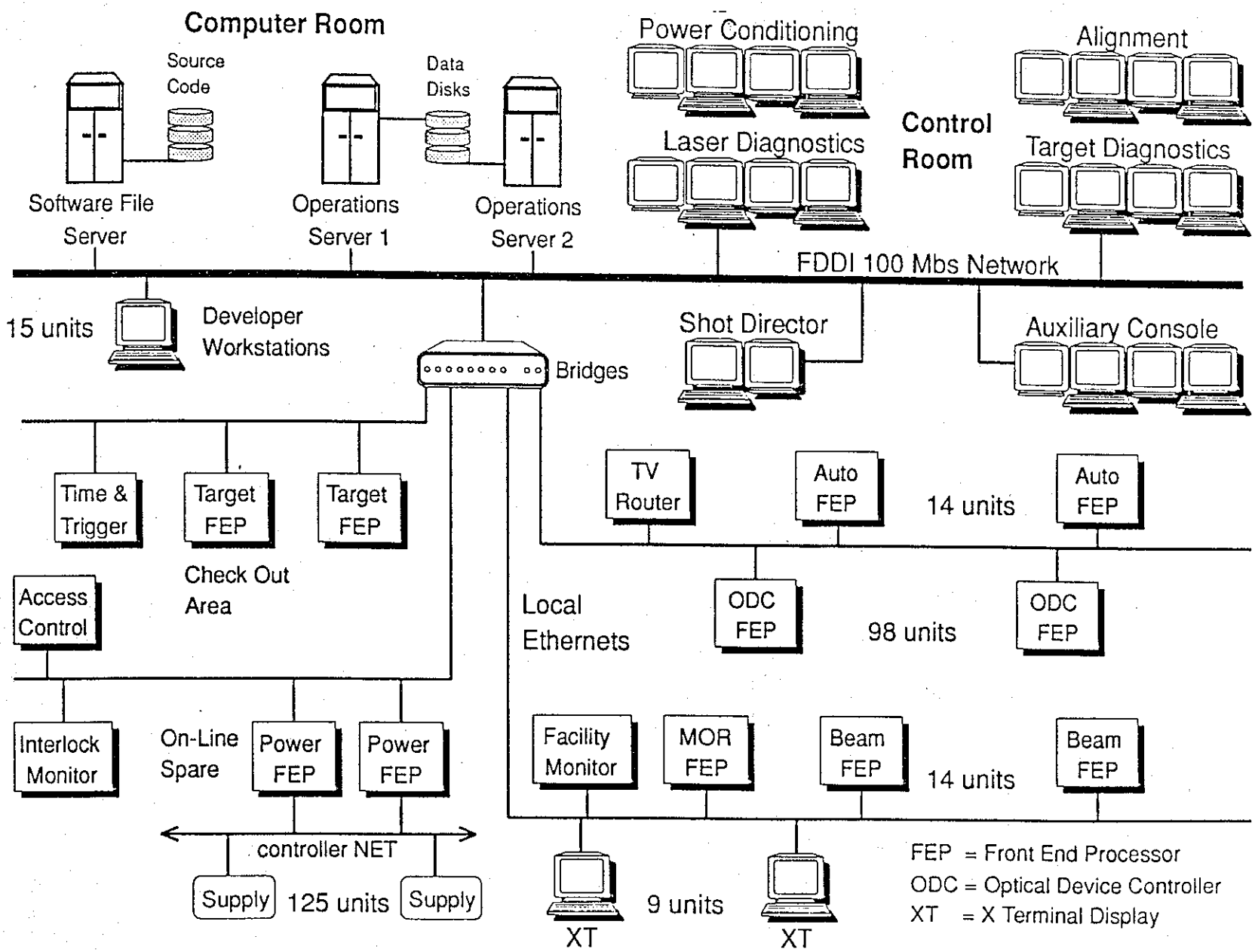

LDB laser only cost estimates for NIF

Include:

All laser hardware, space frames, etc.
All design and assembly labor with burden
Laser optics, mounts, controls, diagnostics in target area

Do not include:

Balance of target area
Building
Project office
Contingency, Escalation, Site taxes

(Required, but not included in project:)
(support facilities)
(prototypes and development (internal or external))

V3080611

LDB entry point design: performance and laser cost

Amp. Config.	Aperture cm	1ω output per blt. kj@4.8 ns	kj@3.6 ns	# blts.	MJ on target Conservative	Optimistic	laser cost M$
Optimize with preliminary cost algorithms, cost with new cost algorithms							
11-5-3	35	15.7	12.8	192	1.2	1.6	337
				288	1.8	2.4	480
Reoptimize with new cost algorithms, shorter pulses:							
11-3-3	35	15.7	14.3	192	1.2	1.8	326
Increase aperture to meet 1.8 MJ with nominal conversion/transport:							
11-5-3	39	20.8	16.6	192	1.5	2.1	361

V3080612

"High Risk" 1.8 MJ NIF

- 192 beamlets
- Aperture >35 cm to increase design margin
- 1.8 MJ output is achievable using nominal conversion/transport will require careful tuning
- < 1.8 MJ with conservative assumptions

- Laser cost (using LDB assumptions)
  ~$330M at 35 cm, ~$360M at 39 cm

(Bottom up in all areas rather than top down)
(Features have been added: costs not scrubbed)

240 Beamlet NIF

Why?

- Design margin
- Easily extendable to direct drive
  (60 2x2 beam clusters,
  Omega Upgrade illumination geometry)

Liabilities:

- More expensive
- Needs larger building
- Awkward with (4x4) beamlines (15- does not split evenly)

► Design with 5 (4x6) beamlines or 1 (4x30) beamline each side
Choice to be based on: beam transport layout
operational convenience

240 Beamlet NIF

Amp. Config.	Aperture cm	1ω output per blt. kj@4.8 ns	kj@3.6 ns	# blts.	MJ on target Conservative	Optimistic	laser cost M$
Optimized performance/cost design (optimized at 4.8 ns)							
11-5-3	38	19.6	16.8	240	1.8	2.5	421
Beamlet Demonstration Project design (optimized at 3 ns)							
11-0-5	39	20.2	18	240	1.9	2.8	449

- $60-100M cost increase from 192-beamlet designs
- Easily exceeds 1.8 MJ with conservative assumptions
- 20-25% design margin for nominal assumptions
  (note that costs assume development program-
  not raw BDP hardware costs)

V3080615

Amplifier hardware cost comparisons

	Nova (1982)	Beamlet actual	Beamlet with development	NIF projection
Pulsed power	$87	$18	$12	$8
Glass	$76	$42	$21	$14
Flashlamps	(in p.p.)	$5	$5	$3
Mechanical	(1x1) $41	(2x2) $12	(2x2) $12	(4x4) $9
Cost per red joule delivered to the tripler	$204	$77	$50	$34

V30810-1

Overhead, Contingency, Escalation, and Taxes

Overhead included in LDB cost estimate: 30% on all labor

Not included in LDB laser cost estimate:

• Contingency:	15-35% on total cost
• Escalation:	1.9-3.4% per year
• Supplies and Equipment:	10-20% on all labor
• Procurement tax:	0-12% on all material procurements

(typical ranges shown)

Which configuration do we choose as baseline for the CDR?

240 Beamlet NIF

- Nominal output ~2.1 MJ with full aperture pulse shaping
- Meets 1.8 MJ requirement with conservative assumptions

LDB laser only cost $420-450M

192 Beamlet NIF

- Can reach 1.8 MJ with nominal assumptions, not with conservative

LDB laser only cost $330-360M

We believe that the 240 Beamlet case should be the baseline

Costs from the LDB study are preliminary and have not been carefully reviewed. Reliable cost numbers will not be available until the CDR is completed.

Summary: LDB study

- First pass bottom up conceptual design of the NIF laser
- Documentation and cost accounting systems established
- Baseline configuration recommended