UCRL-TR-123658
PREPRINT

Six DOF Sensor

C. Vann

This paper was prepared for submittal to
R&D Magazine

March 1996

Lawrence Livermore National Laboratory

This is a preprint of a paper intended for publication in a journal or proceedings. Since changes may be made before publication, this preprint is made available with the understanding that it will not be cited or reproduced without the permission of the author.

VAULT REFERENCE COPY

1996 R&D 100 Award Entry

SixDOF Sensor

Submitted by

Charles S. Vann

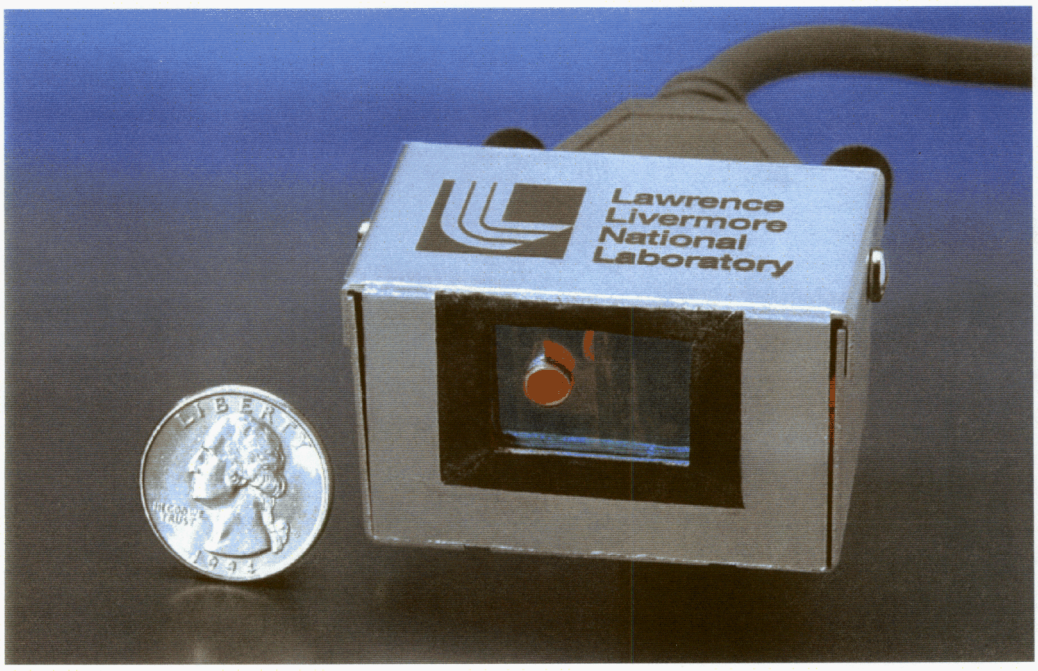

This small, non-contact optical sensor increases the capability and flexibility of computer controlled machines by detecting its relative position to a workpiece in all six degrees of freedom (DOF). At a fraction of the cost, it is over 200 times faster and up to 25 times more accurate than competing 3-DOF sensors. Applications range from flexible manufacturing to a 6-DOF mouse for computers.

*This work was performed under the auspices of the U.S. Department of Energy by Lawrence Livermore National Laboratory under contract No. W-7405-Eng-48.

1996 R&D 100 AWARD ENTRY FORM

1. Submitting organization Lawrence Livermore National Laboratory
Address 7000 East Avenue
City Livermore State CA Zip 94551 Country USA
Submitter's name Charles Vann
Phone 510-423-8201 FAX 510-422-1930

AFFIRMATION: I affirm that all information submitted as a part of, or supplemental to, this entry is a fair and accurate representation of this project.
Submitter's signature _____

2. Joint entry with (list additional submitters on a separate sheet and check here ❑)
Organization _____
Address _____
City _____ State _____ Zip _____ Country _____
Submitter's name _____
Phone _____ FAX _____

3. Product name SixDOF sensor

4. Briefly describe what the entry is (e.g. balance, camera, nuclear assay, etc.).
This non-contact, optical sensor enables a computer controlled machine to detect its relative position and orientation to a workpiece in all six degrees of freedom (DOF). It is much faster, more accurate, and priced significantly lower than competing sensors which have only 3-DOF capability.

5. When was this product first marketed or available for order? Month October Year 1995

6. Inventor or Principal Developer Charles Vann
(List additional developers on a separate sheet in an appendix and check here ❑)
Position Deputy Program Leader Organization Laser Science and Technology
Phone 510-423-8201 FAX 510-422-1930

7. Product price **$5000** If the price is proprietary, list it and check here _____

8. Do you hold any patents on this product? (Documents first version) Yes X No _____
Do you have any patents pending? (Documents new version) Yes X No _____
Do others hold patents on this product or a similar product line? Yes _____ No X

9. Describe product's primary function:

Introduction: The SixDOF sensor attaches to a computer controlled machine and enables the sensing of all six degrees of freedom (DOF) relative to a workpiece. It accomplishes this by emitting a laser beam and detecting the reflection off references mounted on the part. Inside the sensor, the beam is split and directed onto three photo diodes (see Figure 1). The analog signals from the diodes are digitized and fed into a computer which can instruct corrective action for a machine or output position readings. See Appendix A for a detailed description of the sensor.

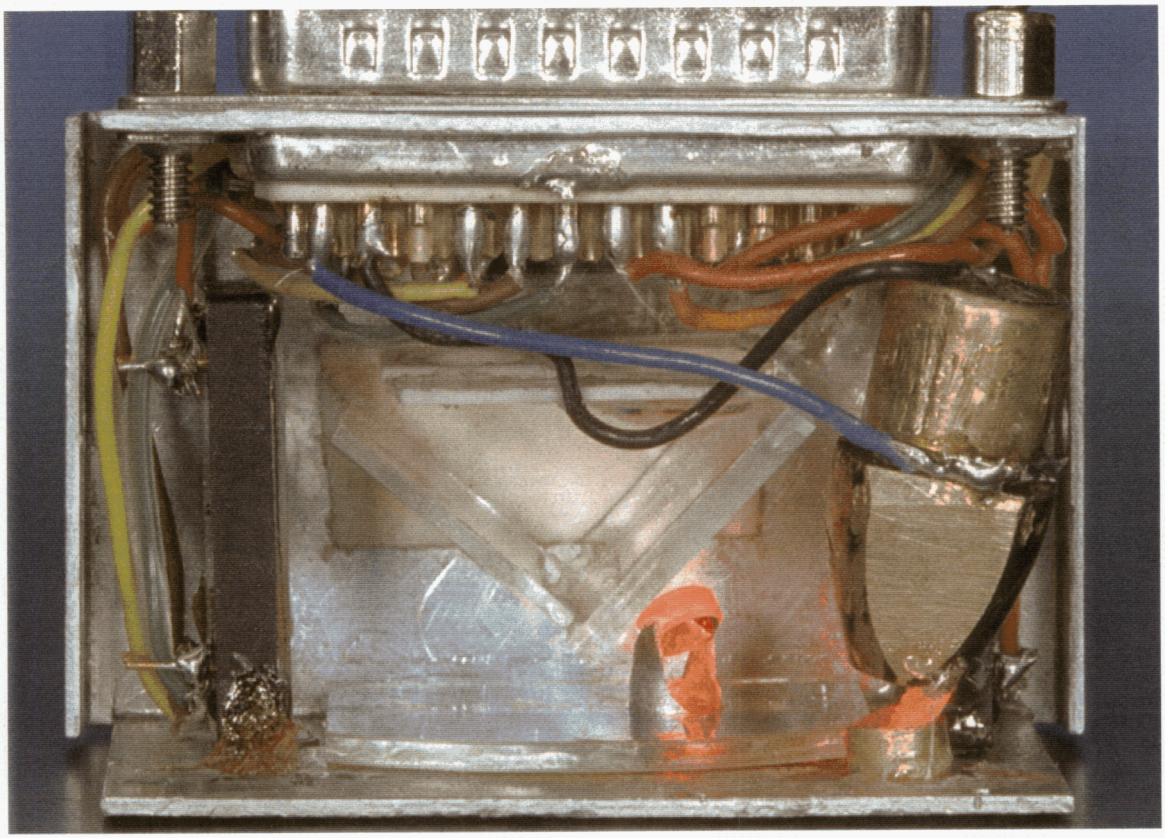

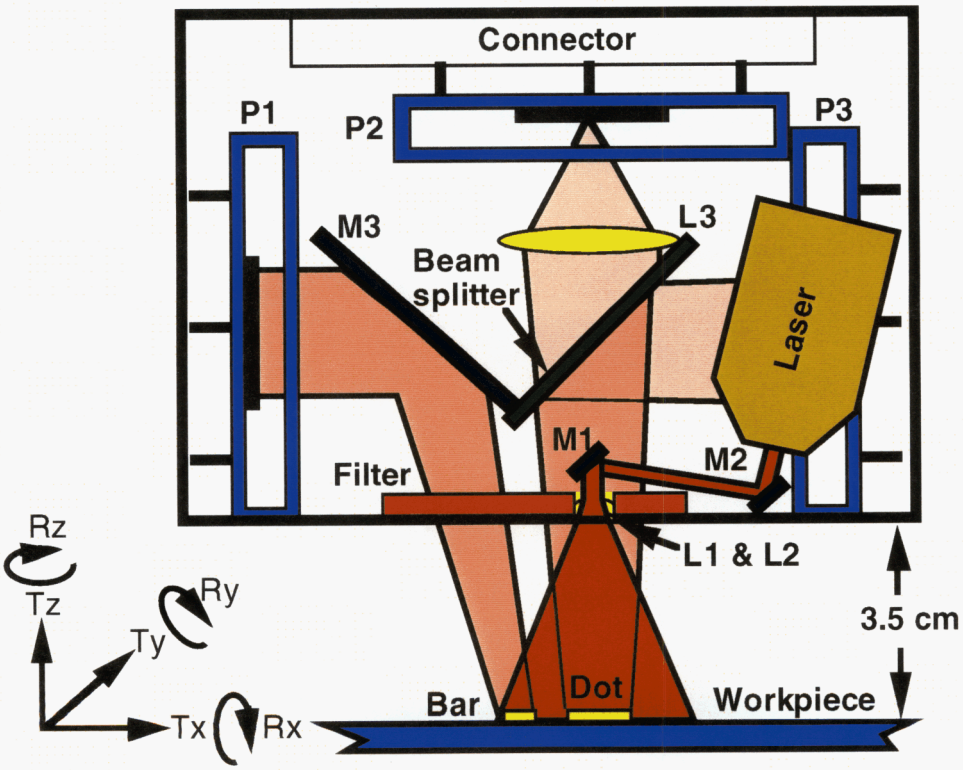

Figure 1. Inside the sensor, light reflected from references is directed onto three photo diodes

Background: In today's flexible manufacturing operations, much time and money are wasted when changes have to be made in the manufacturing process. For example, if a minor modification is made to the shape of a car door and a robot is used to weld that door, the robot must be "taught" the new shape by an operator. That is, the operator must guide the robot tool by hand through each motion and every orientation in the welding operation. Besides being time consuming, this process is often inaccurate. It is also expensive because this is down time for both the robot and the operator. Furthermore, every part must be positioned exactly where the robot expects it to be, requiring the use of expensive sensors and positioning devices.

How the SixDOF sensor makes a manufacturing robot smarter: Since the SixDOF sensor is small, it can be located on the tool head of a multi-axis manipulator and track reflective references on the workpiece (see Figure 2). Once the robot knows where it is relative to the part, the computer can instruct the machine to follow a 6-DOF path pre-described in multi-dimensional computer drawings of the part, or it can be programmed to follow a path of references mounted on the part. Either way, the robot autonomously follows the path, performing its machining task - even if the path is significantly different from its last operation.

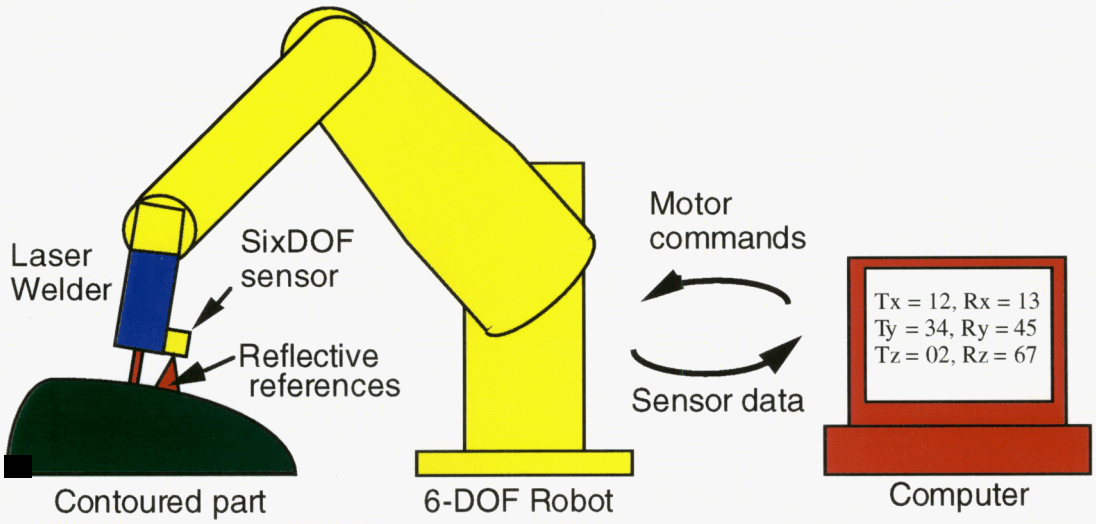

Figure 2. A SixDOF sensor guiding a robot as it laser welds a contour part

Product advantages:

• *Eliminates need for machine "training".* With a SixDOF sensor and 3D information on the part, the robot's path and tool orientation can be written in software and any changes to the process can be made by downloading new software, avoiding the need for "training" by an operator.

• *Enables process changes without halting production.* Since software can be downloaded quickly into a robot's controller, production is not delayed.

• *Avoids precise positioning of parts in the workplace.* As long as the reflective references come into the sensor's field of view, the sensor can determine its relative position. Since its field of view is many millimeters, typical placement accuracy can be substantially relaxed.

• *Capable of tracking all 6 degrees of freedom.* Some manufacturing operations require 6-DOF of information during the process. For example, welding requires 3-DOF of information to locate the weld and three additional DOF to properly orient the tool relative to the part.

• *Accurate.* Because the laser beam diverges, reflections from the references are magnified on the photo diodes, increasing accuracy. This benefit, combined with high-resolution A to D converters provides micron accuracy in detecting translation and milliradian accuracy in detecting orientation. With different optics, field of view can be reduced to improve accuracy and visa versa.

• *Small and easily mounted to a machine.* At less than 76 cm^3 and 87 grams, the SixDOF sensor can be easily mounted on the head of a manufacturing machine without interfering in its operation.

• *Maintains track, even for very fast moving processes.* Analog data can be digitized very fast, e.g. 300K sample / second A to D converters are available. Therefore, the distance that the target moves between position updates is small, enabling a fast robot to track a fast target.

• *Inexpensive.* All components of the SixDOF sensor are commercially mass-produced items, providing the benefits of availability and low cost.

• *Uses standard machine instruction software.* As common in the manufacturing industry, machine path instructions can be generated in software directly from computer drawings of the part. This direct transfer of information is efficient, cost effective, and minimizes errors.

• *Easy set-up.* The references, mounted on tape, conform to the contour of the part, so positioning the reflective references on the part is only a 3-DOF task (Tx, Ty, Rz) that can easily be performed by an operator or a simple 3-axis computer controlled machine.

• *Non-contact and non-surface dependent.* As an optical sensor, it does not physically contact, and therefore does not damage, the part in any way. Furthermore, the sensor only illuminates the tape and references, so the characteristics of the part's surface are unimportant.

10A. List of competitors: Many companies make non-contact laser sensors, some are listed below. Most are one dimensional (1D) range detectors, a few construct a 3D profile of an object, but the object must move through its laser beam. By scanning a laser beam, the Miniature Laser Range Camera detects all 3 positions of a stationary object, and even though it does not detect orientation, it appears to be SixDOF's closest competitor. Laser coordinate measuring systems (laser trackers) also detect three positions of a stationary object, but, made for large work volumes, they are too big (>1 ft^3) and too expensive (~$140,000) to mount on each robot or machine head.

- *Aromat Corporation*, New Providence, NJ; LM300 Laser Sensors (range only)
- *Cyberoptics Corporation*; Minneapolis, MN; Cybergage (range only)
- *Dimensional Control*, San Carlos, CA; Laser Bench Micrometers; 1200 (2D + part motion)
- *IVP*, Sweden; RS 200 Ranger 3D Profile Measurement System (2D + part motion)
- *Keyence Corp.*, Woodcliff Lake, NJ; LC2420 (range only)
- *MTI Instruments Division,* Latham, NY; Microtrak 7000 (range only)
- *Research Technologies*, Edmonds, WA; RT-1000 Laser (1D planar alignment)
- *Servo Robot Inc.*, Boucherville, Canada; Miniature Laser Range Camera; BIP-35 (3D)
- *SMX*, Kennett Square, PA; Tracker4000 (3D)

10B. Key features of SixDOF sensor compared to its closest competitor, the BIP-35 Miniature Laser Range Camera (see table below)

Product Feature	SixDOF	BIP-35	SixDOF's Advantage
Degrees of information	6	3	Enables performance of 6-DOF tasks
Size (cm^3)	75.8 (5.7 x 3.5 x 3.8)	181.1 (3.5 x 4.5 x 11.5)	4x smaller in volume
Weight (g)	85	400	5x lighter
Speed (updates per second)	16,625 samples	60 images	277x faster
Position field of view (mm)	10 lateral, 15 - 35 vertical	30 lateral 18 - 35 vertical	Equivalent position field of view
Average Lateral resolution (µm) (Tx, Ty)	4	100	25x better lateral resolution
Average depth resolution (µm) (Tz)	20	45	2x better depth resolution
Orientation field of view (mrad)	750 tilt 1000 rotation	NONE	Wide orientation field of view
Average tilt resolution (mrad) (Rx, Ry)	1	NONE	Provides tilt information
Average rotation resolution (mrad) (Rz)	1	NONE	Provides rotation information
Cost (per system)	$5,000	$30,000	6x less cost
Image processing	NO	YES	No imaging software or hardware needed
Camera cooling	NO	YES, water or air cooling	No cooling system required
Diode laser source (mW)	5	30	6x less laser power required

10C. Improvements over competitive products: The SixDOF is the only production sensor capable of determining all six degrees of freedom relative to another object. The competitors' sensors are capable of detecting only three degrees of position or less. This additional information enables flexible automation of complex tasks which now can only be performed manually or after extensive machine training by a human operator. Consequently, robots or other computer controlled machines, which were until now under-utilized, can perform six axis tasks, autonomously. With smarter robots, a change in manufacturing specifications no longer causes costly production delays, and customer's needs can more readily be accommodated.

Furthermore, this sensor is smaller, faster, and more accurate. SixDOF uses lateral-effect photo diodes rather than a camera. Since photo diodes are smaller than a camera, SixDOF is about one fifth the size and one fourth the weight of the competitor's package. Yet, for an equivalent field of view, it is 277 times faster and up to 25 times more accurate. This is primarily because these photo diodes generate only six channels of analog output than can be digitized and fed into a computer at very fast rates. For example, a Maxim 12 bit A to D converter which costs less than $10, samples eight channels at a rate of 16,625 ksps / channel, and divides the signal into 1024 pieces (10 bits usable). This is compared to the competitor's camera system which is limited in resolution by the number of pixels (256 x 256) and limited in speed by the massive amount of information to digitize (8 bit digitization of each pixel generates over 16 Megabits of information per image).

Also, the cost for SixDOF is six times less than the camera system, $5000 versus $30,000. This is mainly because the competitor's camera system not only requires a camera but a video image grabber and expensive camera cooling hardware. In contrast, photo diodes are extremely simple and inexpensive when purchased in large quantities (~$20). Furthermore, the laser power required is less (5 versus 30 mW) because the SixDOF's laser beam reflects off highly reflective references on the part. While applying the references is an additional step, it makes the SixDOF sensor independent of the part's surface characteristics, permitting lower and less expensive laser power to operate on parts with diffuse surfaces.

11A. Principal application:

The SixDOF sensor enables a computer controlled machine to adjust to changes in manufacturing operations without teaching and without exact positioning of the part. Attached to the tool head of a multi-axis manipulator, the SixDOF sensor tracks reflective references. With the machine knowing all 6-DOF of its relative position and orientation to a part, multi-dimensional computer drawings can be used to guide the machine through complex 6-DOF positioning of the manipulator tool. Therefore, many types of manufacturing operations can be autonomously performed such as welding, milling, deburring, inspection, etc.

11B. Other applications: This sensor can be used in a wide variety of applications. Generally this sensor could be used in any task that uses computer controlled machines, such as:

• Assembling parts by sensing their relative alignment and correcting the difference. For example, reflective references could be placed on an aircraft fuselage, and the SixDOF sensor mounted on a wing so that the sensor could detect any misalignment as the two large parts are assembled.

• Inspecting or mapping the contour of parts relative to a known reference. The reference reflectors can be placed on key locations of a part with the SixDOF sensor making comparisons in all 6-DOF to reference points and/or each of the other points.

• Guiding an object relative to a reference platform. With reflective references located on a moving target, a SixDOF sensor located on a fixed reference platform could detect if the object was deviating from a desired path and provide guidance on how to bring the object back on line. The target could be tracked from centimeters or thousands of kilometers from the sensor.

• Controlling a 6-DOF cursor for personal computers. The sensor would be mounted inside a rolling hand support that permits the user to translate, tilt, and rotate the sensor about reflective references mounted underneath it. With 6-DOF control, plus push buttons, the user could perform much more complicated real-time tasks than now possible.

• Diagnosing muscle recovery. To evaluate the effect of physical therapy, doctors need to know how a patient's muscles move during exercises. By following reflective references mounted on the patient's injured limb, a robot with a SixDOF sensor can generate a 6-DOF mapping of muscle motions.

• Remotely performing dangerous tasks. The sensor enables remote manipulation of radioactive, toxic, or explosive materials. For example, a robot with a SixDOF sensor could track reflective references mounted on an operator's hands while he disassembles a dummy bomb, and another robot, electronically slaved to the motions of the first robot, would disassemble the real one.

11C. Potential application: The SixDOF sensor is an enabling technology that should have significant impact on flexible automation. Many of its future applications are not yet identified.

12. Summary:

The SixDOF sensor is a small, inexpensive, non-contact sensor that substantially increases the capability and flexibility of computer controlled machines. Until now, highly agile and accurate machines have been limited by their inability to adjust to changes in their tasks. By enabling them to sense all six degrees of position, these machines can now adapt to new and complicated tasks without human intervention or delay - simplifying production, reducing costs, and enhancing the value and capability of flexible manufacturing.

ORGANIZATION DATA

13. Chief Executive Office (corporate or university president, government research center director, etc.).

Name C. Bruce Tarter Position Director
Organization Lawrence Livermore National Laboratory
Address 7000 East Avenue P.O. Box 808, L-1
City Livermore State CA Zip 94551 Country USA
Phone 510-422-4169 Fax 510-423-2224

14. Contact person to handle all arrangements on exhibits, banquet, and publicity.

Name Kenneth Rhodie Position Div. Ldr, Science Mgt & Marketing Communications
Organization Lawrence Livermore National Laboratory
Address P.O. Box 808, L-664
City Livermore State CA Zip 94551 Country USA
Phone 510-422-0172 Fax 510-423-0973

15. To whom should reader inquires about your product be directed?

Name Charles Vann Position Deputy Program Leader, Laser Science and Technology
Organization Lawrence Livermore National Laboratory
Address P.O. Box 808, L-488
City Livermore State CA Zip 94551 Country USA
Phone 510-423-8201 Fax 510-422-1930

Work performed under the auspices of the U.S. Department of Energy by the Lawrence Livermore National Laboratory under contract No. W-7405-Eng-48.

ENCLOSURES:

Appendix A, Detailed Description of the Sensor
Appendix B, Letters of Interest
Appendix C, Patent on first version, Laser Focus Compensating Sensing and Imaging Device

Appendix A, DETAILED DESCRIPTION OF THE SENSOR

The sensor is composed of four assemblies: the laser illuminator, beam splitting and directing optics, lateral effect photo diodes, and signal processing electronics. All but the signal processing electronics are located in the sensor head (see Figure 1 in the main text and A1 below). The laser source is a 5 mW diode laser; its 3 Volt power source is located with the signal processing electronics. Two small mirrors (M1 and M2) guide the 1 mm diameter beam to the primary optical axis of the sensor. The beam is passed through two negative lenses (L1 and L2) which diverge the beam at a rate of ~0.3 radians (half angle). This high divergence creates a 2 cm diameter laser spot at about 3.5 cm from the face of the sensor. The beam divergence, depth of field, and spot size can be changed by choosing different negative lenses.

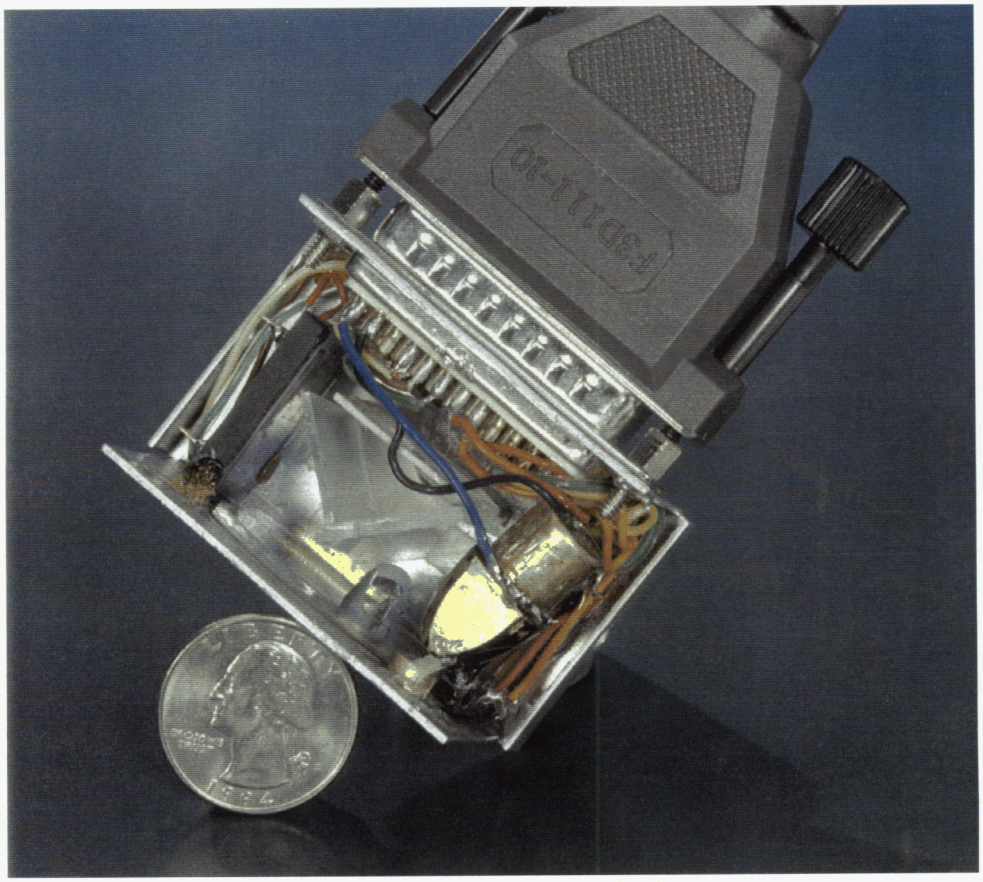

Figure A1. The SixDOF sensor

Two reflective references, a 3.5 mm diameter dot and a 2 x 1 mm bar, are mounted on non-reflective tape and applied to the workpiece. The laser light reflects off the references and back into the sensor. Because the beam is diverging, the reflections are magnified in area when the light returns to the sensor, allowing light to go around the small negative lenses and through a band pass filter. The filter passes the laser light but blocks light at other wavelengths. Inside the sensor, light from the dot is divided into two beams by a beam splitter. Half of the beam is reflected 90 degrees into lateral effect photo diode (P3). The other half of the beam passes through the beam splitter, into a positive lens (L3), and onto another photo diode (P2).

By design, P3 detects only lateral translation of the sensor relative to the reference dot (Tx, Ty), and P2 detects only rotation about those axes (Rx, Ry), avoiding ambiguity in the data. This delineation is possible because of the opposite characteristics of mirrors (beam splitter in this case) and lenses. (As described above, the light making it to P3 is reflected off the beam splitter while the light making it to P2 passes through the beam splitter and through a positive lens.) The beam splitter directly reflects the beam to a different spot on P3 when the dot is laterally displaced, but the lens focuses the beam to the same spot on P2 with relative insensitivity to translation of the dot, i.e., P3 is sensitive to translation and P2 is not.

In contrast, P2 is relatively sensitive to tilt of the sensor head, and P3 is not. Two sensor characteristics make this the case. First, because the laser beam is diverging, the reflected light enters the sensor as if it were from a point source underneath the center of the dot, regardless of sensor tilt. Secondly, when the sensor tilts some arbitrary angle ß about the real point source (L2), the beam splitter and P3 also tilt angle ß around L2. With the virtual point source still coming from the center of the dot, the beam splitter deflects the return beam an beam angle ß onto P3 which also has made an angular move of ß. Consequently, the beam illuminates the same place on the diode as before the tilt, i.e. P3 is insensitive to sensor tilt about L2. On the other hand, tilting the lens

does not substantially effect the path of the light onto P2, but since P2 changes its relative position due to the tilt, any relative tilt of the sensor is detected.

The second reflective surface, the bar located beside the reflective dot, provides a means of sensing the other two degrees of freedom: translation between the bar and the sensor (Tz) and the rotation of the sensor about the axis normal to the dot's surface (Rz). Because this reflective bar is beyond the edge of the dot, the laser light that reflects from it has a greater angle of divergence. The greater angle causes the light to pass through a different location of the filter, missing the beam splitter and reflecting off an adjacent mirror instead. This mirror (M3) directs the light onto another photo diode, P1. The negative lenses are selected to cause a beam divergence that will cause the beam to reflect off the bar and onto the center of P1 if, and only if, the sensor is at a prescribed stand-off distance from the bar. Therefore, any up-down deviation of the bar's reflection from the center of P1 can be calculated as a distance of the sensor from the bar (Tz). Likewise, the radial location of the bar relative to the center of the dot is used as a reference for rotation about Rz. Consequently, any right-left deviation of the bar's reflection from the center of P1 can be calculated as rotation of the sensor about the normal axis of the dot (Rz).

The signals from the three photo diodes are processed by electronics remotely located from the sensor head. The analog data from the diodes are digitized with a 12 bit, 8 channel, A to D converter at a rate of about 133 kHz (16,625 Hz/channel) and fed into a computer. Once in software, the data is multiplied by a calibration matrix to decouple the six axes of information. The processed data is then available to the operator for recording or sending commands to change the position of a computer controlled machine.

Appendix B, LETTERS OF INTEREST

ON-TRAK
PHOTONICS INC
[illegible] CA 92630 (714) 587-0769 FAX (714) 587-952[illegible]

March 1, 1996

Charles S. Vann
Lawrence Livermore National Laboratory
P.O. Box 808, L488
Livermore, CA. 94550

Dear Charles,

The purpose of this letter is to express our interest in a license, distribution, technology transfer or some method of commercializing the 6 axis target you have developed. As you know, ON-TRAK Photonics, Inc. and our sister company ON-TRAK LASER SYSTEMS specialize in non-contact optical position sensing for the precise measurement of position, motion, distance and vibration.

We have developed two axis position measurement devices for centering applications and X-Y position measurement. We have developed two axis angular measurement systems for measuring angular displacement i.e. pitch and yaw. We have also developed range measurement and proximity systems for measuring distance. There has been a need for some time now for a measurement head that incorporates all the features of the above mentioned systems into one optical measurement.

We feel that the optical head you have designed with its 6 degrees of measurement and compact size would be a very valuable tool in a number of application areas we are currently working in. Applications in the semiconductor industry for inspection of socket and pin orientation, the robotics industry for tracking applications, in the mechanical field for very precise alignment of critical components, and for the 3D mapping of parts.

Currently, these tasks are done with a variety of different instruments and to have the ability to make multiaxis measurements simultaneously would be a great enhancement to the metrology field.

As soon as mutually convenient, I would like to arrange a meeting to discuss this product and the market potential ON-TRAK sees.

Regards,

Chris Hageman

Chris Hageman
ON-TRAK Photonics, Inc.
ON-TRAK LASER SYSTEMS

Interdepartmental letterhead

Mail Station L--493

Ext. 3-6556 Fax: 3-4606

March 8, 1996

TO: Charles Vann

FROM: Erna L. Grasz
Automation and Intelligent Systems Focus Area Leader

SUBJECT: Expression of Interest of the Six DOF Sensor System

I have recently reviewed a description of the Six DOF non-contact optical sensor and would like to express my interest in acquiring a unit for integration and testing on a robotics systems.

I am currently the group leader for the robotics and automation engineering development efforts, and I have a team of engineers who are developing automation and intelligent systems for hazardous waste treatment and handling. This team has several applications in which this sensor system appears to be directly applicable.

One of the technology needs is the ability to follow contoured and irregular shaped objects with a decontamination tool. This requires the ability to use the sensor information and coordinate it with the workcell model, in addition to using the sensor information to update the workcell model if the objects have changed in shape or orientation.

Another application is what is known as "collision avoidance" in the robotics community. This refers to the ability to move the robotics system within a predefined space without having any part of the robot collide with an object or portion of the workcell. I believe this sensor head has great potential in providing 6 degrees of freedom positional information that could then be used to determine how close the robot is to having a collision.

I have been developing robotic systems and integrating state of the art sensors with automation for 6 years and I am very knowledgeable about the sensors commonly used with automation. To date I have not seen a system such as yours on the market. It could have great potential in furthering the intelligence required in the robotics and automation community.

When you have a few units available I would be very interested in acquiring a sensor system and integrating it for feasibility in the applications I have previously mentioned. Please keep me informed of your progress. Thank you.

Erna L. Grasz
Automation and Intelligent Systems Focus Area Leader

University Of California
Lawrence Livermore
National Laboratory

B3

cfc

Interdepartmental Letterhead

Mail Station: L-003

Ext: 3-3330
Fax: 3-1507

DATE: March 7, 1996

TO: Charles Vann

FROM: Dan Schneberk

SUBJECT: **Endorsement of Invention**

As leader of all the automotive NDE CRADA's, I want to endorse Charles Vann's hardware for determining 3D positions of metal objects and surfaces. It is my opinion that this kind of diagnostic can be exceedingly useful for guiding automated handling hardware and automated NDE equipment. Once this particular phase of the Chrysler work is completed, we will attempt to make use of this detection scheme for improving the consistency of part positioning tolerances at Kokomo Transmission plant.

Distribution:

Charles Vann
Mark La Chapell

DJS-3-1996

Inertial Confinement Fusion Program
ICF Laser Technology - Laser Components

Mail Station L-490
Fax 2-7748
Ext: 2-6194

March 8, 1996
LST-LTE96-009

To: C. S. Vann

From: T. W. Alger

Subject: SixDOF Sensor

I am the project engineer at the Lawrence Livermore National Laboratory (LLNL) responsible for the development a laser amplifier maintenance and transport vehicle (MTV) prototype for the National Ignition Facility (NIF) laser amplifier system. Multiple maintenance vehicles, based upon this prototype, will be constructed for the NIF.

Engineering requirements for this vehicle dictate that it be positioned very accurately with respect to the support structure prior to insertion or removal of the laser amplifier internal components for maintenance. Positioning of the MTV in six degrees of freedom (i.e., X, Y, Z, Rx, Ry, Rz) with an accuracy of a few thousandths of an inch in distance and milliradians in rotation is required.

I have extensive knowledge of the sensor market, and at the present time there is no reasonably priced single sensor package that will measure the required six degrees of freedom. Several sensors are available that will accurately measure one or two degrees of freedom (distance or rotation). However, accurate positioning in six degrees of freedom using single degree of freedom sensors requires many measurement locations. The extra sensors result with high cost, high probability for failure, and extra complexity in the overall system design and the control system.

A single six degree of freedom sensor would significantly simplify the overall sensor and control system for the MTV, while potentially increasing system reliability. Therefore, availability of the SixDOF sensor would have a major positive impact upon the design and operation of this prototype vehicle.

Terry W. Alger
Project Engineer, LLNL

TWA:ljd

University of California
Lawrence Livermore National Laboratory

Lawrence Livermore National Laboratory

March 8, 1996

Dr. Charles S. Vann
Laser Science and Technology Program
Lawrence Livermore National Laboratory

Dear Charles Vann,

Since your demonstration of the SixDOF sensor I have considered how it may be applied in the area Machine Tool Metrology. Ideally the measurement of a machine tool's performance is routinely done by the manufacturer during building, the buyer during acceptance testing, and by the maintenance crew during the life of the machine. However the reality is that machine tool testing requires an extensive capital investment in hardware, a very high skill level in the work force, and has a very low through put. Thus very little is actually done. An inexpensive and easy to use instrument could have a big impact in this arena.

I suggest that tests be made to evaluate the SixDOF in a spindle testing application. Over the past 20 years there have been several LLNL attempts to improve the measurement of spindle accuracy as described in the ANSI Standard B89.3.4M-1985. While technically successful these efforts have had limited commercial impact due to their requiring a high capital investment and highly skilled operators.

If it can meet the performance requirements, a spindle test system with a design based on the SixDOF may be a factor of 4 less expensive than what is now available commercially. This application deserves further investigation.

Sincerely,

James H. Hamilton

James H Hamilton
Manager
Large Optics Diamond Turning Machine

An Equal Opportunity Employer • University of California • P.O. Box 808 Livermore, CA 94551-9900 • Telephone (510) 422-1100 • Twx 910-386-8339 UCLLL LVMR

Industrial Partnerships & Commercialization

Mail Station L-795

Ext. 2-6416

FAX 3-8988

March 8, 1996
LIC96-225

MEMORANDUM

To: Charles Vann, L-488

From: Bill Grant

Subject: Proposed R&D 100 Entry of your Invention--3D Laser Focusing Compensation Device

---

We highly recommend submission of the subject technology for a 1996 R&D 100 Award.

Please recall Curt Theisen and I took your 2D Optical Focusing Demonstration unit to the 1995 Sensor Show in Chicago and received favorable business interest from industry, including their strong interest in 3D Focusing.

At that time and also during the last week, we also reviewed your technology with Tom McEwan during which he verified that your invention could be used in conjunction with his invention, Micropower Impulse Radar (MIR), to meet known needs of existing and prospective MIR licensees.

Bill Grant

Curt Theisen

cc: T. McEwan

US005241557A

United States Patent [19]

Vann

[11] Patent Number: 5,241,557

[45] Date of Patent: Aug. 31, 1993

[54] LASER FOCUS COMPENSATING SENSING AND IMAGING DEVICE

[75] Inventor: Charles S. Vann, Fremont, Calif.

[73] Assignee: The United States of America as represented by the United States Department of Energy, Washington, D.C.

[21] Appl. No.: 848,583

[22] Filed: Mar. 9, 1992

[51] Int. Cl.[5] H01S 3/08

[52] U.S. Cl. 372/101; 372/108

[58] Field of Search 372/99, 101, 108

[56] References Cited

U.S. PATENT DOCUMENTS

3,603,688	9/1971	Smith-Vaniz .	
3,619,069	11/1971	Alexander .	
3,849,742	11/1974	Hughes et al.	372/93
3,919,663	11/1975	Caruolo et al. .	
3,942,127	3/1976	Fluhr et al.	372/108
3,999,858	12/1976	Hernquist et al. .	
4,498,180	2/1985	Severinsson .	
4,633,479	12/1986	Trageser .	
4,664,517	5/1987	Guthrie et al. .	
4,873,692	10/1989	Johnson et al.	372/100
4,917,490	4/1990	Schaffer et al. .	

Primary Examiner—Leon Scott, Jr.

Attorney, Agent, or Firm—Henry P. Sartorio; Roger S. Gaither; William R. Moser

[57] ABSTRACT

A laser focus compensating sensing and imaging device permits the focus of a single focal point of different frequency laser beams emanating from the same source point. In particular it allows the focusing of laser beam originating from the same laser device but having differing intensities so that a low intensity beam will not convert to a higher frequency when passing through a conversion crystal associated with the laser generating device. The laser focus compensating sensing and imaging device uses a cassegrain system to fold the lower frequency, low intensity beam back upon itself so that it will focus at the same focal point as a high intensity beam. An angular tilt compensating lens is mounted about the secondary mirror of the cassegrain system to assist in alignment. In addition cameras or CCD's are mounted with the primary mirror to sense the focused image. A convex lens is positioned co-axial with the cassegrain system on the side of the primary mirror distal of the secondary for use in aligning a target with the laser beam. A first alternate embodiment includes a cassegrain system using a series of shutters and an internally mounted dichroic mirror. A second alternate embodiment uses two laser focus compensating sensing and imaging devices for aligning a moving tool with a work piece.

12 Claims, 5 Drawing Sheets

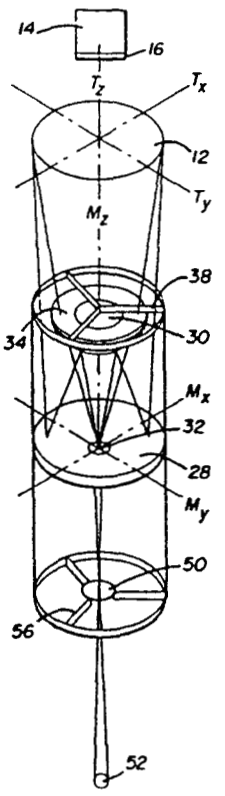

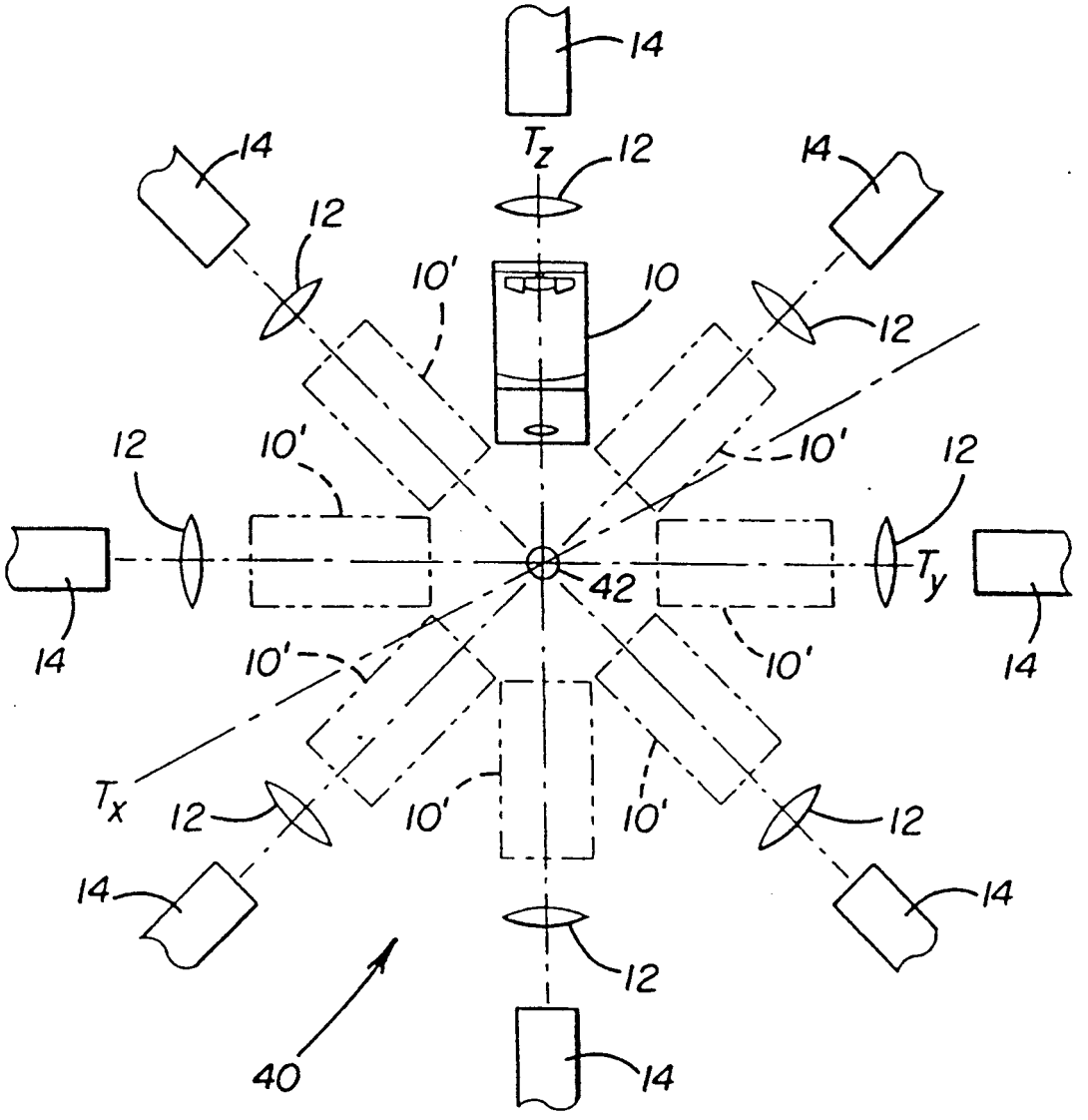
14
T_z
12
14
14
12
10'
10
12
12
10'
10'
12
T_y
42
14
14
10'
10'
T_x
12
10'
10'
12
14
14
12
40
14

FIGURE 1

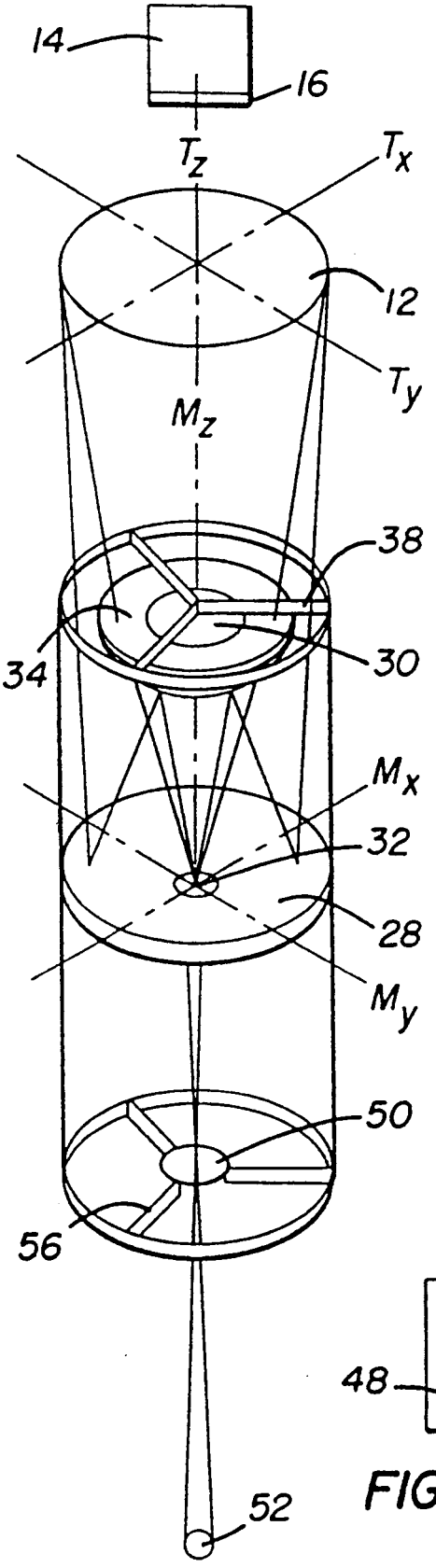

FIGURE 3

FIGURE 2

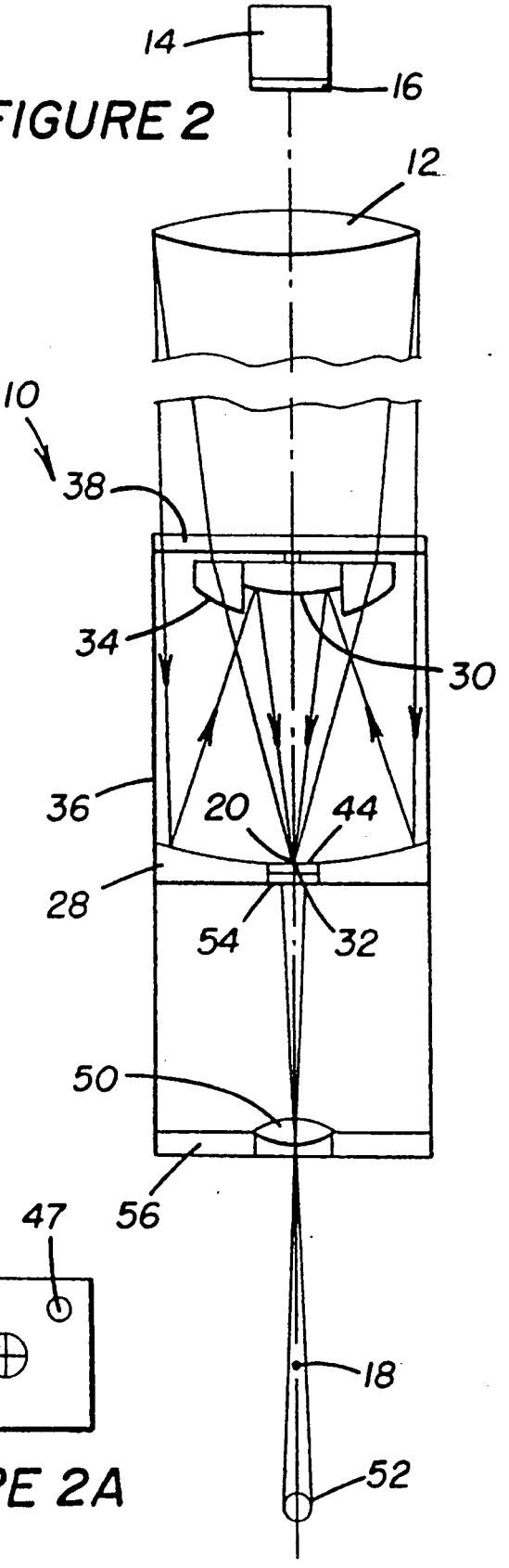

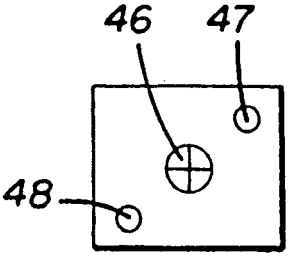

FIGURE 2A

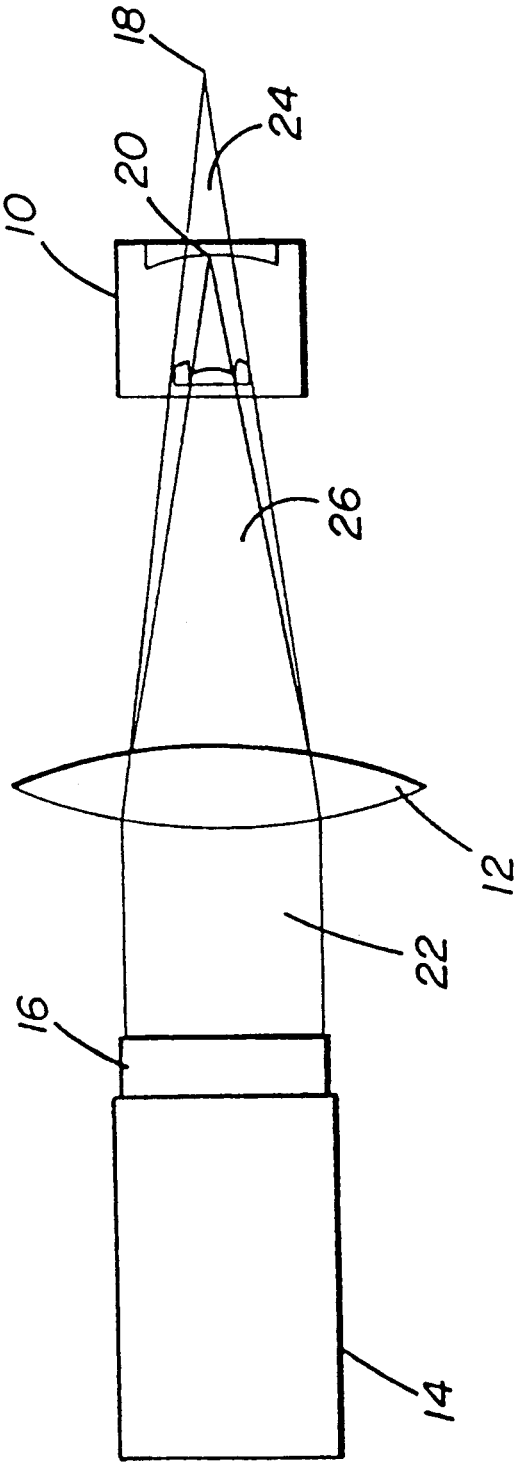

FIGURE 4

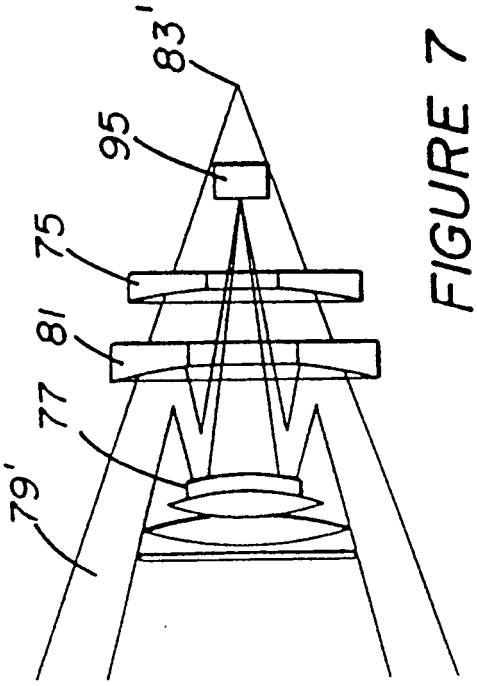

FIGURE 7

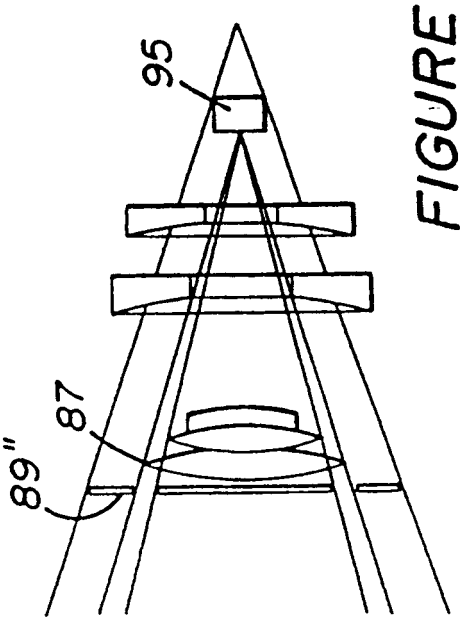

FIGURE 8

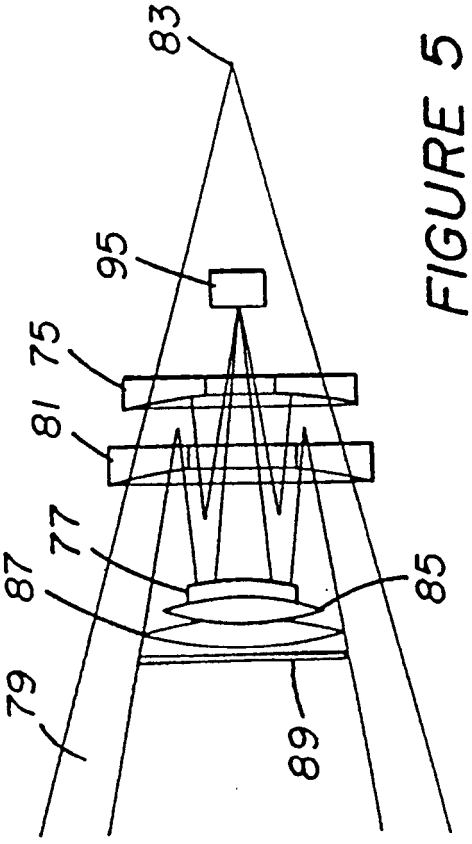

FIGURE 5

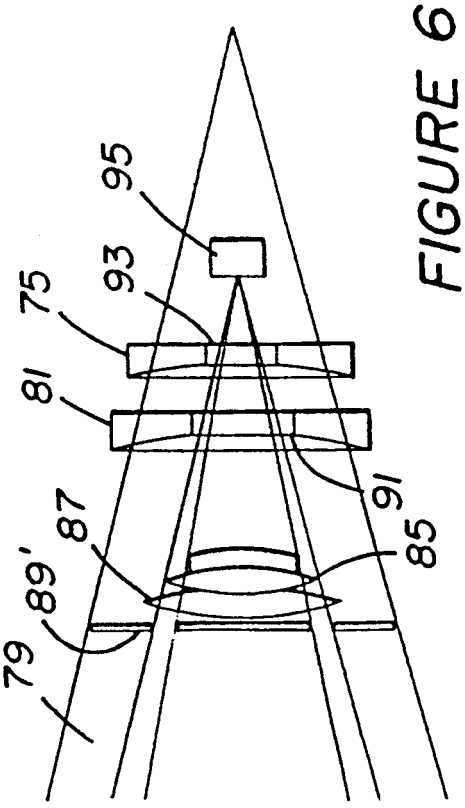

FIGURE 6

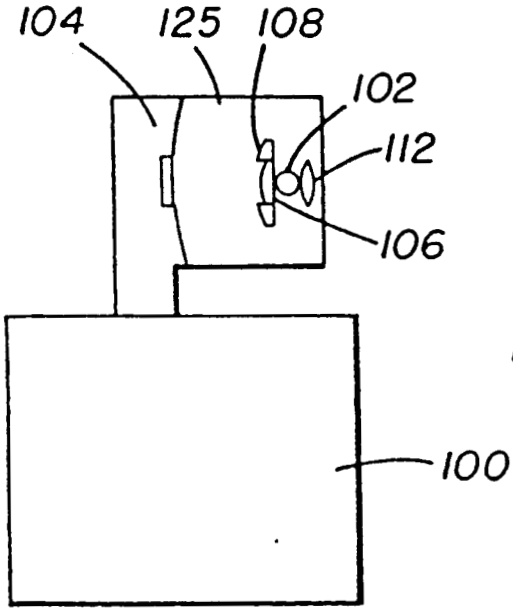

FIGURE 10A

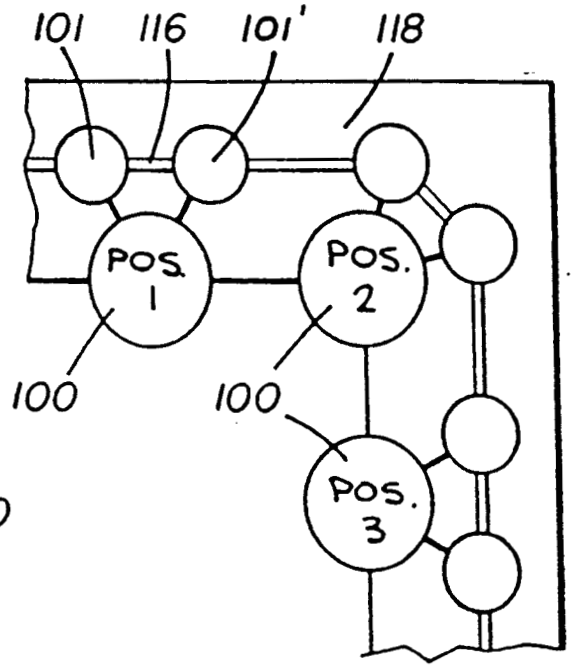

FIGURE 10

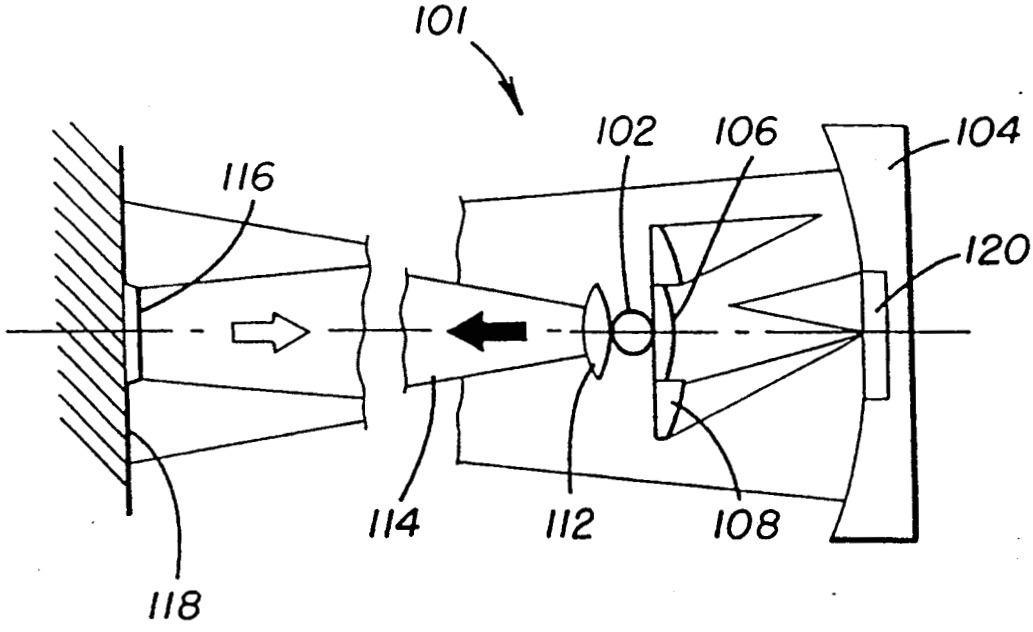

FIGURE 9

LASER FOCUS COMPENSATING SENSING AND IMAGING DEVICE

The United States Government has rights to this invention pursuant to Contract No. W-7405-ENG-48 between the U.S. Department of Energy and the University of California for operation of Lawrence Livermore National Laboratory.

BACKGROUND OF THE INVENTION

This invention relates to the focusing of high energy laser beams. In particular, it relates to the alignment and focusing of high energy laser beams wherein the frequency of the laser is converted by passing through a conversion crystal before impacting on a target. The system utilizes a single low intensity laser beam which is not affected by the crystal, for the alignment and focusing.

Presently, most large multi-amplifier laser devices utilize two separate, low intensity laser beams to align the main laser: one to align the beam through the laser and the other to align the beam from the conversion crystals to the target. In utilizing this system it is necessary to align the two laser beams one with the other and then subsequently compare the alignment on the target to the resulting high energy beam. The reason two separate alignment lasers have been used rather than one, is because of lens dispersion of the different frequency light after the beam passes through the conversion crystal. In short, the main beams, because of their high energy are often converted to a higher frequency before hitting a target. This conversion occurs with a high intensity beam. Since the alignment laser beam is of low intensity, it does not convert as it is passed through the conversion crystal. After the high intensity beam is converted to a higher frequency, it passes through a lens which focuses the beam onto a target. Because of the dispersion characteristics of a lens, the focal point for the higher frequency beam will be closer to the lens than the low intensity beam which does not convert. For example, a laser beam of low intensity and of a particular frequency and a wave length of 1054 nm will be unaffected by the conversion crystal. If that same 1054 nm laser is raised to a high intensity, when it passes through the conversion crystal in the laser it exits the conversion crystal with the higher frequency and a wave length of 351 nm. The 351 nm laser beam, as noted above, will focus closer to the focusing lens than the low intensity beam of 1054 nm. To provide an alignment beam which focuses on the target as in the main beam, in the past, a second alignment laser beam was injected into the system which had the same frequency as the main beam after conversion, i.e., 351 nm wave length in our example. As also noted, this requires co-alignment of the two alignment laser beams, i.e., the co-alignment of the 1054 nm and 351 nm beams in our example.

If it were possible to use a single alignment beam for both laser and target alignment, then there would be no need for a second alignment laser nor the need to co-align the two separate alignment laser beams.

This invention describes a device that permits one to use a single and low intensity alignment laser for both laser and target alignment, wherein the device compensates the low intensity alignment laser beam to focus and point a the high intensity beam in spite of the frequency dispersion caused by the focusing lens.

A second function of the present invention is to align a target relative to the laser beams once the above beam alignments have been accomplished.

The second function is currently performed by indirect viewing devices that are located near the target's final position. These indirect viewing devices may also be inaccurate and costly.

It is a object of this invention to provide a low cost means for compensating, sensing and imaging laser beams to a very high focus and a very high pointing accuracy.

It is also an object of this invention to position a machine tool adjacent to a workpiece with a great degree of accuracy.

It is a further object of this invention to provide means to focus coaxial laser beams having different frequencies.

SUMMARY OF THE INVENTION

The device disclosed herein is a laser focus, compensating, sensing and imaging device for use with a variable intensity laser beam and a focusing lens. The device consists of a convex tilt measuring lens, a convex mirror and a concave mirror. The device is mounted so that the convex and the concave mirror form a cassegrain system with the convex tilt measuring lens mounted in the same plane as the convex mirror and coaxial therewith. The focusing lens is mounted distal of the concave mirror and exterior of the cassegrain system so that a low intensity and parallel ray coherent laser beam may be focused to the focal point on the concave mirror by using the focusing lens and the cassegrain system and such that a high intensity coherent and parallel ray laser beam emanating from the same source as the low intensity beam will be focused while using the same focusing lens at the same focal point as the low energy beam using the cassegrain system.

BRIEF DESCRIPTION OF THE DRAWINGS

FIG. 1 is a schematic view of a system in which multiple laser beams are to be focused on a point at the center of a sphere wherein the laser focus compensating and sensing device is shown in position to align one of the plurality of laser beams.

FIG. 2 is a cross-sectional representation of the laser focus compensating and sensing device shown in relation to a laser focusing lens.

FIG. 2*a* is a representation of an image on a video display terminal.

FIG. 3 is a isometric view of the device shown in FIG. 2.

FIG. 4 is a schematic of the focal points of low and high frequency laser beams.

FIG. 5 is an alternative embodiment of the device shown in FIG. 2 using a dichroic mirror.

FIG. 6 is the same device shown in FIG. 5 utilizing the modified lens part.

FIG. 7 is the same device shown in FIG. 5 with a higher frequency beam wherein the higher frequency beam is reflective off of a dichroic mirror.

FIG. 8 is the same device shown in FIG. 5 wherein the higher frequency beam is passed through a shutter when both of the convex lenses mounted adjacent the secondary mirror in the cassegrain portion of the system.

FIG. 9 is a representation of a commercial embodiment device for use in positioning machine tools adjacent a workpiece.

FIG. 10 represents the device shown in FIG. 9 in schematic form positioning a tool adjacent a workpiece.

FIG. 10*a* is a schematic plan view of the device shown in FIG. 10.

DETAILED DESCRIPTION OF THE PREFERRED EMBODIMENT

Referring now to FIG. 2, a cross-sectional view of the laser focus compensating sensing and imaging device is shown at 10. Also shown in FIG. 2 is a focusing lens 12 and a laser source 14. It is to be understood that laser source 14 is shown as are the other elements in this particular Figure in schematic form. Laser source 14 is a multi-amplifier device capable of producing both low intensity and high intensity laser beams. Incorporated in the laser device 14 is a conversion crystal 16 which serves to increase the frequency and conversely decrease the wave length of the emanating laser beam when used in the high energy mode.

Referring to FIG. 4, the focusing lens 12 is shown relative to the laser source 14 and the conversion crystal 16. Assuming that the laser source 14 is capable of producing a laser output having a wave length of 1,054 nm, the conversion crystal 16 will have no effect on the frequency of the emanating laser light until that laser reaches a high intensity level. When the laser reaches the high intensity level, the conversion crystal 16 will change the frequency to a higher frequency with a wave length of 351 nm. With the change in frequency, the focal point 18 of the low intensity beam is moved closer to the focusing lens 12 to a point 20 (see also FIG. 2). This repositioning of the focal point is well-known in the optical art and will not be further described here but is attributable at least in part to the diffraction and refraction in the focusing lens 12.

When it becomes necessary to position and focus the beam 22 as shown figuratively in FIG. 4, it is necessary to use the lower intensity beam since the device could not survive in irradiation by the higher intensity beam.

It then becomes apparent that either a second alignment beam of the same higher frequency (not shown) must be utilized or some compensation made to locate the focal point of the low intensity, low frequency beam at the same point as the focal point of the high intensity, high frequency beam. This invention imposes the laser focus, compensation and sensing device 10 into the low frequency beam so that the focal point 18 is compensated to point 20. This compensation is achieved by folding the beam back upon itself using a cassegrain system such that the folded beam path of the low frequency beam 24 will focus at the same point 20 as the focal point of the high frequency beam 26.

Referring now to FIG. 2, a more detailed description of the laser focus compensating sensing and imaging device 10 will be undertaken. The device consists of a primary mirror 28 which is concave in shape and a secondary mirror 30 which is convex in shape, the two mirrors 28 and 30 form a conventional cassegrain system such that light impinging upon primary mirror 28 is reflected back to the secondary mirror 30 and then in turn reflected to the focal point of the cassegrain system. In this instance the focal point of the cassegrain system is located at the center point 32 of the primary mirror. Located at the focal point 32 is a "camera" in the form of a charged coupled device or CCD 44 so that the image can be observed on a remotely located cathode ray tube (schematically shown in FIG. 2*a*) in a manner well-known in the art. Surrounding the secondary mirror 30 is a convex annular tilt measuring lens 34 the purpose of which will become apparent in the ensuing discussion.

The cassegrain system is formed in the usual manner with a tube or other structural device 36 positioning the primary mirror 28 in the proper position relative to the secondary mirror 30. The secondary mirror 30 and the tilt measuring lens 34 can be mounted together by means of a spider 38 which can permit movement of the secondary mirror 30 and the tilt measuring lens 34 toward and away from the primary mirror 28 in order to properly focus this system before it is utilized in the laser alignment mode. This type of structure is familiar to optical workers in the telescopic field and will not be further described herein. Further, the optical properties of the primary mirror 28 and the secondary mirror 30 are conventional in nature and need not be discussed at greater length at this point.

Referring now to FIG. 1, the device is shown mounted in a multi-laser device 40. In device 40, eight lasers 14 are shown surrounding a target 42. In use, the number of lasers is such that a spherical arrangement may be necessary with the target 42 at the center of the sphere. It is the purpose of the eight or more lasers 14 to impinge upon the target 42 raising the temperature of target 42 to a substantially higher degree. In order to accomplish this, the laser beams emanating from the plurality of lasers 14 must be aligned and focused on the target 42. To accomplish this, a laser focus compensating, sensing and imaging device 10 can be positioned successively in the beam paths of the lasers between the focusing lenses 12 and the target 42. In FIG. 1, it is to be understood that only one laser focusing device is necessary; however, additional focusing devices 10' have been shown in the diagram to show where the focusing device 10 would be positioned successively in the apparatus 40.

In order to focus the laser beam 22 (see FIG. 4), a low intensity laser is produced in the laser 14 with the laser compensating and sensing device 10 positioned as shown in FIG. 1. Focusing lens 12 would, without the laser compensating device focus the low intensity beam at the point 18 shown in FIG. 2. However, with a high intensity beam and the concomitant conversion of the frequency in the conversion crystal 16, the focusing is at focal point 20. Thus, since the focal point 20 can be calculated as can the focal point 18, the laser compensating and focusing device is positioned so that a folded low intensity beam will focus at point 20. It can be seen that the incoming rays from the focusing lens 12 will impinge upon the primary mirror 28 to be reflected back upon themselves to the secondary mirror 30 and then focus at point 20.

With the device positioned as shown in FIG. 2, that is relative to the laser 14, the device is capable of sensing five degrees of freedom of the alignment laser beam with respect to the device. The device senses two degrees of tilt Mx and My (see FIG. 3) of the camera or CCD 44 relative to the incoming beam and three degrees of translation of the focusing lens 12 Tx, Ty and Tz. The only degree of freedom not sensed, the beam rotation about its own axis Mz, is not relevant to beam alignment.

The tilt measuring lens 34 is sensitive to tilt of the camera or CCD 44, but insensitive to translation of the focusing lens. The cassegrain system is also sensitive to tilt of the camera or CCD 44 but also sensitive to translation of the focusing lens. To discern the translation

errors from tilt errors, the tilt errors are corrected first with the tilt measuring lens. Tilt errors are corrected by adjusting the tilt of the laser focus compensating sensing and imaging device 10. A tilt error in this particular instance is defined as a distance of the focus spot of the tilt measuring lens from the center of the camera 44. In FIG. 2a a representation of the display received by camera or CCD 44 is shown. In particular, the desired center point is represented by a cross hairs 46 while the focus spot of the tilt measuring lens 47 may be adjacent too but off center from the focus spot 46. When the focal spot 47 is at the center of the camera 44 it will be coincident with the cross hairs 46 on the associated display. This occurs only when the laser focus compensating sensing and imaging device is normal to the alignment beam i.e., properly tilted in Mx and My and the central ray with respect to the beam direction.

If the cassegrain focal spot represented by the spot 48 in FIG. 2a is still misaligned after the tilt correction (that is after spot 47 is located in the center of the cross hairs 46) then the error must be due to translation. It should be pointed out that it is a simple matter to delineate spots 47 and 48, the tilt measuring lens spot and the cassegrain spot respectively, by simply observing the spots while adjusting either the focusing lens or the cassegrain system. The focus spot of the cassegrain system is used to correct translation errors. The translation errors are corrected by moving the focusing lens 12 until the spot 48 of the cassegrain system is at the center of the camera 46. This corrects for the focus lens translation errors parallel to the laser focus compensating sensing and imaging device camera face Tx, Ty. The translation error normal to the camera face Tz is observed as an error in beam focus. If the distance from the focus lens to the laser focus compensating, sensing and imaging device is the focal length of the focal lens 12, the focus of the alignment beam onto the camera face 44 will be at best focus through both the tilt measuring lens 34 and the cassegrainian system. If this distance is not the focal length, the focal spot will be larger for both lenses. The distance of translation error related to the increase size of the focal spot can readily be calculated. The focus lens 12 is then translated to correct the Tz translation error.

Referring now to FIG. 2, an imaging lens 50 is mounted in an extension of tube 36 so that the image of a target 52 may be focused upon a second camera or CCD 54. Camera or CCD 54 is mounted on the face opposite the mirror surface of primary mirror 28. Imaging lens 50 may be mounted to the extension of tube 36 in the same manner as the secondary mirror 30 that is, by a spider 56.

If a CCD is utilized, the image would be projected by means of a computer onto a video display tube such as is represented in FIG. 2a.

In order to utilize the imaging portion of this device, the tube 36 is moved backwardly away from the focal spot determined in the alignment process noted above so that the target 52 will be located at the focal point of the high frequency beam 20.

Three reference lasers externally located from the target establish a reference coordinate system for the laser focusing compensating sensing and imaging device such that they are orthogonally positioned and oriented so that their beams cross at the desired location of the target (see FIG. 1). To reference the device to each axis of the target reference system, the device is aligned separately and sequentially to each reference beam. The device is tilted to be co-axial to the reference beam as described above and translated to center the focus of the reference beam onto the camera. The device is then moved to the next axis and centered in the same way. This procedure places the center of the device, i.e., the camera, at the same point as the desired location for the target. After beam alignment, the same three reference beams are used during target alignment to insure that the imaging system is observing the target along the target reference axis. (If the camera and imaging lens system are not on the axis, a false target position error will result.) It should be noted that in FIG. 1 the devices are represented as being in one plane. This is done for convenience only as the devices may be placed on the circumference of a sphere surrounding the desired target position 42.

THE FIRST ALTERNATE EMBODIMENT

Referring now to FIGS. 5, 6, 7 and 8, an alternate embodiment of the device is depicted which permits the alignment of laser beams having different frequencies. As previously mentioned, laser beams having different frequencies will be refracted with a different focal point after they are passed through a focusing lens. In this embodiment, differing frequency laser beams can be focused on the same sensing or sensor position by use of a dichroic mirror or lens in the cassegrainian system utilized in the principal embodiment.

The structure is as follows. Reference should be made to FIG. 5. The cassegrainian system consists of a primary mirror 75 and a secondary mirror 77. Primary mirror 75 is concave as noted above while secondary mirror 77 is convex in the usual cassegrainian format. The secondary mirror 77 is of smaller diameter than the primary mirror 75 so that incoming light in the form of a beam 79 can impinge upon the primary mirror 75.

Disposed between the primary mirror 75 and secondary mirror 77 is a dichroic mirror 81. Dichroic mirror 81 permits or rather allows the transmission of a lower frequency laser while reflecting the light of a higher frequency laser. This is best shown by reference to FIG. 7 wherein the same dichroic mirror 81 is shown in the cassegrainian system consisting of concave mirror 75 and convex mirror 77 wherein the dichroic mirror 81 becomes the primary mirror by reflecting the incoming light from beam 79' which is of a higher frequency than that of the lower frequency beam 79. In this connection, it is pointed out that representations between FIGS. 5 and 7 indicate that focal points of 83 and 83' respectively, are differing distances from the cassegrainian system. This is because the lower frequency laser beam will converge farther away from the focusing lens than the higher frequency beam.

In addition to the cassegrainian system just described, there is a pair of convex lenses 85 and 87 that are mounted adjacent to secondary mirror 77 and distal of the primary mirror 75. Also, a shutter system 89 is included with the system depicted in FIGS. 5, 6, 7 and 8. Specifically, the shutter system 89 shown in FIG. 5 which blocks light passing through the lenses 85 and 87 can be replaced with a second shutter 89' so that the low frequency beam 79 is directed through both convex lenses 87 and 85, but blocks light passing into the cassegrainian system then through the coaxial hole 91 in the dichroic mirror 81 and the hole 93 in the primary mirror 75. It is to be understood that these holes are coaxial with and pierce the two mirrors. Located at the focal point is a sensor 95 which may be in the form of a cam-

era or CCD. These two lenses together result in the higher frequency laser beam also converging on sensor 95.

Shutter 89 and 89' may in like manner be replaced by a third shutter 89" as shown in FIG. 8 that permits transmission of light through only convex lens 87 while blocking the cassegrainian system.

USE OF THE ALTERNATE EMBODIMENT

FIGS. 5 and 6 represent usage of the alternate embodiment with a lower frequency laser beam such that the light of the laser beam passing through the dichroic mirror 81 and impinging upon the principal primary mirror 75 is reflected back to the secondary mirror and thence to the sensor 95. In like manner, the lower frequency beam is focused on the sensor 95 through the use of the shutter 89' and the lens 85 and 87. Once the lower frequency beam is positioned on the center of the sensor 95, then the higher frequency laser beam can be passed through the system so that it will reflect off the dichroic mirror 81 back to the secondary mirror 77 and thence through the holes 91 and 93 to the sensor 95. This is illustrated in FIG. 7. Just as was accomplished in the lower frequency situation, the shutter 89 is replaced with the shutter 89" so that the higher frequency beam passes through lens 87 to be focused on sensor 95 in the manner shown in FIG. 8.

Utilizing this system, two or more laser beams can be co-aligned. It is to be understood that the structure shown in FIGS. 5, 6, 7 and 8 would be contained in a conventional cassegrainian system with the sensor 95 mounted exterior of the cassegrainian system. The necessary supporting structure has not been shown because it would confuse the illustration. Since it is well-known in the art how to mount a cassegrainian system, it is not considered necessary to go into that detail in this specification.

THIRD EMBODIMENT

Referring now to FIG. 9, a particular embodiment of the laser compensating sensing and imaging device is shown in relation to a tool or the like that may be used in an industrial environment. In the view shown in FIG. 10, this particular tool is a welder or the like which is depicted schematically as welder 100. Referring now to FIG. 9, the laser portion of the device is shown schematically. A light source in the form of a laser is indicated at 102. As indicated in the principal embodiment, a cassegrainian system consisting of a primary mirror 104 and a secondary mirror 10 is shown. Surrounding the secondary mirror 106 is a tilt measuring lens 108. Again, it is pointed out that tilt measuring lens 108 is annular in nature and surrounds the secondary convex mirror 106. Here again, the structure would be contained in a tube 125 or the like as shown in FIG. 10*a*. Finally, an imaging lens 112 is positioned adjacent to the light source 102 so that beam 114 may be formed to impinge upon a reflective surface 116 (see FIG. 10) on a workpiece 118. The beam 114 is reflected back toward the cassegrainian system just described, so that a folded image is formed on a camera or CCD 120 located in the center of primary mirror 104. In a similar manner, a reflected beam returning from reflective surface 116 is, at the same time, focused on the CCD or camera 120 by means of the tilt measuring lens 108.

Using the same principles set forth above for alignment and focusing of the cassegrainian system in the principal embodiment, five degrees of freedom can be determined by this system in exactly the same manner. By using a second cassegrainian system 101 (see FIG. 10) the sixth degree of freedom can be obtained so that the two cassegrainian systems used together and affixed to a tool 100 will permit the cassegrainian laser focus compensating, sensing and imaging devices to position a tool 100 at various positions (Pos. 1, Pos. 2, Pos. 3) with reference to a particular workpiece 118. Thus, a seam may be welded between workpieces using this system in a robotic sense.

While this system has been described in relation to three embodiments, it is to be limited only so far as the claims which are appended herewith.

I claim:

1. A device for use with a source of a variable intensity laser beam and a focusing lens, the device comprising:

a convex lens;

a convex mirror;

a concave mirror;

a mounting positioning said convex and concave mirror to form a cassegrainian system, said convex lens mounted in the same plane as said convex mirror and coaxial therewith, said focusing lens mounted distal of said concave mirror exterior said cassegrainian system such that a low intensity and parallel ray coherent laser beam emanating from said source is focused to the focal point on said concave mirror by using said focusing lens and said cassegrainian system and such that a high intensity coherent and parallel ray laser beam emanating from said source and passing through said focusing lens is focused at the same focal point on said concave mirror.

2. The device of claim 1 wherein the convex lens is rotatable about two axes, each of said axes orthogonal to the axis of the cassegrainian system and orthogonal one to the other.

3. The device of claim 1 further including a light sensing device positioned at the focal point on said concave mirror.

4. The device o claim 3 wherein said sensing device is a charged coupled device.

5. The device of claim 4 further including display means for visually displaying images detected by said charged coupled device.

6. The device of claim 5 wherein the convex lens is rotatable about two axes, each of said axes orthogonal to the axis of the cassegrainian system and orthogonal one to the other.

7. The device of claim 6 wherein the focusing lens is translatable on two axes each of said axes orthogonal to the axis of the cassegrainian system and orthogonal on to the other.

8. The device of claim 3 further including a second sensing device positioned on the concave mirror distal of the convex mirror; and

a second convex lens mounted on the exterior of said cassegrainian system and on the axis thereof such that an image of an object is focused on the second sensing device.

9. An optical system for aligning coaxial electromagnetic beams of coherent light but of different frequencies that are passed through a focusing lens, the system comprising:

a first concave primary mirror;

a first convex secondary mirror;

a convex tilt measuring lens and;

a light sensing device;

said sensing device mounted at the center of said first concave primary mirror;

said first concave primary mirror and said first convex secondary mirror mounted to form a cassegrainian system and positionable coaxially to the focused electromagnetic beam and within the converging rays;

said convex tilt measuring lens mounted coaxial to said cassegrainian system so that a high intensity electromagnetic beam of coherent light after passing through said focusing lens will have a focal point at the center of the first concave primary mirror on the sensing device; and

a low intensity coaxial electromagnetic beam of coherent light passing through said focusing lens will after passing through the cassegrainian system have the same focal point as the high intensity light.

10. A system for focusing at least two converging laser beams at different frequencies at a single point, the system comprising:

a cassegrainian system having a primary concave mirror and secondary convex mirror, said concave mirror defining a central bore;

a dichroic concave mirror defining a central bore, said dichroic concave mirror reflective to higher frequency laser beams and transparent to lower frequency laser beams, said dichroic concave mirror mounted within the cassegrainian system;

sensor means mounted within the converging laser beam but exterior of said cassegrainian system and proximate said primary concave mirror, said sensor means responsive to light for transmitting an image of impinging light to a visual display system,

lens means adjacent to the convex secondary mirror and distal of the primary concave mirror, said lens means for further focusing the converging laser beam on said sensor means; and

shutter means for selectively and alternatively interrupting portions of said converging laser beams so that said converging laser beam is directed first to said cassegrainian system and second to said lens means.

11. A device for use in guiding a tool attached to the device along a workpiece having a reflective path thereon, the device comprising:

a first laser source;

lens means to focus coherent light from said first laser on said reflective path;

a concave primary mirror,

a convex secondary mirror,

said concave mirror and said convex mirror mounted to form a cassegrainian system;

an annular convex lens mounted coaxial to the cassegrainian system and about said secondary mirror;

a first CCD mounted in the center of said primary mirror;

wherein laser light reflected from said reflective path and passing through said annular convex mirror will focus on said CCD and laser light reflected from said reflective path and reflected by said primary mirror and said cassegrainian system will also focus on said CCD.

12. The device of claim 11 further comprising a second device attached to the tool comprising:

a second laser source;

second lens means to focus coherent light from said second laser on said reflective path;

a second concave primary mirror,

a second convex secondary mirror,

said second concave mirror and second convex mirror mounted to form a second cassegrainian system;

a second annular convex lens mounted coaxial to the second cassegrainian system and about said second secondary mirror; and

a second CCD mounted in the center of said second primary mirror of the second cassegrainian system;

wherein laser light reflected from said reflective path emanating from said second laser source and passing through said second annular convex lens of said second cassegrainian system will focus on said CCD and laser light reflected from said reflective path and reflected by said second primary mirror in said second cassegrainian system will also focus on said CCD;

whereby signals received by said first CCD and said second CCD will fix the location of said tool relative to said reflective path.

* * * * *