LAWRENCE
LIVERMORE
NATIONAL
LABORATORY

LLNL-TR-695058

Administrative Files 1957, 1958, 1961 Related to Livermore Pool-Type Reactor

C. E. Quinly

June 15, 2016

Disclaimer

This document was prepared as an account of work sponsored by an agency of the United States government. Neither the United States government nor Lawrence Livermore National Security, LLC, nor any of their employees makes any warranty, expressed or implied, or assumes any legal liability or responsibility for the accuracy, completeness, or usefulness of any information, apparatus, product, or process disclosed, or represents that its use would not infringe privately owned rights. Reference herein to any specific commercial product, process, or service by trade name, trademark, manufacturer, or otherwise does not necessarily constitute or imply its endorsement, recommendation, or favoring by the United States government or Lawrence Livermore National Security, LLC. The views and opinions of authors expressed herein do not necessarily state or reflect those of the United States government or Lawrence Livermore National Security, LLC, and shall not be used for advertising or product endorsement purposes.

This work performed under the auspices of the U.S. Department of Energy by Lawrence Livermore National Laboratory under Contract DE-AC52-07NA27344.

LAWRENCE BERKELEY LABORATORY

ADMINISTRATIVE FILES

DC FILES

1957

FOLDER TITLE

MAJOR INSTRUMENTS

Reactors - Livermore Pool Type Reactor (LPTR)

CONFIDENTIAL

DECLASSIFIED

N.P.P. File # 4969

Page 1 of 111
Copy 24 of 50
Series A.

SAFEGUARD REPORT
LIVERMORE POOL TYPE
REACTOR

Letter dated 6-15-56

Classification cancelled by
authority of the Office of
Declassification 6-5-56
Date
By Lou Halm 7-9-56

Edited
by
Robert L. Detterman

Reactor Design Group

Theodore Stern, Project Manager
Robert L. Detterman
Leo DeMarinis
Sheldon D. Strauss
Donald S. Thompson
William Tinbergen

Consultants

Dr. Thomas H. Pigford
Dr. Theos J. Thompson

DECLASSIFIED

CONFIDENTIAL

DECLASSIFIED

TABLE OF CONTENTS

	Page No.
1. ABSTRACTS	6
2. INTRODUCTION	7
3. DESCRIPTION OF THE FACILITY	8
DESCRIPTION OF THE SITE	
3.10 The Livermore Valley	8
3.11 Meteorology of the Livermore Valley	13
3.12 Seismology of the Livermore Valley	14
3.13 Geology of the Livermore Valley	14
DESCRIPTION OF THE REACTOR AND EXPERIMENTAL FACILITIES	
3.20 The Reactor	16
3.21 Experimental Facilities	20
3.22 Thermal Columns	22
3.23 Beam Holes	23
3.24 Through Tube	26
3.25 Irradiation Ports	26
3.26 Pneumatic Tubes	26
3.27 Other Experimental Elements	27
DESCRIPTION OF THE REACTOR BUILDING	
3.30 Building Structure	29
3.31 Special Features to Assure Air Tightness	33
3.32 Air Conditioning System	34
3.33 Decontamination System	34
3.34 Reactor Building Flooring	35
3.35 Mechanical Equipment Pit	35
3.36 Crane and Monorail	36
3.37 Neutron Windows	36
3.38 Fuel Element and Source Storage Pit	36
CORE AND EXPERIMENTAL FACILITIES COOLING SYSTEMS	
3.40 General Description	37
3.41 Main Loop	37
3.42 Demineralizer-Filter	39
3.43 Drain Loops	39
3.44 Waste Disposal	40
3.45 Irradiation Port Loops	40
3.46 Beam Hole Loops	40
3.47 Exhaust Loops	41
4. NORMAL OPERATIONAL PROCEDURES	
4.0 Introduction	42
ADMINISTRATION	
4.10 General	42
4.11 Responsibilities of Operating Personnel	46
4.12 Program and Safeguard Committee	48

DECLASSIFIED

DECLASSIFIED

TABLE OF CONTENTS

	Page No.
CONTROL SYSTEM	
4.20 Reactor Control Instrumentation	50
NORMAL REACTOR OPERATIONS	
4.30 Operational Procedure	56
4.31 Reactivity Requirements	57
4.32 Borax-I Comparison	59
5. HAZARDS DURING NORMAL OPERATION	
5.0 General	60
5.1 N-16 Activity in Cooling Water	60
5.2 Demineralizer Activity	60
5.3 Gas Evolution	61
5.4 Fuel Element Disposal	62
5.5 Pneumatic Tube Operation	62
5.6 Radiation Levels	63
6. HAZARDS DUE TO FAILURES	
6.0 General	64
6.1 Fuel Element Failure	64
6.2 Failure of Experimental Facilities	65
6.3 Loss of Coolant	65
6.4 Failure of Experiments	66
7. HAZARDS FROM CATASTROPHIC EVENTS	
7.0 Introduction	67
7.1 Cloud Diffusion Study	
8. BIBLIOGRAPHY	70
9. APPENDICES	
I Nuclear	72
II Meteorology Data	78
III Seismology	96
IV Geology	101
V Anticipated Experiments	109

DECLASSIFIED

ILLUSTRATIONS

	Page No.
Artist's Conception of LPTR Building	5
Reactor Site Relative to the Town of Livermore	9
Reactor Site Relative to the Livermore Laboratory	10
Reactor Site Relative to the San Francisco Area	11
Sectional Elevation of Reactor	17
Plan View of Reactor	18
Reactor Core Cross Section	21
12" Beam Tube and Plug	25
Pneumatic Tube System	28
Laboratory and Reactor Building - Plan	30
Laboratory and Reactor Building - Elevation	31
Reactor Building Details	32
Flow Diagram	38
Technical and Administrative Organization of UCRL	43
Organization of the Neutronic Research Group	44
Instrumentation Summary Table	51
Control Rod Actuator	53

DECLASSIFIED

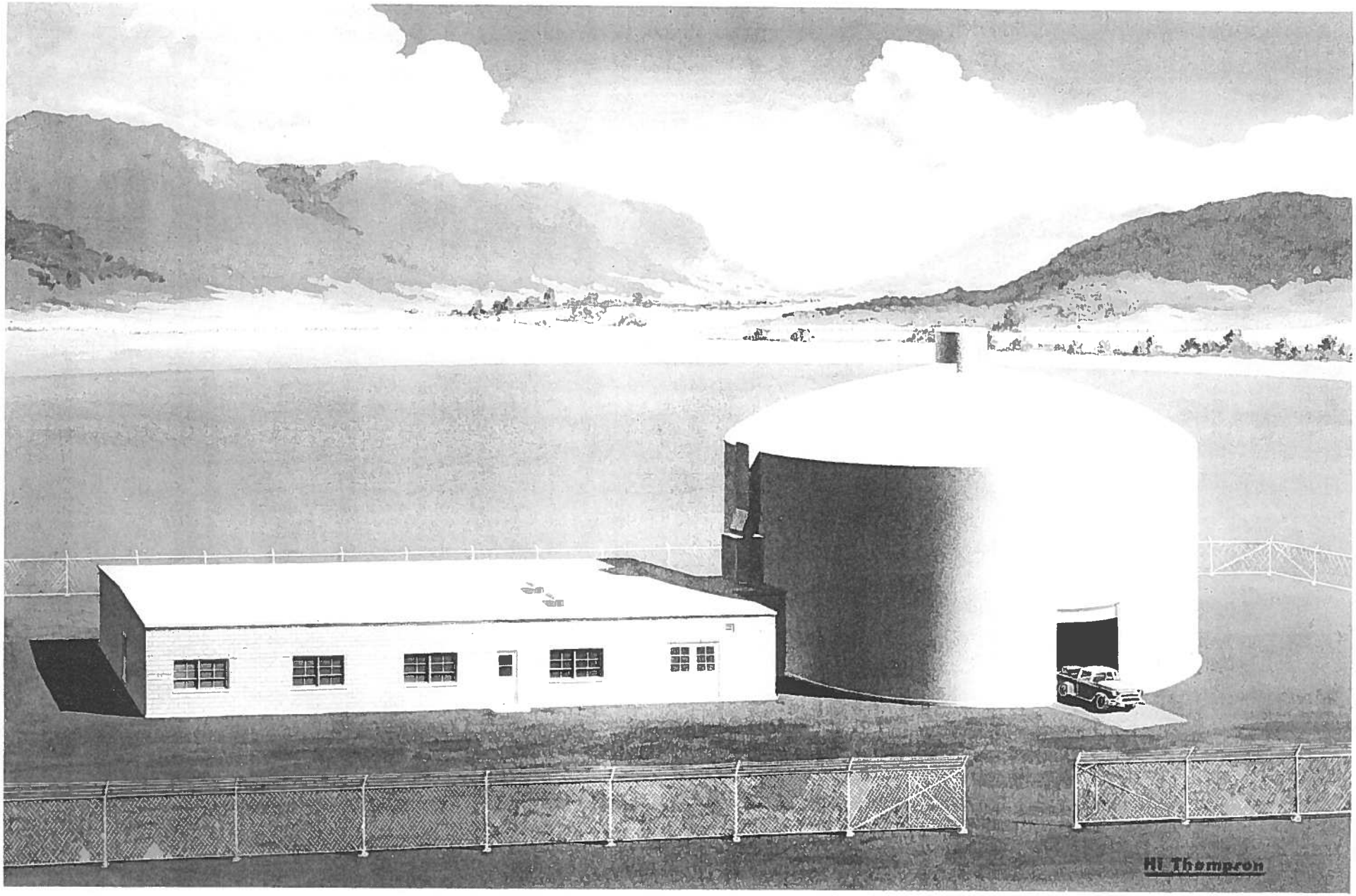
Hl Thompson

ABSTRACT

The Livermore Pool Type Reactor has been designed as a versatile research facility to serve the programs of the Livermore Branch of the University of California Radiation Laboratory. Average thermal neutron flux in the reactor will be approximately 7×10^{12} neutrons/cm^2-sec. with a maximum flux in the central "flux trap" of near 3×10^{13} neutrons/cm^2-sec. In this way the high flux necessary for special experiments can be achieved with the reactor operating at one megawatt.

Radioactive effluents from the reactor are prevented from entering the external environment by enclosing the reactor in a steel building. Under certain meteorological conditions and following the improbable rupture of the reactor building, the surrounding off-site populations could be exposed to greater than the maximum permissible amounts of radioactive materials. The probability of such a catastrophic release of radioactive material has been kept to a minimum by the adequate safety considerations which have been incorporated in both the design of the reactor systems and the operating procedures for the facility.

2.0 Introduction

With the formation of the Livermore Branch of the University of California Radiation Laboratory and the increase in experimental activity, the need for a high flux reactor has become increasingly evident. The experiments which the laboratory wants to conduct will need short lived isotopes of high specific activity and will use beam holes to perform irradiation and nucleonic studies. The long transportation time from and high priority of the nearest high flux reactor, the MTR, precludes its use on a large scale by the laboratory.

Consideration was given to various possible types of reactors with respect to the experimental facilities which will be needed at the laboratory. It was decided that a water moderated reactor of design similar to the MTR operating at a power of 1 MW would serve the laboratory at this time. The reactor was designed to best meet the requirements of high flux, safety, financial feasibility and flexibility of experimental facilities. The Livermore Pool Type Reactor (LPTR) will be built as a general purpose irradiation facility.

Although the principle use of the reactor will be for weapons research, special features have been incorporated to make the reactor a research tool which can be used by all of the activities at U.C.R.L. At the present time, the program of experimentation and research anticipated for this reactor is quite broad. It will range from the problems of calibration and production of radioisotopes for diagnostics, to bulk type measurements on nucleonics. Microscopic and macroscopic cross section will be measured as well as irradiation damage to and shielding properties of various substances. Irradiation studies and isotope production will also be undertaken with reference to biological research. In general, then, the program will comprise fundamental experiments of chemistry, physics, biophysics and medicine. No experiments in reactor physics with the exception of the initial tests will be conducted. In Appendix V a list of the anticipated first experiments is shown.

Foster Wheeler Corporation will build this reactor for the A.E.C. and will perform the initial testing procedures, both nuclear and mechanical. The reactor has been designed to operate at one megawatt. All the permanent parts of the facility have been designed for 5 megawatts, should this higher power level be needed at some future time.

3.0 Description of the Facility

The description of the LPTR facility is broken down into four sections. In the first of these the reactor site is described with reference to its meteorology, geology and seismology. Appendices II, III and IV contain more detail discussions of these topics. The second section deals with the reactor and associated experimental facilities. The steel building in which these facilities are housed is discussed in the third section and the cooling systems necessary for the reactor operation are discussed in the final section.

3.1 Description of the Site

The Livermore Research Laboratory is located approximately 35 miles east of Oakland at the eastern end of the Livermore Valley (see page 9). The outline of this valley is roughly an elongated oval with a long axis of 13 miles in an east-west direction, the larger end of the oval being to the east. At its eastern end the valley is 6 or 7 miles wide and in the center and western portions is 3 to 4 miles wide. The total area of the valley floor is about 58 square miles. At the northwest corner the valley connects with the narrow Amador Valley which is orientated in a SSE direction. This valley extends straight toward Danville, about 9 miles distant. In the southwest corner the valley has a smaller opening which is probably not very significant meteorologically, but does provide the only water stream leaving the valley.

The floor of the Livermore Valley is relatively flat containing only a few small hills. It slopes from about 600 feet MSL (mean sea level) in the vicinity of the site to about 400 feet MSL in the western portion. There are hills on all sides ranging from 1,000 to 2,000 feet MSL.

The location of the Livermore Site is shown on page 10. The site is a converted naval air base approximately 3 miles east of the city of Livermore. The controlled area of the site is about 1 square mile. Location of the site with respect to the San Francisco area is shown on page 11.

The main population centers are located in a westerly direction from the reactor site. The largest of these is the Parks Air Force Base, about 10 miles from the site, which has a complement varying from 10,000 to 15,000 men. The next largest population center is the town of Livermore

3.11 Meteorology (2)

Wind speed and directional roses prepared by the U.S. Weather Bureau indicates that most probable daytime winds are those with a southwest direction. A pronounced west peak exists in the summer half-year and a northeast peak exists during the remainder of the year. The changes are associated with two oppositely directioned seasonal regimes. During the summer the interior valleys are heated through the day, developing a large temperature differential between the air in the valleys and the relatively cool maritime air of the San Francisco Bay Region. The colder air then rushes inland. This phenomenon occurs almost daily with considerable regularity during the late spring and summer. During fall and winter the temperature gradient is directed in the opposite sense, and the flow from east to west through Altamont Pass produces a northeast wind frequency maximum, although this is less pronounced than is the summertime effect. Daytime wind speed during the year rarely exceeds 31 miles per hour and is normally less than 18 miles per hour. The maximum wind speed observed was 67 mph; no tornadoes or hurricanes have occurred.

The main difference between night winds and day winds appears to be the higher frequency of calms and a lower frequency of winds above 18 miles per hour at night. The location of the direction maxima is much the same.

No data are available for winds aloft at Livermore. At Oakland, however, ground wind speeds are comparable to wind speeds at 500 meters and 750 meters with a slightly higher NNW and NW direction frequency.

Although no radiosonde records are available for this region, the Weather Bureau has predicted that unstable conditions will predominate during the day with isothermal or inversion conditions during the night. Because of the somewhat high frequency of low strata during the summer nights, more frequent isothermal or even unstable conditions beneath the cloud base can be anticipated than would be found if the nights were all clear. A low-level inversion layer, associated with the Great Basin Anticyclone, might persist in the valley for a number of days during the winter months.

The weather, in relation to the operation of the proposed unit in the Livermore Valley is generally favorable. The winds blow directly towards Livermore, the closest center of population, only 9% of the time during the year. During periods of precipitation, the wind blows towards Livermore only 6% of the time. The rainiest month, January, averages only eleven rainy days. These conditions greatly reduce the probability of serious contamination in the town of Livermore.

3.12 Seismology(3)

For the period 1926 to 1953, 53 earthquakes occurred within a 5 mile radius of Livermore. All of these quakes were of an intensity of less than V on the modified (Mercalli Scale of 1931). (This scale is included in Appendix III). Design for earthquakes of this magnitude is well understood and no problems of hazards are anticipated. The earthquake of 1906 which caused major destruction in San Francisco was felt in Livermore only to the extent of about VII on the Mercalli Scale.

3.13 Geology(3)

There are two theories as to the formation of the Livermore Valley. One claims the valley was formed by erosion and dissection as the region around the valley experienced an uplift during buckling and warping of the earth's crust. The second theory indicates the valley was formed by great faults that let the ground surface fall several thousand feet. Both theories of formation, however, lead to the development of a large bowl filled with water-bearing gravel (Pliocene) and sealed on all sides to passage of underground water from the valley. Because of relatively heavy rains during the season and the steep sides presented by the newly formed valley, large quantities of coarse gravel were washed into the floor of the Arroyo Valley, Arroyo Mocho, Arroyo Las Pasitas, and other drainage areas, leaving a second layer of water bearing gravel on top of the Pliocene gravels. This latter process is still occurring but, as the valley has fills, the streams become more meandering on the valley floor and the large gravels have, of recent years, been deposited on the eastern edge of the valley while only the silt is carried to the Pleasanton side. This has resulted in a 30-40 foot silt cap on the eastern edge, gradually decreasing in thickness, until at Livermore, the coarse gravel is apparent in surface outcropping.

Water percolates these surface gravels easily (approximately 10 cubic feet of water per square foot of superficial surface per day) and the gravel beds rapidly saturate each rainy season. Relief, after filling, is provided by seepage to the surface through the silt cap at the eastern end of the valley and outlet to the sea via the Niles Gap. No underground water escapes via the San Ramon Valley. During the summer months the water table is lowered by pumping and by evaporation. At the surface evaporation from the water table can account for 45 inches per year; however, this rate drops to zero at a water table level of nine feet. Water passage through the gravel bed is estimated at 30 feet per day under free flow. The actual flow, however, will be dictated by pumping demands, evaporation from the lower valley, and filling of the gravel bed during the stormy season.

the regulating rod is worth about 1% in reactivity.

When the reactor is scrammed, holding magnets which ride within magnet guide tubes attached to the special element, release the absorber rods which then fall, by gravity, into the core through the special fuel elements. The fall of the rods is cushioned by shock absorbers which also act as the magnetic armature. The magnets release the control rods within 15 milliseconds after the scram signal is received and the release is indicated by a microswitch contact located on the magnet. The regulating rod, not being held by a magnet, does not "participate" in the scram.

The holding magnets as well as the regulating rod connect through extension rods to the control rod drive actuators located at the top of the tank. The actuators, of the rack and pinion type, sit on a support plate which duplicates the element positions on the core grid plate so that the actuators can be positioned over any of the 35 grid spaces. The actuators are connected to the extension rods by oversized flanges with large bolt holes. This slack plus the built-in adjustments in setting the actuator support plate allow for alignment of the actuators and the special fuel elements. On page 53 a picture of the actuator is shown and it is discussed in section 4.2.

The nuclear instruments for the reactor are located in separate thimbles underneath the grid plate, away from the control rods. An antimony-beryllium source will be used for startup and this source will be kept in the reactor.

The whole reactor top is enclosed by 1/4 inch steel plates which can be removed in sections to permit refueling, inspection and maintenance. The cover plates direct radioactive gases produced in the reactor into the ducting system, and since the plates are also fastened to other structural members, they provide some deterrent to expulsions from the reactor, although they are not primarily intended as a pressure seal. This structure must be removed to perform maintenance and refueling operations on the core.

Three feet above the reactor core, attached to the tank wall, are located the spent fuel element storage racks which are provided to allow fission product activity to decrease before fuel elements are stored in the floor facility or are returned to chemical processing.

The demineralized water in the tank, the six foot high 2-1/2 inch lead section and six foot thick magnetite concrete provide shielding at the reactor room floor level. The six foot concrete section extends 11 feet upward where it tapers to 3 feet at an elevation of 13 feet. (See sectional view of reactor on page 17.) The 12-1/2 feet from this point to the top is formed of ordinary concrete.

All concrete sections in the reactor room, the floor, the foundation pad, the igloo blocks, as well as the reactor shield are reinforced with steel equivalent to 1% of the area for earthquake resistance. The addition of magnetite as a heavy aggregate provides for a shield density of 220 pounds per cubic foot. The reactor faces of the shield are lined with 3/4 inch steel plate. The 2-1/2 inches of lead shielding is bonded to the outside of the aluminum tank to assure heat transfer to the pool water. Small thimbles are set into the shield in which gamma counters can be lowered to check the radiation levels at various distances from the core. In addition, thermocouples that are also set into the shield will be used to check concrete heating.

The step at the 11 foot elevation is used as a balcony which is reached by a staircase placed next to the igloo wall. This staircase also provides access to the reactor top (see plan and section views of reactor building on pages 30 and 31.) Guard rails are provided at the balcony level and on the reactor top.

3.21 Experimental Facilities

A schematic of the reactor core on page 21 shows the experimental facilities that surround the core. The elements on the reactor grid illustrate a possible configuration of fuel and reflector elements when operating with the central thermal "flux trap". As mentioned before, a total of 35 fuel and reflector positions are provided on the grid plate. In order to permit the grid positions to be used for either fuel or reflector elements, the reflectors are made of (AGOT) graphite canned in 2S aluminum of the same external configuration as the curved fuel elements.

With the central "flux trap" in the core approximately 21 standard fuel elements and 5 special fuel elements will be required. The exact total is dependent upon the burnup conditions which exist in the various fuel elements. Vacant grid positions are filled with reflector elements. The average thermal flux in the core is about 7×10^{12} n/cm^2-sec and the thermal flux in the central void is about 3×10^{13} n/cm^2-sec.

To this flange is bolted the beam tube proper, which as before consists of a stainless steel section and an aluminum extension cantilevering into the tank. Through the annulus formed by the two liners, cooling water is circulated. A vent connected to the reactor tank proper prevents air from being trapped in the annulus.

3.24 Through Tube

A 4 inch diameter horizontal through tube labeled T1-T2 is provided through the east thermal column. Again, this facility is made removable by providing aluminum sleeves in the concrete and the thermal column. The aluminum sleeves in the concrete are flanged to a stainless steel section which is welded to a vestibule section. The aluminum through tube passes through the sleeves, and the flange and a rubber gasket at each end of the sleeves prevents the escape of pool water but permits some thermal expansion of the tube. The air in this tube is purged to the experimental ducting system as is the air in the thermal columns and the air used in the pneumatic tube system.

3.25 Irradiation Ports

Four 4 inch diameter aluminum irradiation ports terminate on the balcony. These tubes curve toward the core at a constant radius and flanged, gasketed, sleeves provide for their removability. The tubes are filled with demineralized water to aid in shielding and only small plugs are necessary to reduce the radiation to tolerance levels. The opening in the shield wall is closed by a hinged metal cover plate that is provided with a padlock. Two of these ports end in the east thermal column and the other two terminate tangent to the north and south faces of the core.

3.26 Pneumatic Tubes

All three 1-1/2 inch pneumatic tube systems are removable from the reactor proper by having them not pass through the concrete shield, or if they do, by using the sleeve technique. Send-receive stations are located on the north shield face and the south shield face. The north face has set into the concrete the necessary tubes to provide a receive or send-receive station in the Chemistry Laboratory. The north station is utilized for pneumatic tube system R_2 and R_3 although only one may be used at any time. All stations are supplied with timers that automatically return the carriers. The R_1 facility is the station located on the south shield face and its irradiation stop is in the lead of the east thermal column. The R_2 facility ends in the east thermal column proper,

and R_3 terminates in the reactor core, either in the center or at the outer reflector position on the north side.

The carriers are transported by a vacuum system. Air is drawn through a Cambridge Absolute Air Filter (through the send station) and by vacuum transports the carrier to the stop. The air continues its flow by being drawn to the turbo compressor through the annulus formed by placing the send tube in an aluminum tube envelop, 2-1/4 inches in diameter. The compressor exhausts this air into the air purge ducting system. The carrier is returned by reversing the flow of air.

All pneumatic tube sending stations are padlocked and a master switch, located on the console, must be pressed to permit pneumatic tube operation. In addition to these safeguards, several additional precautions are taken against accidental operation of the R_3 system.

In order to use the R_3 facility, a section of straight tubing in the send station must be manually removed and this is then replaced with a curved tubing section connecting the send station to the R_3 facility. This section of tubing is under lock and key under the control of the supervisor. A schematic of the R_3 facility is shown in the drawing on page 28.

This facility extends over the top of the reactor structure to a swivel connection through the top cover plate and then curves into one of two positions on the reactor grid plate. A cam located under the reactor top support plate prevents the facility from being removed from the core without first removing one quarter of the elements located on the grid.

The R_3 facility is supported by the reactor top cover plate; sway is prevented by a bracket placed 10 feet below the water surface and by the tube extension that mates with a grid plate support hole.

3.27 Other Experimental Elements

Additional experimental facilities are available in the LPTR by using specially designed fuel elements to hold samples. The samples in these elements will be attached to the element and can be removed only by removing the complete assembly. They will be constructed in a manner similar to those used on the MTR.

The remainder of the steel shell above grade is reinforced to withstand the maximum possible barometric pressure differential of 2 psi. In accordance with standard commercial practice for housings of this type, a soap bubble test of the shell shall be made as follows:

1. Close all openings.
2. While holding 2 psi pressure, apply soapsuds to all welded seams, all openings in shell, doors and at base of shell.
3. If any leaks are found, release pressure, repair and retest.
4. Hold 2 psi pressure as long as required to determine leakage rate. If the total leakage is above approximately 3% per day then adjustments will be instituted to reduce the leakage.
5. Release pressure and inspect reactor building.

3.31 Special Precautions to Assure Air Tight Feature of Reactor Building

The personnel air lock, connecting the laboratory and reactor building is constructed of steel and fitted with two mechanically interlocked steel doors. The mechanical interlock prevents the simultaneous opening of the two doors. All doors in the reactor building are fabricated of steel, for rigidity, and swing inward so that any internal pressure buildup will not unseat their gaskets. In the event of a pressure buildup there is a manual pressure equalizing device for ease in opening the air lock doors. All doors are also stress relieved in order to eliminate internal stresses, induced during fabrication, which might cause warpage. The frame of each door is set with a minimum 4 inch high sill sufficient to enable the building to contain the water in the reactor pool even though the doors are open. Opening of the truck door is signaled by an indicator light mounted on the control panel in the control room. The escape doors are spring loaded to insure that they are closed at all times.

A steel building of this size, when sealed tight, could obtain an external pressure differential of 3 ounces per square inch which would cause it to buckle, although it would not rupture the shell. In order to prevent this unstable condition, and in view of the fact that inward leakage can be tolerated, a vacuum relief mechanism is provided. Two identical vacuum relief valves, mounted on the north and south sides of the building shell, are set to admit air into the building if the external pressure should exceed the internal pressure by one ounce per square inch.

The intake to the air conditioner and the cylindrical stack located at the top of the steel building dome, are the only openings to the external environment. Both of these are equipped with solenoid operated closures to seal off the building in case of an accident.

3.32 Air Conditioning System

The reactor building is heated in the winter and cooled in the summer by means of a self contained air conditioning unit located in the mechanical equipment room of the laboratory building. This unit supplies sufficient fresh outside air through a duct around the periphery of the reactor building to completely change the air at the breathing level twice every hour. Incoming outside air is continuously filtered by the air conditioner.

Air is exhausted from the reactor building through a single bladed louvre by means of a blower mounted in the stack on top of the building. (See page 31.) This louvre is fabricated of heavy guage steel, sufficient to withstand the internal pressure of the building, and is neoprene gasketed to prevent leakage of air from within the building when the louvre is closed. Fresh air will enter the building through a damper in the air conditioning system. This damper is also fabricated of neoprene gasketed heavy guage steel. Solenoids are used to open both the stack louvre and the fresh air intake damper against the action of a spring. A radiation monitor, located in the experimental facilities exhaust duct, samples all effluents from the facilities. Should the amount of air-borne radioactivity reach a predetermined level both damper and louvre solenoids would be de-energized, closing off the building from the external environment. In the event of a power failure both the solenoids would act to seal the building.

The maximum time elapse between an impulse from the experimental facilities monitor and complete sealing of the building is estimated to be less than one second. The minimum time required for air to travel from the experimental facilities monitor to the exhaust louvre in the stack is calculated to be 4-1/2 seconds. This provides adequate assurance that no highly active effluents can be discharged to the atmosphere.

3.33 Decontamination System

The reactor building is provided with a decontamination system for use in emergencies. This decontamination system is designed to filter 5600 cubic feet of air per minute, which is equivalent to filtering the entire contents of the building every 45 minutes. The flow of air is from the reactor building into the air conditioning duct

located along the periphery of the south side of the building and through bank of four "Cambridge Absolute Filters." The blower down-stream of the filter housing forces the cleaned air into the air conditioning duct along the periphery of the north side of the building. Clean-up of the air is then effected by continuously sweeping air through the building from north to south. This operation may be repeated as often as is necessary until the level of air-borne activity is reduced. The "Cambridge Absolute Filters" require no maintenance and the blow-off of collected material is impossible. Based upon 0.3 micron particles, these filters have an efficiency of 99.95% or better and the cleaning efficiency is independent of intake air velocity. These filters are housed in a specially designed filter box, tight to 2 psi internal pressure, which is located outside the reactor building. The cover of the filter box is removable for easy replacement of contaminated filters. These filters can also be used under normal operating conditions to cleanup a by-pass stream of the air entering the reactor room.

3.34 Reactor Building Flooring

The monolithic concrete flooring within the reactor building will be covered with a surface hardener and an appropriate commercial plastic sealer. This sealer is applied in three colored coats to indicate degree of wear. The walls of the building are covered with a paint suitable for decontamination purposes.

Several floor drains are provided in the floor, magnet pit and equipment pit. All floor drains lead to underground waste tanks which are vented to the stack. (See page 38 .)

3.35 Mechanical Equipment Pit

A mechanical equipment pit 15' x 18' x 13' feet shown in the drawing on page 33 , is used to contain the following major pieces of equipment:

1. Heat exchanger, with provision for two future units
2. Demineralizers
3. Pool water supply pump
4. Experimental facilities blower
5. Pneumatic system turbo-compressor
6. Process filters
7. Sump pump
8. Drain pump

All motors and pumps except the sump pump are mounted sufficiently above the floor level in order that they remain dry if the total contents of the pool should be spilled into the pit.

into the waste tanks. Access to the pit is through removable reinforced, concrete slabs which form a part of the main floor of the reactor building.

3.36 Crane and Monorail

The main crane, of 15 tons rated capacity, is an overhead, electric travelling crane with a floor coverage of 51 feet by 34 feet. The center of the reactor is coincident with the geometric center of the floor coverage. For added flexibility an auxiliary hoist of 1 ton capacity is provided with the same floor coverage. Both the main and auxiliary hoists have a maximum hook height of 37 feet. Further lifting flexibility is obtained by virtue of a two ton monorail hoist, situated above the main crane. This has a 32 foot run perpendicular to main crane rail and a hook height of 45 feet.

The main crane hoist motors are variable speed motors, capable of lifting their rated hook loads as slow as 3-1/2 feet per minute. Trolley travel of the main crane varies from 10 to 50 feet per minute. The monorail hoist motor is also a variable speed motor, capable of lifting its rated hook load at 3-1/2 feet per minute. On all hoists accuracy of control is maintained through magnetic brakes.

3.37 Neutron Windows

Two aluminum ports, 2 feet in diameter, located as shown by drawing on page 30, are coincident with the centerlines of the 12 inch beam hole and the 6 inch beam hole. These ports, bolted to a gasketed frame in the building shell are air tight and provide for the possible extension of neutron beams which may be necessary in making "time of flight" experiments. Also, it is possible to connect decontamination equipment to these flanges.

3.38 Fuel Element and Source Storage Pit

This pit is located below the reactor room floor and will be used for storage of fuel elements, plugs, and "hot" substances. Access to the pit shall be through a steel cover plate, flush with the floor which is securely padlocked. Only authorized personnel will be allowed to open this pit. Below the steel cover plate are carbon steel tubes provided for beam hole plugs and thirty 4-inch diameter aluminum tubes strategically placed so that a critical configuration of fuel elements is not possible. These tubes are sunk deep into the ground to be able to use water shielding, and they are capped at the bottom to prevent leakage into the subsoil.

The LPTR reactor core, experimental facilities, and other auxiliary equipment will require systems which will continuously circulate cooling water or air through some facilities or intermittently purge others with demineralized water. Outlined below is a description of the separate systems and a summary of the design and operating characteristics of each. The complete piping array is designed to permit the flexible control of all operating and auxiliary equipment. Liberal allowances are made to permit safe operation of functional components in cases of remote possibilities of hazardous and non-standard operations which might be occasioned by a core or facilities equipment failure. A schematic of the flow systems is included on page 38.

3.41 Main Loop

The main loop cooling system consists of appropriate piping and valves for circulating water at 1000 gpm through the core in a downward direction, through a holdup tank and into the equipment pit where a circulating pump maintains flow through a tube and shell heat exchanger and subsequently, back into the reactor tank. The system holds an estimated 12,000 gallons of demineralized water. The water enters the loop from the reactor tank directly beneath the reactor core, developing an adequate flow through the core. The heat exchanger has a design capacity of 3,500,000 Btu/Hr. Operating at a power level of 1 MW there will be a 7°F temperature rise in the reactor cooling water through the core from 85°F to 92°F. Cooling water to the heat exchanger is supplied at 1400 gpm from an external cooling tower at 80°F. The exit temperature of the heat exchanger cooling water is 85°F. In the main loop a 3,000 gallon holdup tank has been specified to allow an approximate 3 minute holdup of the bulk stream for radioactive decay of N-16 prior to entry into the equipment pit. Materials of construction for all of this equipment will be aluminum with the exception of the steel circulating pump and valves. Isolation sections are installed at appropriate points to prevent galvanic corrosion between the iron and aluminum.

In the event 5 MW operation at some later date is desired, all underground process piping and the 3,000 gallon holdup tank are sufficiently sized to provide for the necessary increased flow rate. An additional circulating pump and increased heat exchange capacity will be needed, however.

[illegible] the reactor tank through intentional or inadvertent operation of drain loop valving will be 30 minutes. Under the worst condition involving equipment failure, which would be a break in the 8 inch main loop line, 4-1/2 minutes would be required to drain the reactor tank.

The main loop will include means of measuring flow rate, temperature, conductivity, and radioactivity at appropriate points near the reactor and heat exchanger. In the reactor tank, a liquid level indicator - alarm and temperature indicator will be installed.

3.42 Demineralizer-Filter

A by-pass stream of approximately 15 gpm will be withdrawn continuously from the main loop and introduced into an ion exchange demineralizer and filter unit. This demineralizer unit will contain an excess of cation capacity for the removal of radioactive sodium which is expected to originate from n-α reaction within the reactor core. A separate cation exchange will provide means of removing most radioactive contaminants from the stream prior to entry of the stream into a mixed-bed demineralizer containing both anion and cation resins which will complete the removal of ionized particles. In this system the anion exchange resin, which is quite susceptible to radiation, will be protected from exposure to the bulk of the radioactivity. The filter unit will remove any small particles of exchanger resin which might be entrained from the demineralizer units. It is expected that the specific conductivity of the water leaving the demineralizer will maintain a maximum of 1 micromho - centimeter. With this amount of purification a specific conductivity in the main loop water of between 1 and 2 micromhos-centimeter will be maintained.

Can a mixed bed be adequately maintained.

3.43 Drain Loop

To permit occasional draining of the reactor tank, temporary storage of reactor water is provided by an underground 10,000 gallon storage tank with connections to the bottom of the reactor tank. Draining is effected by gravity. The storage tank is provided with a protective coating to avoid entrainment of ionized particles. In the event that the reactor tank overflows, a gutter around the inside edge of the tank top is connected to a pipe which leads to the 10,000 gallon storage tank. The storage tank water also can be discharged to the waste disposal system as well as back into the main loop system. The tank is vented through the main building stack. Should contaminated water enter the storage tank it can be withdrawn through appropriate transfer lines and valves to external disposal facilities. The storage tank is equipped with a liquid level indicator and alarm and a temperature recorder.

3.44 Waste Disposal

To provide for proper handling of radioactive liquid wastes that may require temporary storage two underground 1500 gallon plastic-coated tanks are provided. An outer equipment pit gutter, all laboratory drains, and the reactor room floor drains are serviced by the two tanks. The magnet pit drain, reactor drain line, and the inner equipment pit drain flow into the equipment pit sump which is emptied by means of a sump pump which discharges the water into either of the two waste tanks. Also all waste solutions from the demineralizer regeneration operations will be transferred into the two waste tanks for subsequent disposal. The total capacity of the main loop system can be transferred through the waste tanks or storage tank for subsequent disposal to sewer lines or to external waste disposal equipment. Manipulation of valving to transfer any contaminated water to vessels external to the reactor system is accomplished with remote valving located outside the reactor building.

The two waste tanks are interconnected with common overflow lines. The instrumentation provided for the two waste tanks will be radioactive monitoring equipment plus liquid level indicators and alarms and temperature recorder. Also the equipment pit sump will be equipped with a liquid level indicator and alarm.

3.45 Irradiation Port Loop

The four irradiation port facilities will be provided with a means of purging each tube with demineralized water directly from the exit side of the demineralizer. This water will perform a shielding function and will not be circulated. Purging will be effected only for purposes of maintenance or in the event the conductivity level of the water presents a corrosion problem. Sufficient pressure to facilitate draining of the ports is provided by a 10 gpm pump located in the equipment pit. Overflow piping to the waste disposal tanks is provided from each port. Instrumentation in connection with the irradiation port facilities consists of a liquid level alarm near the top of each facility tube.

3.46 The Beam Hole Loops

Each of the six beam plugs is provided with circulating cooling water from the main loop. The discharge pressure of the 1000 gpm pump is used to circulate process reactor water through each facility plug and is

introduced into the [illegible] system in the low-pressure section of the primary loop. The water in the annulus between the sleeve and tube of the B-6 facility will be continually circulated by allowing it to drain from the pool into the waste tanks.

3.47 Exhaust Loops

The stagnant air passages contained in the six beam ports, through tube, thermal column, pneumatic tubes, and the area above the water in the reactor tank have the potential of accumulating radioactive argon over sustained periods of operation. In order that this hazard might be removed, a centrifugal exhauster (capacity of 535 cfm operating against a static head of 5 inches of water) is connected to these facilities for continual air circulation. The exhauster is located in the equipment pit and draws the air stream through a "Cambridge Absolute Air Filter" preceded by a prefilter and discharges to the main building stack. The instrumentation connected with this system consists of radiation monitors continuously sampling air at the blower outlet and at the exit end of the stack. Sufficient pressure detection equipment is located at appropriate points on either side of the filter unit and on the suction side of the exhauster.

check with Engineering

LAWRENCE BERKELEY LABORATORY

ADMINISTRATIVE FILES

DC FILES

1958

FOLDER TITLE

MAJOR INSTRUMENTS

Reactors - Livermore Pool Type Reactor (LPTR)

THIS INSTRUMENT EXECUTED WITHOUT REVISION

Reynolds

THIS COPY FOR

UNITED STATES
ATOMIC ENERGY COMMISSION
SAN FRANCISCO OPERATIONS OFFICE

~~518 - 17th Street~~
Oakland 12, California

Modification No. 7
Change Order to
Contract No. AT(04-3)-70
January 7, 1958

Sheet 1 of 2

CONFORMED COPY

Route	Signed
EOL	
DC	
WBR	
RWB	
GWM	
WDD	
LOV	
WBH	
NOG	
RLH	
EID	
MHA	
MLM	
JJ	
GG	

Return to UC 149 Bldg. 5

Foster Wheeler Corporation
666 Fifth Avenue
New York 19, New York

Gentlemen:

Reference is made to Article IV of your Contract No. AT(04-3)-70, dated June 30, 1955, for design, construction and test operation of a one-megawatt pool-type reactor and associated building located at the Atomic Energy Commission's Livermore Site, Alameda County, California.

It has been determined that it is necessary and in the best interest of the Government to modify said contract in certain particulars:

1. Extend the reactor shield foundation from a depth of 4'-0" from the top of the floor slab to a depth of approximately 4'-6" to reach soil of a proper bearing capacity.

2. Increase contract price for this Item No. 1 $418.00

2. Extend the laboratory electrical service lines in accordance with UCRL Drawing No. L193M1004E, attached hereto and by this reference made a part thereof.

   Increase contract price for this Item No. 2 $411.14

3. Revise reactor building illumination system in accordance with the Austin Company's drawing E-5, revised December 9, 1957, entitled "High Bay Lighting - Reactor Building", attached hereto and by this reference made a part thereof.

   Increase contract price for this Item No. 3 $4,389.00

4. As a result of the modifications outlined herein in Item Nos. 1 through 3, Phase III of the contract price is increased $5,218.14 to a new total of $314,775.80 and the new total contract price is $420,350.55.

5. Due to a strike, revisions made in Item No. 3, above, delay in fuel elements furnished by the Commission and development of the need for alodizing of fuel elements at a critical time, it is understood and agreed that the contract performance time is extended through the close of business February 15, 1958.

Mr. Grant
Reactor

Modification No. 7
Change Order to
Contract No. AT(04-3)-70
January 7, 1958

Sheet 2 of 2

6. In addition to other agreements or stipulations above set forth, it is agreed that:

   a. The work which is covered by these modifications does not include any work which the contractor is already required to perform by the terms of the contract.

   b. The additional charge, above set forth, does not include any amount which should be borne by the contractor under the original terms of the contract.

   c. All other items and conditions of said contract as it heretofore may have been modified shall be and remain the same.

If the foregoing modifications of said contract are satisfactory, please note your acceptance thereof in the space provided below:

THE UNITED STATES OF AMERICA
BY: ATOMIC ENERGY COMMISSION

By /s/ J. E. Armstrong
J. E. Armstrong, Director
Engineering Division

The foregoing modifications of said contract are hereby accepted this 16 day of January, 1958.

FOSTER WHEELER CORPORATION

By /s/ Martin Frisch

Title Vice President

I, Vincent J. Schwingel, certify that I am the Sec. of the corporation named as contractor herein; that Martin Frisch who signed this agreement on behalf of the contractor was then Vice Pres. of said corporation; that said agreement was duly signed for and on behalf of said corporation by authority of its governing body, and is within the scope of its corporate powers.

IN WITNESS WHEREOF, I have hereunto affixed my hand and the seal of said corporation this 16 day of January, 1958.

/s/ Vincent J. Schwingel
Secretary

(Corporate Seal)

Budget

Reynolds

CONFORMED COPY

MODIFICATION NO. 6
SUPPLEMENTAL AGREEMENT TO
CONTRACT NO. AT(04-3)-70

SUPPLEMENTAL AGREEMENT

Route	Signed
	EOL
	EC
✓	WSR
✓	RWB
	GWM
	WDD
✓	LOV
	WSH
	NOG
	RLH
	EID
	MHA
	MLM
	JJ
	GG
Return to 149 Bldg.	

This SUPPLEMENTAL AGREEMENT is entered into this 6 day of DEC, 1957, effective September 11, 1957, between the UNITED STATES OF AMERICA (called the "Government"), acting through the UNITED STATES ATOMIC ENERGY COMMISSION (called the "Commission"), and the FOSTER WHEELER CORPORATION (called the "Contractor"), a corporation existing under and by virtue of the laws of the State of New York, with its prin ipal offices located at 165 Broadway, New York 6, New York.

WHEREAS, the Commission desires to obtain architect-engineer inspection services from the Contractor for certain fuel elements furnished to the Contractor by the Commission for installation in the LPTR which said services were not previously provided for by this contract; and

WHEREAS, the Contractor is agreeable thereto upon the terms and conditions hereinafter set forth.

AGREEMENT - NOW THEREFORE - Contract No. AT(04-3)-70, as previously amended, is further amended as follows:

1. There is added to the Phase III subparagraph of paragraph 2. of Article I of the contract the following sentence after the words " - Appendix D to this contract":

   "Contractor shall also commencing on or after September 1, 1957 furnish the necessary engineering and technical services to inspect and shall inspect as soon as reasonably possible thereafter certain LPTR fuel elements furnished by the Government, said inspection work to be performed as set forth in letter to Contractor dated October 28, 1957 and signed by J. E. Armstrong. Upon completion of and performance of said services Contractor shall be paid the lump sum of $783.41 for such work upon presentation of proper invoices and vouchers, such payment to be made independently of any of the provisions of paragraphs 2 and 3 of Article III of the contract entitled 'Payment'."

2. So much of paragraph 1. of Article III "Payment" as amended as reads " - the sum of three hundred eight thousand, seven hundred seventy-four dollars and twenty-five cents ($308,774.25) - " is deleted and there is substituted therefor the words and figures " - the sum of three hundred nine thousand, five hundred fifty-seven dollars and sixty-six cents ($309,557.66) - ".

3. In addition to funds previously obligated for payment to the Contractor hereunder the Commission hereby obligates the additional sum of $783.41 for a total obligation of $309,557.66 under the contract.

Maj. Inst. Reactor (LPTR)

Except as herein provided, all the terms and conditions of Contract No. AT(04-3)-70, as previously amended, shall continue in full force and effect.

IN WITNESS WHEREOF, the Government and the Contractor have executed this Supplemental Agreement, intending to be legally bound thereby.

THE UNITED STATES OF AMERICA

By ~~257~~ /s/ J. E. Armstrong
J. E. Armstrong, Director
Engineering Division
San Francisco Operations Office
U. S. Atomic Energy Commission

FOSTER WHEELER CORPORATION

By /s/ Martin Frisch
Martin Frisch
Title Vice Pres.

I, /s/ Vincent J. Schwingel, certify that I am the Sec. of the corporation named as Contractor herein; that Martin Frisch who signed this Supplemental Agreement on behalf of the Contractor was then Vice Pres. of said corporation; that said Supplemental Agreement was duly signed for and on behalf of said corporation by authority of its governing body, and is within the scope of its powers.

IN WITNESS WHEREOF, I have hereunto affixed my hand and the seal of said corporation this 16th day of Dec., 1957.

SEAL

/s/ Vincent J. Schwingel

Route		Signed
	EOL	
	DC	
✓	WBR	✓
	RWB	
	GWM	
	WDD	
	LOV	
	WBH	
	NOG	
	RLH	
	EID	
	MWA	
	MEM	
	JJ	
	GG	
Return to UCRL 149 Bldg. 50		

February 13, 1958

Mr. H. A. Fidler
SAN Operations Office
Atomic Energy Commission
516-17th
Oakland, California

Dear Mr. Fidler:

LPTR TEST AT 5 MEGAWATTS

The contract for the design and construction of the LPTR specifies that the reactor itself shall be capable of five megawatt operation when additional cooling capacity is made available. The only way to ascertain whether the LPTR meets these specifications is to operate it at five megawatts for a brief period. Such operation is necessary because the heat transfer characteristics of the lead-water surfaces are complex non-linear functions of the power and cannot be extrapolated from lower powers. The same conditions obtain for possible hot spots in the fuel elements of the core.

It is particularly important that these effects be investigated before there has been prolonged operation at one megawatt since any remedial measures necessary will require access to the core. After any appreciable one megawatt operation the stored fission fragments in the fuel plates will prohibit such access and a complete clean core loading would be required.

This problem has been discussed with the Foster Wheeler people and they are of the opinion that such testing is not required by their contract. Mr. Armstrong has been contacted regarding this conflict of opinion and he is considering the question in light of the contract. Should such a test be a legitimate part of the contract, it should be recalled that the Foster-Wheeler crew is scheduled to leave March 1, 1958 and so immediate action is called for.

Should such a test be undertaken, it would be under the following conditions.

1) There are twenty thermocouples imbedded in the lead thermal shield and fifty in the concrete. In addition there is one fuel element with five thermocouples bonded to the surface. These thermocouples will be read on a ten point recorder equipped with a manual selector switch which will permit reading of successive groups of ten couples up to one hundred twenty total.

Maj. Instr
Reactors

2) Radiation intensities around the reactor will be monitored at one megawatt and the 5-megawatt test will not be run unless extrapolation shows no unsafe condition, will result.

3) No more than normal one megawatt excess reactivity will be available.

4) Previous operation will have been less than 50 MWH so the total amount of fission fragments in the core will be small.

5) The approach to 5-megawatt operation will be slow enough to permit all thermocouples to be read at least twice during the rise from one megawatt to five.

6) The test will be stopped immediately should any of the following conditions appear:

   a) High radiation levels in reactor room or process equipment.

   b) Core outlet water temperature in excess of 130°F.

   c) Concrete temperature in excess of 250°F.

   d) Lead temperature in excess of 500°F.

   e) Fuel plate temperature in excess of 200°F.

   f) Any indication of core steaming, such as bubbles or reactivity fluctuations.

The temperature limits have been fixed in consideration of the softening point of lead (~ 550°) and the boiling point of water.

The test will be continued until either the temperatures being monitored stabilize or one of the conditions in precaution 3 above occurs. In no case, however, will the total power expended exceed 40-megawatt hours, the equivalent of one weeks single shift operations.

Very truly yours,

A. J. Kirschbaum

AJK:khs

cc: R. Hughey
J. Armstrong
W.B. Reynolds
D. Sewell
LB
N Division File

May 2, 1958

TO: General Administrative Distribution List -
Livermore and Berkeley

FROM: Albert J. Kirschbaum, Division Leader, Neutronics Division

SUBJECT: Open House

The Neutronics Division of the Radiation Laboratory cordially invites the employees of U.C.R.L., Livermore and Berkeley and their families to attend an Open House from 1:00 p.m. to 5:00 p.m. on Saturday, May 17, 1958, at the Livermore Pool Type Reactor Building of the University of California Radiation Laboratory, Livermore Site, to celebrate the completion of the new reactor.

This one megawatt research reactor is the only high power research reactor in operation on the West Coast. Models and equipment demonstrating both the operation and use of the reactor will be displayed in the reactor building. Members of the Neutronics Division will be on hand to answer questions.

Entrance to the project is available via Greenville road gate with parking facilities south of the reactor building.

Neutronics Division looks forward to meeting the employees of U.C.R.L. and their families and demonstrating to them, in some measure, the activities of the LPTR in the field of nuclear research.

AJK:AC

LAWRENCE BERKELEY LABORATORY

ADMINISTRATIVE FILES

DC FILES

1961

FOLDER TITLE

MAJOR INSTRUMENTS

REACTORS - LIVERMORE POOL TYPE

REACTOR (LPTR)

Aerojet-General NUCLEONICS
A SUBSIDIARY OF AEROJET-GENERAL CORPORATION
P. O. BOX 77, SAN RAMON, CALIFORNIA (NEAR SAN FRANCISCO) TWX NUMBER: DANVILLE 1516
TELEPHONE VERNON 7-5311 • CABLE ADDRESS: AGNU

THE GENERAL TIRE

Route Signed
JSL
Return to LRL
Bldg. 53

June 16, 1961
HEB:ln

Mr. W. B. Reynolds
University of California
Lawrence Radiation Laboratory
Berkeley, California

Subject: Request For Approval to Use Irradiation Space in the LPTR at Livermore.

Dear Mr. Reynolds:

This letter represents a request by Aerojet-General Nucleonics to the University of California - Livermore Radiation Laboratory for permission to use irradiation space in the LPTR at Livermore.

Aerojet-General Nucleonics has been awarded Contract No. AF 33(600)-42996 by the Aeronautical System Division, Wright Patterson Air Force Base, for continuation of the investigation of a manufacturing method for the formation of hydrazine by fission fragment irradiation of liquid ammonia. The exploratory investigations to be conducted within the scope of the contract will help demonstrate the technical and economic feasibility of large scale production of hydrazine using this method. A successful in-reactor test can be accomplished using a thermal flux within the range of 10^{10} to 10^{11} n/cm^2 - sec which LPTR could furnish.

It is to be noted that the in-reactor experiments required under the above mentioned contract are a continuation of the in-reactor experiments that were conducted in the Livermore Pool Type Reactor under Aerojet-General Nucleonics Purchase Order No. OP-002219, dated November 22, 1960, issued to the University of California - Lawrence Radiation Laboratory under Air Force Contract No. AF 33(600)-40878. Minor modifications to the equipment previously used, and slight deviations in operations will be required. Contemplated modifications and deviations will be discussed with cognizant LPTR personnel, and upon agreement thereto, will be incorporated in Aerojet-General Nucleonics' Safeguards Report AN-253 dated October 11, 1960 by amendment. Safeguards Report AN-253 was incorporated by reference in the General Provisions of the above mentioned Aerojet-General Nucleonics' purchase order.

RECEIVED
DIRECTOR'S OFFICE
BERKELEY
JUN 19 1961
LPTR

Assuming a favorable reaction to our request, Aerojet-General Nucleonics would like to be informed of your recommendations as to the basis for use charges. We feel that all other associated problems of security, access, and coordination can be arranged to the satisfaction of the University of California Lawrence Radiation Laboratory.

Our present time schedule for this contract calls for operational in-reactor experiments to be conducted during the months commencing with August 1961, and ending September 1963. In order to meet these required dates it will be necessary to have positive arrangements made concerning the use of the LPTR as soon as possible.

Aerojet-General Nucleonics will be glad to offer the services of our technical people for any review of the proposed experiments.

A copy of our letter dated June 16, 1961, to E. C. Shute, Manager, of the San Francisco Operations Office; U. S. Atomic Energy Commission, is enclosed herewith for your information.

Very truly yours,

AEROJET-GENERAL NUCLEONICS

H. E. Bohrer

H. E. Bohrer
Manager, Procurement

Encl: Letter to E. C. Shute, Manager
U. S. Atomic Energy Commission
San Francisco, Calif.

cc: C. Blue, UCLRL, Livermore, Calif.

6/24/61 → Fitzgerald
BBB

HEADQUARTERS

Aeronautical Systems Division

AIR FORCE SYSTEMS COMMAND
UNITED STATES AIR FORCE
WRIGHT-PATTERSON AIR FORCE BASE, OHIO

Route	Signed
✓	✓

Return to LRL 149 Bldg. 50

[illegible] /[illegible]   [illegible] August [illegible]

Contract [illegible] 33(600)-42996
[illegible] Program - [illegible] Project 7-840

Mr. [illegible], Manager
San Francisco Operations Office
U. S. Atomic Energy Commission
2111 Bancroft Way
Berkeley 4, California

1. The U. S. Air Force, through Aeronautical Systems Division, Contract [illegible]-42996, has authorized Aerojet-General Nucleonics, [illegible], California, to accomplish process studies and investigations leading to the development of an economically feasible method for the production of [illegible] by using a nuclear reactor. This work is a continuation of Contract [illegible] 33(600)-40078.

2. [illegible] cost of the above-cited [illegible] for [illegible] or use fees in relation to the use of a reactor in the performance of the contract.

3. This will constitute Air Force concurrence in connection with the [illegible] by AGN of irradiation space in the LPTR. It is requested, therefore, that AGN be authorized to use the E. O. Lawrence Radiation Laboratory [illegible] type reactor, on a non-interference basis as may be agreed upon by AGN and LRL.

[illegible]
Contracting Officer

Copies to:
San Francisco [illegible]
Lawrence Radiation Lab.
Aerojet-General Nucleonics

8/8/61 copies to:
W. D. Douglass
L. A. FitzGerald
E. E. Hill
H. B. Keller
A. J. Kirschbaum
O. L. Meadors
W. B. Reynolds
D. C. Sewell/J. Foster
R. Southworth

RECEIVED
DIRECTOR'S OFFICE
BERKELEY
AUG - 9 1961

UNITED STATES
ATOMIC ENERGY COMMISSION
SAN FRANCISCO OPERATIONS OFFICE

2111 BANCROFT WAY
BERKELEY 4,
CALIFORNIA

IN REPLY REFER TO:
R:YLD

AUG 2 4 1961

Mr. Duane C. Sewell
Associate Director
University of California
Lawrence Radiation Laboratory
P. O. Box 808
Livermore, California

Subject: B_4C REACTOR CONTROL RODS - LPTR

Dear Mr. Sewell:

The reactors which have boron carbide control rods have been of some concern because of swelling problems in the rods. One such incident involved the pool reactor at the University of Michigan as reported in AMFP 110-2, "Report to the AEC Concerning the Deformation of the Ford Nuclear Reactor Shim-Safety Rods." Recently there was a similar experience at the LPTR which will be described in a report to be issued shortly we understand.

We have been requested to obtain information on the LPTR control rod performance as part of a survey being made on all reactors using this type of rod. We need two copies of the information outlined below:

1. An engineering drawing of the boron carbide safety rods used in the facility, including identification or a list of materials used and their location in the rods, and design dimensions and tolerances.

2. A brief outline of steps used in the manufacture of the rods. Precautions observed to clean B_4C from the area of the final weld closure should be included.

3. Tests applied to the rods, including any checks of leak-tightness.

8/6/
2 for eye a.c.t to
e g. [illegible]
8/29/61 for action.

4. Specifications on moisture content of B_4C at time of loading into rods or precautions to keep moisture content minimal during rod fabrication.

5. Original measured width and thickness dimensions if these are available; dimensions at subsequent measurements and dimensions at the present time; calculated or measured clearance of each rod in its channel.

6. An indication of how much internal pressure would have to build up in a rod in order for it to jam in the guide channel, and an estimate of present internal pressure.

7. A description of any swelling and/or sticking of control rods observed.

8. A description of any off-gassing observed from any control rod.

9. A description of procedures used for checking rod dimensions and an indication of future schedule for such checking.

10. Any additional information related to this problem which it is felt may be helpful.

If the report on the recent LPTR rod swelling will be available within a couple weeks, perhaps it could be included with the above requested information.

Mr. Sewell
mailed Short
a copy of the
Knolls Bulletin
Jones on 8/24/61

Your assistance in providing a timely response to this request is appreciated.

Sincerely yours,

Russell H. Ball

Russell H. Ball
Assistant Manager for
Technical Operations

AUG 25 1961
RECEIVED
DIRECTOR'S OFFICE
Knolls Laboratory
HARTFORD

UNIVERSITY OF CALIFORNIA

LAWRENCE RADIATION LABORATORY
BOX 808
LIVERMORE CALIFORNIA

August 24, 1961

Mr. E. C. Shute, Manager
San Francisco Operations Office
U.S. Atomic Energy Commission
2111 Bancroft Way
Berkeley 4, California

Dear Mr. Shute:

Enclosed is a copy of a memorandum by Al Kirschbaum which briefly summarizes the swollen shim rod incident which occurred on the LPTR on July 18-19, 1961.

I believe this gives all of the information that you requested informally when we discussed this incident at the time it occurred.

Sincerely,

ORIGINAL SIGNED BY
DUANE C. SEWELL

D. C. Sewell
Associate Director
LRL, Livermore

DCS hrp
Enc.

cc: W. B. Reynolds

RECEIVED
DIRECTOR'S OFFICE
BERKELEY
AUG 25 1961
Management Analysis
LPTR

MEMORANDUM: 16 August 1961

TO: D. C. Sewell

FROM: A. J. Kirschbaum

SUBJECT: Swollen Shim Rod Incident at the LPTR

At 0805, July 19 1961, before attempting the scheduled removal of sources from the reactor core, a staff physicist and reactor operator observed that the D-actuator rod was severely bent. There was no other apparent damage to the core. The Assistant Reactor Supervisor and N D vision Leader were immediately notified. It was determined by visual inspection that D-shim rod was stuck in a position one third of the way out of the core. This condition evidently had developed during shutdown at midnight the night before with no indication of its existence on the control console. Since there was no immediate danger, (two rods are sufficient for shutdown), Graphic Arts was notified and took pictures of the condition at approximately 0840. At 0900, 6 fuel elements were removed to the fuel storage rack. At 0930, D-rod actuator was withdrawn to 9.8 meter inches before the clutch made light went out. At 1015, 11 more elements were removed to the storage rack, and the actuator rod, magnet and drive assembly or shim rod D were removed. The face of the magnet read 50 mr. At 1045, special element 1-D, (the special fuel element containing D shim rod), was removed to the storage rack and shim rod D was removed from it and pulled to the surface of the pool for inspection. The shim rod was easily removed as it had not become wedged in the special element to any great extent. During this procedure a Hazards Control man was on duty and respirators were available in case the air monitors located at the top of the pool showed any abnormal activity. No unusual radiation was detected. With one of the special handling tools, it was determined that swelling had started approximately 14 inches above the bottom of the shim rod. The swelling appeared to be rather uniform to the top of the shim rod but due to the high radiation field a close inspection was not possible. The other shim rods, A, B, and C, were then individually disconnected from their dutchman and manually checked for ease of insertion and withdrawal. It appeared that the shock absorber of shim rod B was not functioning correctly, and that it did not move as freely as A or C, so it was withdrawn with a special handling tool and stored in the Aerojet facility along with shim rod D.

On July 20, a replacement shim rod was placed in special element 1-B. A new special element, 1-E, was placed in the fuel storage rack and a new replacement shim rod was placed in it. Although there was no apparent damage to the fuel element 1-D, a replacement was made to remove any question of possible damage to it. Element 1-E was then replaced in the core in position D-3 and a new actuator rod and drive assembly were installed. Prior to installation, both new shim rods were carefully checked and found to be leak tight.

On July 21, the shim rod drop tests and maximum drop currents were determined for the shim rods, A, C, and D.

On July 24, the shim rod drop tests and maximum drop currents were determined for shim rod B and the critical assembly was started.

On July 25 the critical assembly was completed and all rods were calibrated. The new shim rods were found to be equivalent to the old rods. The following tables indicate the rod drop times and shim rod worth before and after this incident.

Rod Drop Times (Slow Scram)

Shim Rod	July 17	July 24
A	540 ms	525 ms
B	640 ms	590 ms
C	560 ms	560 ms
D	590 ms	570 ms

Shim Rod Worth

Shim Rod	July 17	July 26
A	2.8%Δk/k	2.8%Δk/k
B	2.4%Δk/k	2.3%Δk/k
C	2.6%Δk/k	2.4%Δk/k
D	2.9%Δk/k	2.8%Δk/k
Total	10.7	10.3

Subsequent inspection of the D shim rod showed that it had increased in dimension approximately 0.105" with the deformation occuring in the upper third of the shim rod.

Normal two shift operation was resumed on July 26.

A. J. Kirschbaum

AJKirschbaum:b
Enc. (3)
cc: D. Sewell
A. Kirschbaum (2)
File

LRL Livermore
Graphic Arts Dept.
Neg. No. 25334

UNCLASSIFIED
WITHOUT CAPTION

NOT FOR PUBLICATION
WITHOUT PERMISSION

LRL Livermore
Graphic Arts Dept.
Inv. No. 23-233
RICHARD LAWRENCE
CORPORATION

Route	Signed
EMM	
✓ WBR	✓
RAF	
GWM	
WDD	
WBH	
JSL	
Return to LRL 149 Bldg. 50	

MEMORANDUM: 26 October 1961

TO: Distribution

FROM: Ernest E. Hill

SUBJECT: AGN Hydrazine Program Safeguards Report

A copy of the Hydrazine Process Development Program Phase II LPSR Safeguards Report AN-423, is enclosed for your information and file.

Ernest E. Hill

EEH:jb

Distribution: W. Reynolds ← Copy No. 1
B. Sewell Copy No. 2
A. Hirschbaum Copy No. 3
R. Batzel Copy No. 4
H. Keller Copy No. 5
D. Nielsen Copy No. 6
D. Stannard Copy No. 7
E. Hill Copy No. 8
G. Bepley Copy No. 9
Petruzzi Copy No. 10
Pina Copy No. 11
Cummings Copy No. 12
R. Fleming Copy No. 13
M. Zhenevich Copy No. 14
File Copy No. 15

RECEIVED
DIRECTOR'S OFFICE
BERKELEY
OCT 27 1961

November 3, 1961

AN-423

HYDRAZINE PROCESS DEVELOPMENT PROGRAM

Phase 2, LPTR Safeguards Report

AF Contract No. 33(600)-42996

Approved by: D. C. Sewell
D. C. Sewell
Associate Director

Reviewed by: R a James
for R. E. Batzel
Associate Director

A. J. Kirschbaum
A. J. Kirschbaum
N Division

H. B. Keller
H. B. Keller
Hazards Control Dept.

D. E. Nielsen
D. E. Nielsen
Test Division

AN-423
AF Contract No.
33(600)-42996

HYDRAZINE PROCESS DEVELOPMENT PROGRAM
PHASE 2, LPTR SAFEGUARDS REPORT

October, 1961

Prepared by R. I. Miller
R. I. Miller
Project Engineer

Approved by J. H. Cusack by J. R. Stoutenger
J. H. Cusack
Program Manager

Approved by H. P. Yockey
H. P. Yockey, Manager
Research and Development Division

TABLE OF CONTENTS

I. SUMMARY 1

II. DESCRIPTION OF THE HYDRAZINE PROCESS DEVELOPMENT PROGRAM

A. Purpose of the Program 3

B. Phases of the Program 4

C. Phase 2 Work Scope and Organization 5

D. Information Expected From Continued LPTR Irradiations 10

II. DESCRIPTION OF LIVERMORE POOL TYPE REACTOR FACILITY AND LRL-AGN LIAISON

A. LPTR Facility and Administration 14

B. Organization of AGN Personnel at the LPTR Facility 16

C. Installation and Operation of the Hydrazine Program Test Equipment 16

IV. IN-REACTOR CAPSULE DESIGN

A. The Primary Vessel 17

B. The Secondary Vessel 18

C. Capsule Test Port, Storage Position and Support Winch 19

D. Instrumentation and Controls 20

E. Flux Monitor 21

V. TESTING, INSTALLATION AND OPERATING PROCEDURES

A. Pre-Irradiation Tests and Check-Out (At AGN) 22

B. Installation Procedure 22

C. Irradiation Test and Operational Procedure 23

D. Capsule Removal Procedure 26

E. Irradiation Schedule 27

TABLE OF CONTENTS (CONT.)

VI. HAZARDS ANALYSIS

A. Nuclear 28

B. Radiation 28

C. Chemical 29

D. Mechanical 30

APPENDICES

A. Stress Calculations for the In-Reactor Test Capsule 31

B. Heat Generation and Transfer Calculations 35

C. Fission Product and Induced Radiation Dosage Calculations 40

CHARTS AND ILLUSTRATIONS

Figure		Follows Page No.
1.	Hydrazine Loop Assembly	1
2.	P & I Diagram for Secondary Capsule Hydrazine Loop	1
3.	Hydrazine Loop Installation in Livermore Pool Type Reactor	2
4.	PEP Network	5
5.	Wiring Diagram - Hydrazine Loop Control	20
6.	Secondary Vessel and Flux Monitor Holder	21
C-1, C-2, C-3, C-4	Dose Rate vs Shutdown Time (for surface of secondary capsule and 1 ft from capsule through 1 in. Pb)	41

I. SUMMARY

The purpose of the Hydrazine Process Development Program - Phase 2 is to prove the feasibility of the continuous production and separation of hydrazine in a reactor loop; to study this process and its associated problem areas, and to further optimize a practical scale-up of the system for economic evaluation. An integral part of this program is the continuation of the capsule type irradiations performed with the Livermore Pool Type Reactor at Lawrence Radiation Laboratory during Phase 1 of the program.

The hazards associated with the Hydrazine Program testing at the LPTR are discussed in Section VI. Possible hazards have been placed in four categories: (1) nuclear, (2) radiation, (3) chemical and (4) mechanical. Based on the design safety factors which have been used and the nature of the possible accidents which could occur, it has been concluded that there is no significant probability of a dangerous situation occurring at the LPTR as a result of the Hydrazine Program testing.

Previous irradiation work at LPTR provided good technical data concerning the chemical yield of hydrazine by the fissio-chemical processing method; the irradiations were, however, limited in number and by operating conditions so that optimization of parameters could not be effected. The LPTR irradiation work must be continued to determine design criteria for a continuous in-reactor production and processing loop with the desired operating capabilities.

The capsules used previously for LPTR irradiations have been modified slightly to maintain desired operating conditions. The basic equipment, however, remains the same: a primary pressure vessel containing liquid ammonia and uranium in intimate contact, and a secondary pressure vessel for containment. A layout of a modified capsule is shown in Figure 1. A flow sketch of the capsule is shown in Figure 2.

The primary vessel is divided into a lower reaction chamber and an upper gas chamber and is fitted with the necessary sample lines and instrumentation. In addition, it contains a screw-type stirrer for suspending the uranium fuel uniformly in the liquid ammonia during the irradiation. This stirrer is driven through a magnetic coupling by a motor located in the secondary containment vessel.

The secondary vessel surrounds the primary vessel and provides an expansion volume to contain the test chemical mixture in the event of a failure in the primary vessel or associated lines and fittings. In addition, the secondary vessel houses the stirrer motor, the sample lines and valves, the instrumentation leads, the pressure transducer and a coolant water circulation system. The electrical instrumentation leads and coolant water leads are brought out through the secondary vessel by glands which are pressure and water tight. The cover gas in the secondary vessel will be nitrogen at a pressure of 30 psia.

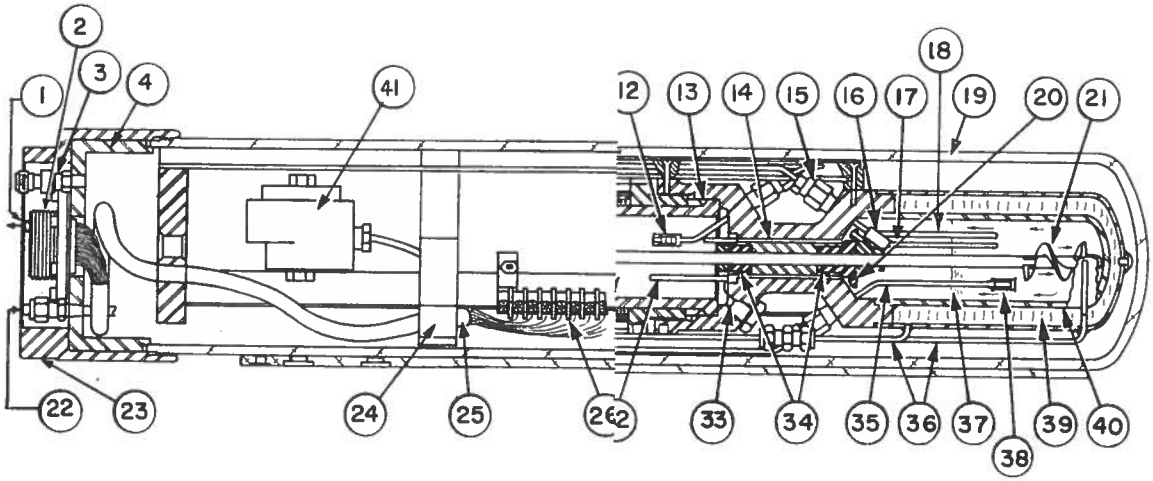

FILTER

ESSURE VESSEL

RE SWITCH

FIGURE 1

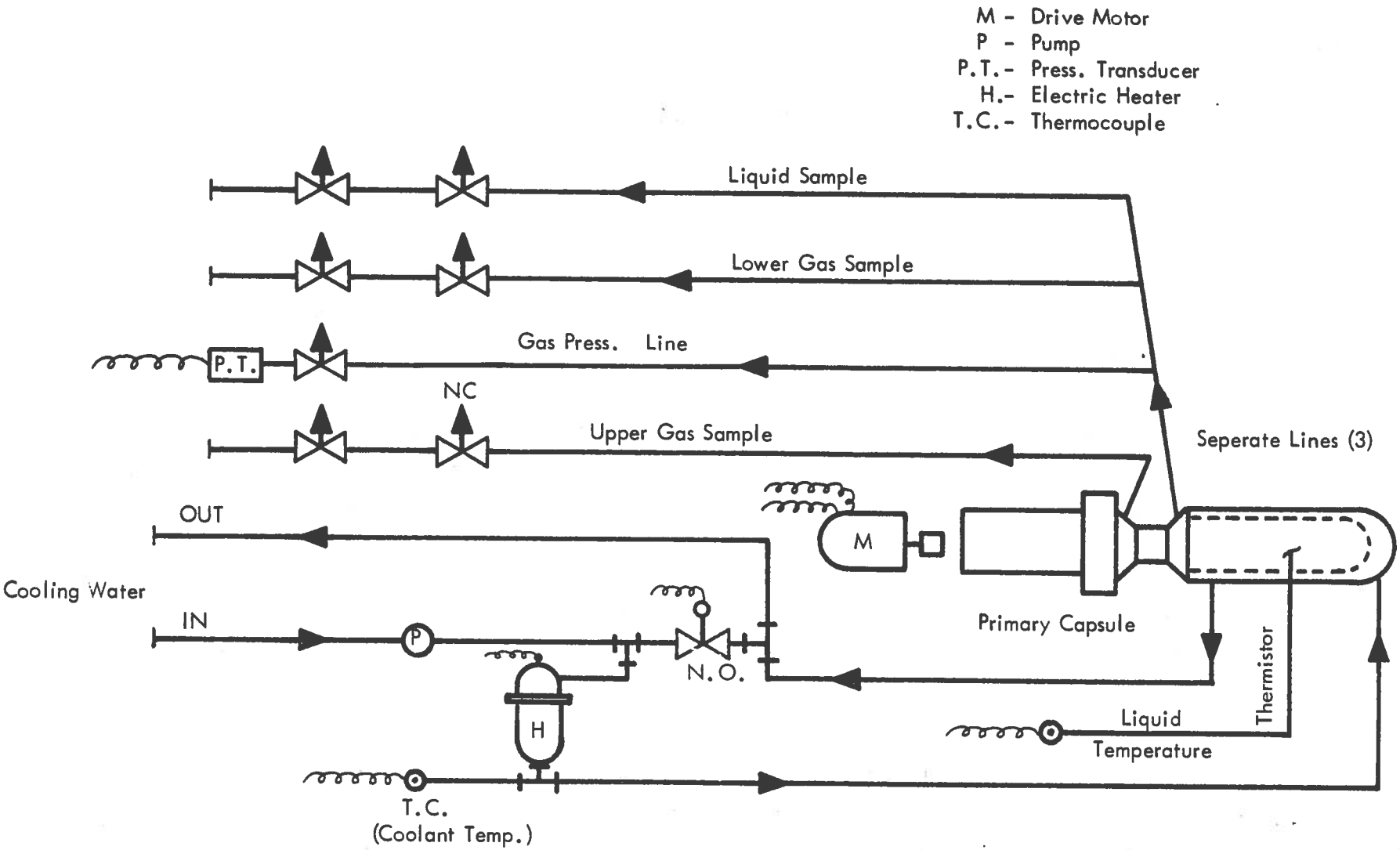

FIGURE 2

P & I DIAGRAM FOR SECONDARY CAPSULE HYDRAZINE LOOP

The existing AGN irradiation port installed in the LPTR for the NNFR tests* in 1959 will again be used to position the test capsule adjacent to the reactor core for irradiation. Figure 3 illustrates the position of the test capsule in relation to the LPTR construction.

Operating procedures are modified in several respects. First, no sampling operations will be performed at the LPTR; previous irradiations indicate that adequate analytical information can be obtained by allowing the capsule activity to decay and returning the capsule to AGN for sampling. Second, in the interest of economy and ease of scheduling, the capsule will be withdrawn from the irradiation port during reactor operation. Storage of an irradiated capsule will be in the upper section of the irradiation port with the top of the capsule just above the pool water surface. Third, although transport of capsules into and out of the LPTR area will again take place during scheduled reactor maintenance periods (Monday mornings), the capsule irradiations may take place on subsequent weekday mornings at normal reactor startup time. This is in the interest of both economy and to enable analysis of relatively short lived fission products.

Transfer and receipt of accountable SS material will be made with the approval and under cognizance of the San Francisco Operations Office USAEC. Transfer will take place in the same manner as in the first phase of this program.

---

*Nuclear Nitrogen Fixation Reactor, AEC Contract No. AT(04-03)-251

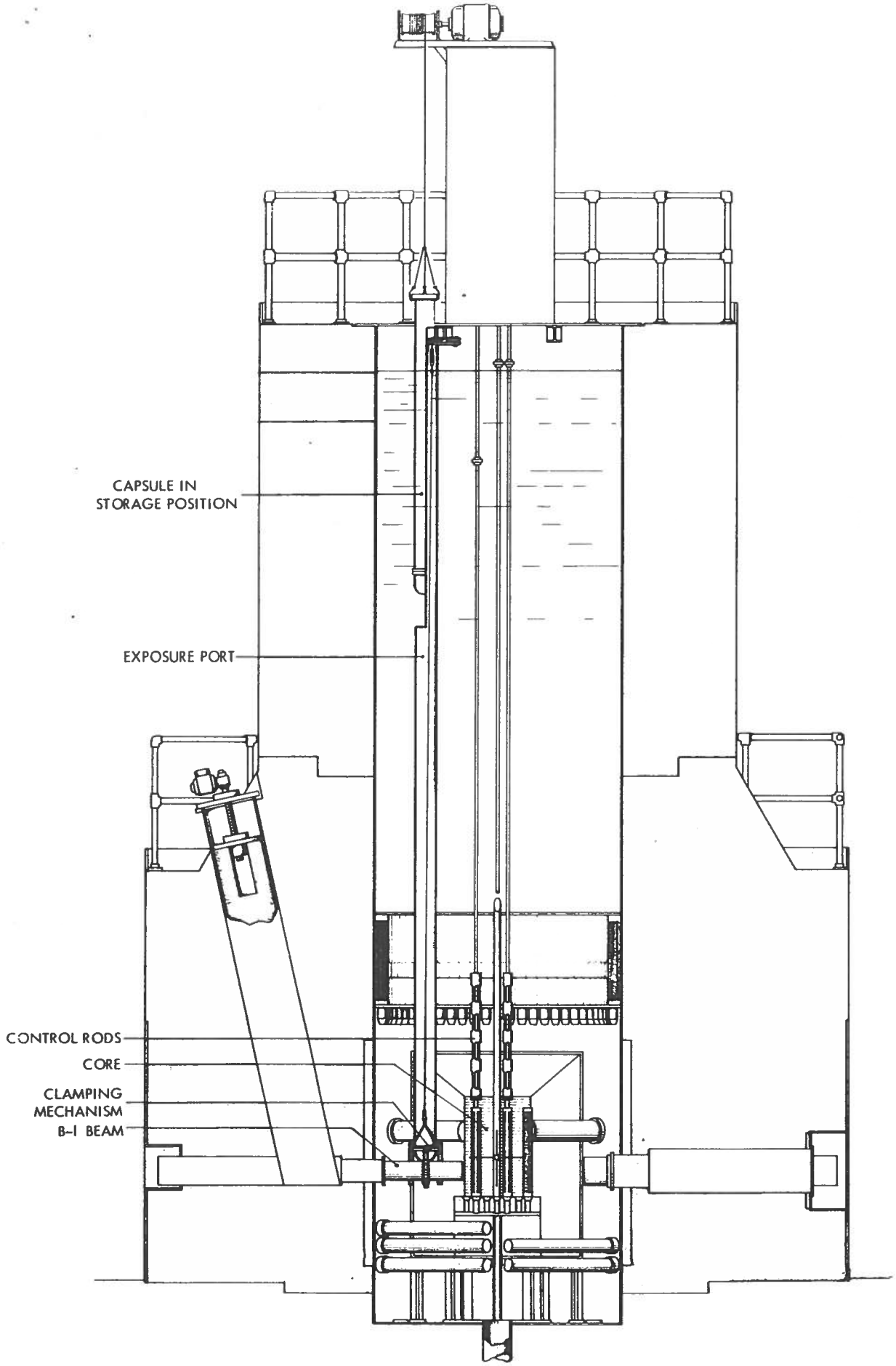

HYDRAZINE LOOP INSTALLATION IN LIVERMORE POOL TYPE REACTOR

FIGURE 3

II. DESCRIPTION OF THE HYDRAZINE PROCESS DEVELOPMENT PROGRAM

A. PURPOSE OF THE PROGRAM

The economic use of nuclear energy for chemical production has been under study for many years. The fissio-chemical production of anhydrous hydrazine from liquid ammonia was first discussed and economically appraised by Aerojet-General Nucleonics in 1958.* It appeared that a chemical production nuclear reactor consisting of a suspension or solution of fissile material in liquid ammonia could produce hydrazine by means of fission fragment irradiation at a cost substantially below that obtainable from the conventional process. Preliminary plant design and economic calculations were based on a G-value, or yield, of 1 molecule of hydrazine produced per 100 electron volts of fission fragment energy deposited in ammonia. These calculations predicted an amortized hydrazine production cost of about 35 cents per pound. A somewhat higher yield seemed entirely possible, with a corresponding drop in price to 15 to 25 cents per pound.

This paper study assumed the successful solution of the many problems involved. One of the major requirements for the success of this process was an adequate yield; the first phase Air Force-funded Hydrazine Program** thus had yield determination as its primary goal. G-value determinations (molecules of hydrazine formed per 100 electron volts of energy deposited) were made in a series of instrumented capsule experiments in the 2 Mw Livermore Pool Type Reactor (LPTR) starting in December 1960. Prior to this date, relatively crude hydrazine production experiments were conducted in the 5 watt AGN-201M reactor. Wherever data for these experiments indicated a range of values, that value resulting in the lowest yield was chosen. Thus, the G-values of 1.2 to 2.4 resulting from the four AGN-201M experiments were conservative. On the basis of the preliminary plant design, this yield range is equivalent to a product price of 33 to 20 cents per pound. The more precise LPTR runs resulted in G-values as high as 1.7, thus confirming the early yield data. The first phase of the program was completed with the issuance of a final report.***

The success of these initial studies led to the formulation of a complete program which could lead to the large scale fissio-chemical production of hydrazine. The current 30-month study is the second phase of this four-phase program. It has as its major goal the development, design, construction and operation of a continuous in-reactor loop with its associated fuel handling and product purification sections. Direct support work necessary for the development of the loop and its components includes studies in decontamination, purification, fuel cycle, materials, chemical and energy deposition analysis, and reactor physics. Basic radiation chemistry studies will be undertaken to extent the application of this process.

---

*AGN-3011, Nuclear Hydrazine Production Reactor, December, 1958

**AF Contract No. 33(600)-40878, April 4, 1960 through May 1, 1961

***Nuclear Hydrazine Program, ASD Technical Report 61-7-840, July, 1961

III. DESCRIPTION OF LIVERMORE POOL TYPE REACTOR FACILITY AND LRL-AGN LIAISON

A. LPTR FACILITY AND ADMINISTRATION

The LPTR is a 2 Mw solid fuel, light water moderated and cooled reactor of the pool type, having nuclear properties similar to the LITR, ESF, and OWR. The standard fuel elements, approximately 3 in. by 3 in. in cross section and 34 in. long, contain from 140 to over 169 grams of U^{235} each. They are assembled with top and bottom open to permit coolant water to flow between the plates.

The control-rod-receiving fuel elements are similar to the standard type except for slots provided for the entry of the control rods. These slots are obtained by removing half of the fuel plates, thus providing apertures of 1-1/8 by 2-1/2 in. This special fuel element contains 95 grams of uranium.

The LPTR is controlled by five absorber rod elements, four of which are B_4C shim-safety rods. The fifth is a stainless steel regulating rod. Experiments on the ESF indicate that each of the shim-safety rods is worth about 2.5% in reactivity. The actual worth will depend on the fuel loading and the absorber rod position. The regulating rod is worth about 0.5% in reactivity.

When the reactor is scrammed, holding magnets which ride within magnet guide tubes attached to the special element release the absorber rods, which fall by gravity into the core through the special fuel elements. The fall of the rods is cushioned by shock absorbers which also act as the magnetic armature. The magnets release the control rods within 20 milliseconds after the scram signal is received and the release is indicated by a micro-switch contact located on the magnet. The regulating rod, not being held by a magnet, does not participate in the scram.

The top of the reactor pool is enclosed by 1/4 in. steel plate which can be removed in sections to permit refueling, inspection and maintenance, as well as installation of the AGN Hydrazine Program capsules and equipment. The cover plates direct radioactive gases produced in the reactor into the ducting system, and since the plates are also fastened to other structural members, they provide some deterrent to expulsions from the reactor, although they are not primarily intended as a pressure seal. This structure must be removed to perform maintenance and refueling operations on the core.

Three feet above the reactor core, attached to the tank wall, are located the spent fuel element storage racks. These are provided to allow fission product activity to decrease before fuel elements are stored in the floor facility or are returned to chemical processing.

Shielding at the reactor room floor level is provided by the demineralized water in the tank, the 2-1/2 in. lead section six feet high, and magnetite concrete six feet thick. The magnetite concrete section extends 11 feet upward where it tapers to three feet at an elevation of

13 feet. The 12-1/2 feet from this point to the top is formed of ordinary concrete. All concrete sections in the reactor room, the floor, the foundation pad, the igloo blocks, as well as the reactor shield are reinforced with steel equivalent to 1% of the area for earthquake resistance.

Existing experimental facilities provided are: central thermal flux trap, two thermal columns, two horizontal beam holes, horizontal thermal port, four radiation ports, and three pneumatic tube systems.

The Hydrazine Program in-reactor capsules will utilize the special access port which AGN designed and installed in 1959 for the NNFR micro-loop capsule. This exposure port is 6 in. in diameter by about 22 feet long and extends from the top grid plate of the reactor pool to a position near the reactor core. Construction is of seamless aluminum tubing.

The mounting of this tube is so designed and installed that lateral currents from the water in the reactor pool will not tend to misalign the tube. The present mounting of this exposure port at the top of the reactor pool will be modified as necessary to accommodate the Hydrazine Program test capsules.

The LPTR facility is housed in an insulated, air tight, steel reactor building. This primary function is to prevent radioactive reactor effluents from reaching the surrounding environment. The personnel airlock connects the personnel passage between the laboratory and the reactor building. Normal reactor building ventilation air is provided by an air conditioning plant which includes 15% make-up air. Then 15% of the ventilation air is discharged to the atmosphere through suitable filters in the top of the reactor building. The building is provided with a decontamination system for use in emergencies.

The main loop cooling system circulates at 1000 gallons per minute through the core in a downward direction. The heat exchanger has a design capacity of 7.0 million Btu per hour. A bypass stream of approximately 7 to 8 gallons per minute is withdrawn continuously from the main loop and introduced into an ion exchange demineralizer and filter unit. Cooling water for the micro-loop is available from the pool water circulating through the open ended beam port.

All information pertaining to the LPTR with regard to hazards report analysis is on file with the AEC under Hazards Report FW-56-006 and Addenda I, II, III and IV.

The LPTR administration is under the direct control of the LRL Nucleonics Division Head with direct supervision under the Reactor Facilities Supervisor. A Program and Safeguards Committee composed of members of the supervisory staff must approve all experiments to be conducted in the LPTR. Aerojet-General Nucleonics personnel will inform LPTR administration regarding all proposed equipment, procedures, and experimental operations. In addition to many discussions regarding design of equipment for the Hydrazine Program experiments, this report will serve as a basis for official records regarding AGN's proposed experiment.

B. ORGANIZATION OF AGN PERSONNEL AT THE LPTR FACILITY

The AGN work at the LPTR Facility falls into the following three categories:

(1) Installation of test equipment

(2) Test operation

(3) Removal and disassembly of test equipment

The maximum number of AGN personnel required at the LPTR facility for each of these operations is three.

An AGN supervisor will be present during each of these operations and will take full responsibility for the action of the AGN personnel. This AGN supervisor will work closely with the LPTR representative designated to oversee the AGN operation.

All AGN work at the LPTR Facility will be performed in accordance with the detailed procedures which have been approved by the LPTR Facility and AGN. Any deviation from the approved procedures will be immediately referred to the LPTR representative. No deviations will be pursued until LPTR approval has been obtained. In addition, the right of the LPTR representative to stop or reorient the AGN work at any time will be rigidly respected by the AGN supervisor. If any disagreement occurs, the work in question will be stopped until agreement has been reached.

C. INSTALLATION AND OPERATION OF THE HYDRAZINE PROGRAM TEST EQUIPMENT

This section provides a general description of the Hydrazine Program test equipment installation at the LPTR Facility. The detailed installation procedures are covered in Section V.

In addition to the AGN experiment port which now exists in the LPTR, the Hydrazine Program test equipment consists of the following parts: (1) two in-reactor capsules, (2) a control panel, and (3) an electrically operated hoist.

Transfer, receipt and handling of SS material in the test capsules will be done in accordance with the provisions established by the Commission as set forth in the USAEC Manual, Chapters 7401, 7402, 7403 and 7450. Transfers between AGN and LRL will be made under the cognizance of, and approved by, the San Francisco Operations Office, USAEC.

The control and instrumentation panel will be located between the platform walkway and the top deck of the reactor. This panel will occupy about 3 sq ft of platform space. All connections from the control panel to the test capsules will be disconnected during non-test periods.

IV. IN-REACTOR CAPSULE DESIGN

Table II summarizes the design specifications for the Hydrazine Program test equipment.

TABLE II

Equipment	Size	Base Material	Net Weight
Primary Vessel	3.5" OD x 15" long	304 and 347 SS	15 lbs
Secondary Vessel	5.563 OD x 60" long	Aluminum 6061-76	40 lbs
Exposure Port	6.625" OD x 22' long	" " "	150 lbs
Control Panel	19" x 26" x 12"	" " "	60 lbs
Combined Weight of the Assembled Capsule and the AGN Hoist			**250 lbs**

Vessel	Content: Liquid	Content: Gas	Content: Fuel
Primary Vessel	Liquid Anhydrous Ammonia	N_2, H_2, He, Kr, etc. gases	UO_2 or other enriched fuel
Secondary Vessel	None	Nitrogen	None

Test Conditions	Temperature	Pressure
Primary Vessel	Pool Temp. to 160° F	150-600 psig
Secondary Vessel	Pool Temp. to 120°	15 psig

The primary vessel is located adjacent to the core in the water reflector about 18 in. from the side and over the B-1 beam port. Thermal neutron flux inside the primary vessel is approximately 10^{11} n/cm^{2}sec when the LPTR is at a power level of 2 Mw.

A. THE PRIMARY VESSEL

The primary vessel shown in Figure 1 is designed to fit into the secondary vessel and consists of two coaxial cylindrical chambers connected through a narrow section. The lower chamber contains the chemical mixture to be irradiated and a helicoidal screw type stirrer. This lower chamber is connected to the upper chamber by several vents and risers which pass through the necked-down section. The upper chamber contains the lower part of the stirrer magnetic coupling and provides an expansion volume for ammonia vapor. The connecting section houses the bearings for the stirrer shaft and provides room for the location of the 12 ports (instrumentation

and sampling) to the primary vessel. The Bridgman type closure seal for the vessel is located in the upper chamber. This type of seal takes advantage of the vessel internal pressure which tends to force the seal tighter. The seal ring which is deformed to make the seal will be made of soft aluminum.

A rupture disc tested to 1250 psi and designed to withstand 2000 psi is installed in the vapor space of the primary.

The base material of construction for the primary vessel is type 347 stainless steel and the stirrer is type 304. These were selected because (1) they contain none of the metals which promote the decomposition of hydrazine (e.g., molybdenum and copper), and (2) they are nonmagnetic and will not interfere with the magnetic stirrer coupling.

The stirrer device rotates on stainless steel ball bearings operated dry.

The design operating pressure and temperature for the primary vessel are **165 to 615 psia** and room temperature to 160°F, respectively. Under these conditions, with a minimum wall thickness of 0.154 in., the maximum design stress in the vessel is 13,000 psi (occurs in upper cap) which is well below the allowable stress of 18,750 psi. Design details and stress calculations are included in Appendix A. Heat generation and transfer calculations are included in Appendix B.

The six connections to the primary vessel consist of two thermocouples, one pressure tap and three sampling lines. Each of these is connected to the primary vessel by a high pressure fitting.

The temperature of the primary vessel is controlled by one 40 watt electrical heater around the upper vapor chamber and one 120 watt immersion heater located in the water coolant circuit. The latter heater will control the temperature of the water in the water jacket around the primary vessel and will be actuated by a thermistor in the liquid of the primary vessel.

The normal chemical loading of the primary vessel before irradiation is 200 ml of liquid ammonia, ammonia vapor, 4 to 10 grams of enriched UO_2 fuel and an approximately 20 psi overpressure of N_2, H_2, Kr, He or other gas. The cover gas functions primarily as a carrier for the fission product gases. It is also desired to increase the pressure of the nitrogen and hydrogen gases by approximately 100 psi during some irradiations.

B. THE SECONDARY VESSEL

The secondary vessel (also shown in Figure 1) provides double containment for the chemical solution in the primary vessel. In addition, it houses:

(a) the stirrer motor (universal type adjustable speed) which drives the primary vessel stirrer through a magnetic coupling

(b) the pressure transducer (Bourdon tube type coupled to a potentiometer) for the primary vessel pressure,

(c) the sample lines and valves to the primary vessel,

(d) the instrumentation leads,

(e) five spacers,

(f) water lines to the primary vessel coolant jacket,

(g) the water pump, water heater, and coolant system, and

(h) differential pressure switch.

The secondary vessel is fabricated from 5 in. diameter schedule 40 aluminum alloy (6061-T-6) pipe and is about 5 ft long. The normal operating temperature and pressure of this vessel are 115°F and 30 psia. However, this vessel is designed to contain a pressure of 3850 psi before it will yield. If the entire ammonia contents of the primary vessel were released to the secondary vessel and it entirely dissociated to hydrogen and nitrogen, the resultant secondary pressure would only be 445 psia. Stress calculations for all of the pressure vessels are included in Appendix A.

The secondary vessel contains guide rails and locating rings for the support and positioning of the primary capsule. The head seal will be made with a neoprene O-ring. The instrumentation leads and coolant water leads are conducted through the secondary vessel cap by watertight seals. In addition, on the cap there is a connection for sampling the gas in the secondary vessel and a ball-check pressure tap to accept a plug-in pressure gage to measure the secondary vessel gas pressure. These connections are used to verify that the primary system has not failed, and that it is safe to open the secondary container to take samples from the primary vessel.

Two water lines extend from the LPTR pool into the head of the secondary vessel to a heat exchanger and then to the water jacket around the base of the primary vessel. Water will be pumped through this system to maintain control of the temperature of the primary vessel.

During operation and storage, the secondary vessel will be filled with nitrogen gas to a pressure of 30 psia. A pressure gage installed in the secondary capsule head will be used to insure maintenance of this pressure. This nitrogen cover gas is used to preclude a combustible hydrogen or ammonia mixture which would form if a leak occurred and air were present in the secondary vessel. This nitrogen atmosphere will be established by purging until there is less than 0.1% oxygen present, as determined by gas chromatography analysis. A copy of each such oxygen analysis will be given to the LPTR reactor operator for each capsule which is brought to the LPTR. In addition, this 30 psia secondary nitrogen pressure provides about 4 psi over-pressure with respect to the pool hydrostatic pressure at the irradiation position depth.

C. CAPSULE TEST PORT, STORAGE POSITION AND SUPPORT WINCH

A specially designed exposure port (see Figure 3) has been installed in the reactor pool. This exposure port is made of an aluminum pipe 22 ft long, 6.625 in. O.D. with 0.280 in. wall. The port extends from the deck plate at the top of the reactor pool to a position near the reactor core.

The mounting of this tube is designed so that lateral currents from the water in the reactor pool will not misalign the tube. The upper end of the tube is attached to one of the I-beams supporting the deck plates, while the lower end is equipped with an ice tong attachment which permits clamping over the B-1 beam tube. The position of the port is such that the primary vessel in the capsule is approximately at the center line of the core. The top 8 feet of the tube has half of its section removed to permit bringing the capsule out of the exposure port without raising it above the pool water level.

The winch will be located at the top of the reactor control rod cab. This device will function as the primary support for the capsule. The LPTR crane will be used as a safety support device during insertion, irradiation and removal of the capsule. During storage of the capsule, the safety line will be tied off to a structural member of the reactor, allowing free usage of the LPTR crane. The maximum downward deflection of the I-beam supporting the control housing, due to the weight of this winch and the test capsule, is 0.0025 in. (see Appendix A). This small deflection should cause no reactor control problem.

D. INSTRUMENTATION AND CONTROLS

The control panel is planned for location on a small platform between the reactor top deck and the catwalk. It will be oriented for operation from the reactor top deck.

A schematic diagram of the electrical system is shown in Figure 5. The instrumentation leads are fitted with a water-proof plug type connection which can be connected to either of the in-reactor test capsules.

The following control and readout instrumentation is installed in the control panel.

1. Heater Control

A Fenwall temperature indicator-controller indicates the temperature of a thermistor located in the liquid ammonia. The controller part actuates the power to the 120 watt immersion heater in the coolant circuit.

2. Temperature Read-Out

The following thermocouples are read out on a Wheelco Indicating Pyrometer which is equipped with a 6-point switch:

#1 Temperature of the upper vapor phase of the primary vessel

#2 Inlet water temperature to the primary vessel coolant jacket

#3 Temperature of the primary vessel wall

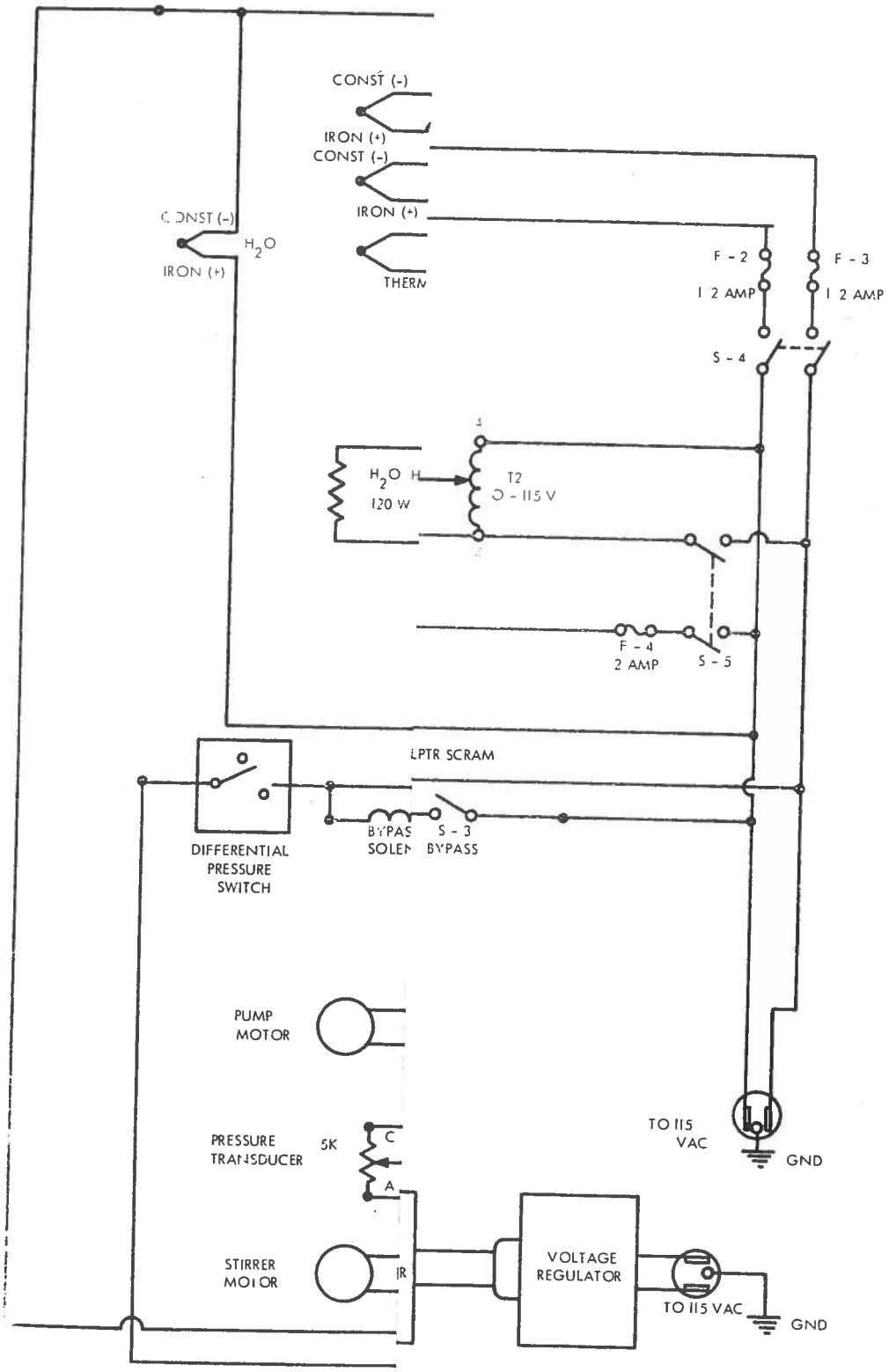
CONST (-)
IRON (+)
CONST (-)
IRON (+)
THERM
CONST (-)
H_2O
IRON (+)
F - 2
1 2 AMP
F - 3
1 2 AMP
S - 4
H_2O
120 W
T2
0 - 115 V
F - 4
2 AMP
S - 5
LPTR SCRAM
DIFFERENTIAL
PRESSURE
SWITCH
BYPAS
SOLEN
S - 3
BYPASS
PUMP
MOTOR
PRESSURE
TRANSDUCER
5K
C
A
TO 115
VAC
GND
STIRRER
MOTOR
IR
VOLTAGE
REGULATOR
TO 115 VAC
GND

3. Pressure

The electrical signal from the pressure transducer which senses the primary vessel pressure is fed to a Hycon digital ratiometer mounted on the control panel. This instrument is a self-balancing bridge which indicates the ratio of output to input voltage across the potentiometer. This reading is in turn converted to psig by a calibration chart. The instrument has a range of 0-615 psia or 0-1015 psia when used with different transducers.

4. Stirrer Speed

The stirrer motor has a power rating of 1/7 hp and drives the stirrer, located in the primary vessel, by a magnetic coupling. A variable transformer is mounted on the control panel to set the speed of this motor from 0 to 10,000 rpm. This circuit also includes a voltmeter and ammeter which is calibrated in terms of motor speed, thus making it possible to reproduce the optimum speed found during circulation experiments.

5. Coolant Circuit Control

The water coolant circuit consists of an inlet for LPTR pool water, a pump, a heat exchanger, a solenoid operated by-pass across the heat exchanger, a thermostatting jacket around the primary vessel, and an outlet to the LPTR pool. The temperature of the water entering the thermostatting jacket will control the power applied to the heating element in the heat exchanger. The by-pass will be operated manually as required to control the thermostatting jacket temperature during rapid temperature changes.

6. Differential Pressure Transmitter

A differential pressure switch (Meletron Model 462) has been installed in the secondary capsule vapor space. The purpose of this switch is to provide a signal light and relay for the LPTR scram system if the primary capsule should rupture and discharge ammonia into the secondary capsule. If such an ammonia release occurs, the secondary pressure will immediately increase from the 30 psia cover gas pressure to about 45 psia, and within one minute will reach a final pressure of about 100 psia. The pressure switch is internally referenced to 15 psia and is set to close if the secondary pressure exceeds 42 psia. When the switch closes, a light goes on on the AGN Contral Panel and the relay to the LPTR scram system is closed.

E. FLUX MONITOR

The neutron flux in the capsule region is to be monitored by the use of a 1 mil gold wire placed around the secondary capsule (Figure 6). The wire is held in place by means of a snap-on ring holder designed so that the wire is in a reproducible height for each irradiation. The gold wire will be attached at AGN during preparation of a capsule for irradiation and will remain on the capsule until it is returned to AGN for analytical purposes.

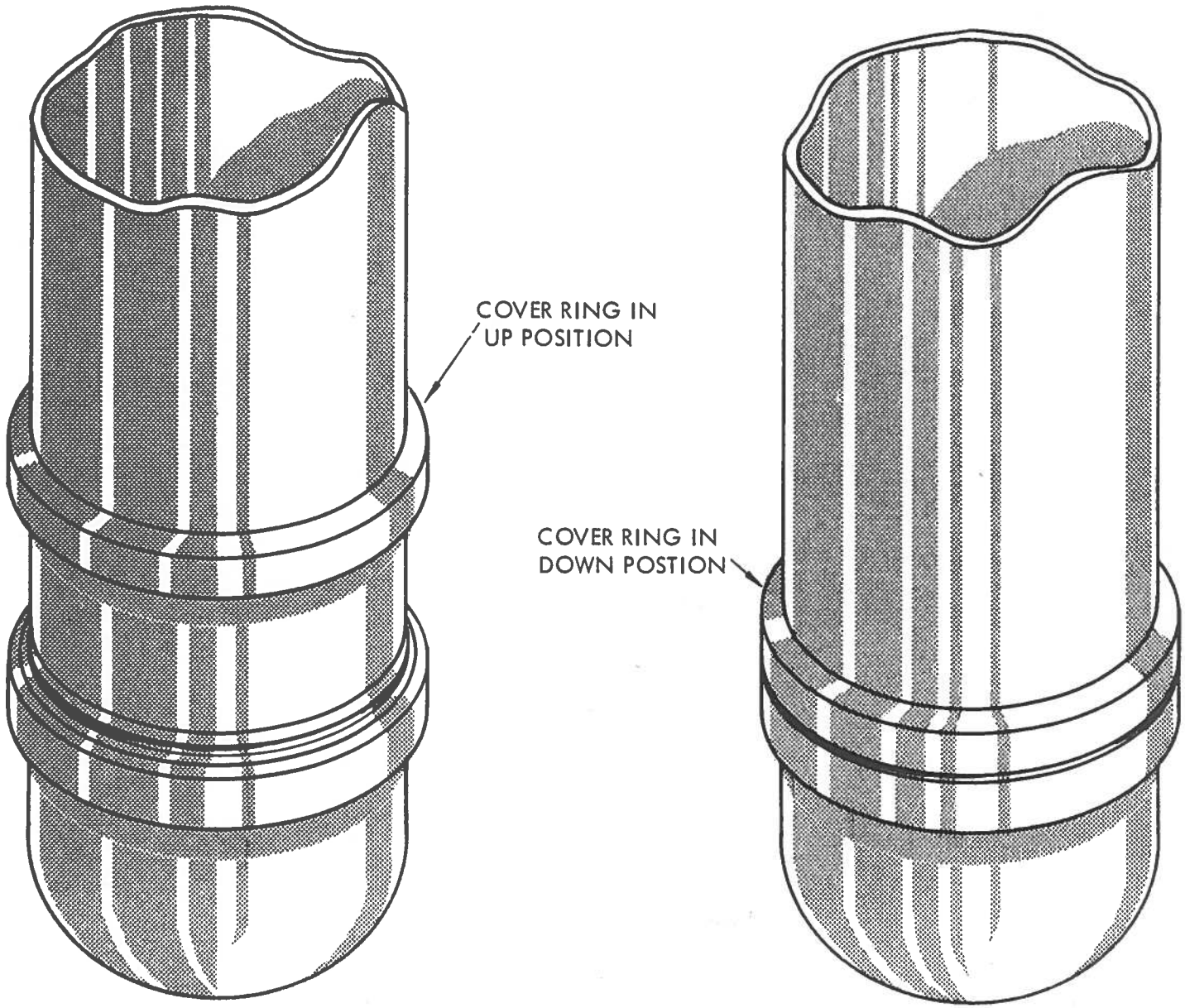

SECONDARY VESSEL AND FLUX MONITOR HOLDER

FIGURE 6